Sunpipe®











Monodraught®

Contents

Page 3	Introduction
Page 4	Technical Details
Page 5	Specification
Page 6	Domestic Applications
Page 7	Listed Buildings
Page 8	Square & Conservation
Page 9	Horizontal & Basement
Page 10	Schools
Page 11	Colleges & Universities
Page 12	Hospitals
Page 13	Health Centres & Homes
Page 14	Technical Matters
Page 15	Technical Matters
Page 16	Offices
Page 17	Industrial & Leisure
Page 18	Daylight on Demand & Ceiling Diffusers
Page 19	Fire Protection & Acoustic Performance
Page 20	Overseas Projects
Page 21	Overseas Projects
Page 22	Secure Establishments
Page 23	WINDCATCHER®
Page 24	SUNCATCHER®
Page 25	SUNCATCHER®
Page 26	ABS SUNCATCHER®

Piping sunlight was first used about 4000 years ago when the Egyptians used light shafts and mirrors to bring daylight down into the centre of the Pyramids. The modern version of light pipes were patented in 1988 and Monodraught recognised the enormous energy saving potential of applying our SUNPIPE® natural daylight systems to commercial properties.

According to the Department of Energy and Climate Change, the UK is responsible for discharging 533 million tonnes of carbon dioxide. Non-domestic buildings are accountable for 18% of the UK's total carbon emissions, and lighting makes up about 23% of this value. The Carbon Trust predicts that cutting carbon in buildings is a 'win-win' opportunity that can save at least £4bn for the UK economy by 2020 and increase the security of energy supplies as well as helping to provide better and more productive buildings.

In Schools alone, Government sources state that 80% of the electricity consumed, is used for electric lighting. By using SUNPIPE natural daylight systems, at least 75% of the electricity used for lighting during daytime use can be saved, and a considerable saving in carbon emissions can be achieved.





Monodraught®

The company was founded in 1974, since then Monodraught has specialised in the development of natural, zero energy products and systems.



©AndrewSouthall/arcblue.com

Monodraught at Bluewater Retail Park, Dartford, Kent.

In 1990 Monodraught launched the WINDCATCHER® natural ventilation system, which encapsulates any prevailing wind. In 1996 Monodraught introduced the SUNPIPE to the UK market. In May 2007, Monodraught Ltd was incorporated into the Danish company VKR Holding which includes such brands as VELUX roof windows and VELFAC WINDOWS.

A significant feature of the Monodraught product range has always been the high level of architectural design empathy, producing visually appealing designs while achieving an efficient and practical contribution to the optimum harnessing of our natural resources.

The Original Patent

Patent No. 5,099,622 was originally granted to a British inventor, Stephen M Sutton in Oakhurst, Australia on November 22nd, 1988.

The invention was described as, "a system having a tubular body with a transparent cover to prevent the ingress of dust and with a second transparent cover locating at ceiling level and attached to the tubular body. The composition of all components prevents excess air movement, which creates a static column of air within the tubular skylight. This column of air acts as an insulator which prevents heat from entering the room or conversely in winter from escaping from the room".

The system has been a remarkable success in both Australia and North America as a highly effective method of conveying natural daylight from roof level down to the room below.

Monodraught has greatly improved the original system and has filed five new Patents covering these improvements. All Monodraught SUNPIPE natural daylight systems are manufactured in the UK and are complemented by a wide range of ancillary products all based on the same concept of energy saving innovations.

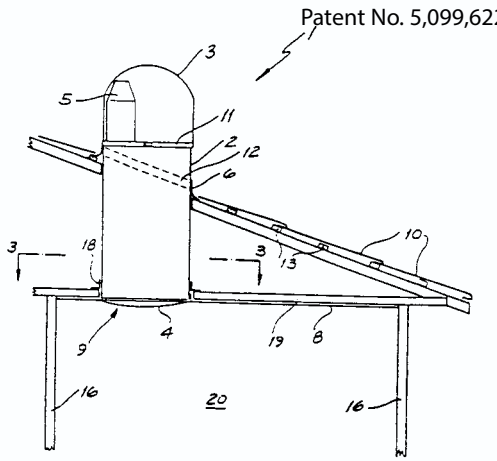

Original Patent



Monodraught also has a range of SUNPIPE natural daylight systems manufactured using material that is made from more than 90% of recycled aluminium which makes this already sustainable product even more environmentally friendly.

The performance of these recycled aluminium SUNPIPE natural daylight systems will remain unchanged as the silver mirror finish is the same.



The patented SUNPIPE diamond dome (Patent No. 0200543.7), introduced in 2002, is available on the six most popular sizes 230mm, 300mm, 450mm, 530mm, 750mm and 1000mm nominal). Some of the photographs or illustrations in this brochure are of the earlier hemispherical design that is continued on larger bespoke sizes.



Technical Details

Description

This system maximises the concept of renewable energy by reflecting sunlight and normal daylight, down through a pure silver base mirror-finish aluminium tube.

A clear UV stabilised polycarbonate top dome seals the light pipe against the ingress of dust, and a smooth opaqhe finish or plain opal diffuser at ceiling level evenly spreads light into the room or space below. The SUNPIPE® natural daylight system is highly effective in both sunny and overcast conditions and even when it is raining.

There is virtually no limit to the length of SUNPIPE or the number of bends that can be used, although a reduction in performance will be experienced, the SUNPIPE carries a 10 year guarantee.

Composition

The SUNPIPE consists of a high purity 98% silver coated aluminium tube, which has a 10 year guarantee against discolouration. This specular aluminium surface is coated with PVD and the presence of a UV inhibitor provides outstanding QUV durability with no decrease in total reflectance and the special surface treatment provides excellent colour rendition of natural light.

A brushed nylon gasket at the top of the system allows the system to breathe preventing condensation problems, whilst the diffuser at ceiling level seals against the ceiling. All vertical joints are sealed with aluminium tape.

Top Domes

Top domes are available in UV stabilised polycarbonate as standard or are supplied in impact resistant modified acrylic (ICI Perspex), where SUNPIPE natural daylight systems are to be used in a harsh UV prone environment such as the Middle East. The diamond domes are 4mm thick injection moulded polycarbonate or acrylic.

The Diamond Dome

The diamond shaped dome introduced in March 2002 has proved so popular that all major sizes are manufactured in this diamond shaped design. Diamond domes are designed specifically to maximise the penetration of sunlight through the flat prisms and to capture the early morning and late afternoon sun.



Patent No. 0200543.7

Pitched Roof Flashing

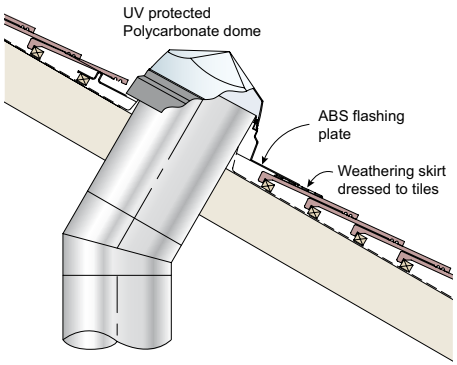



Slate roof

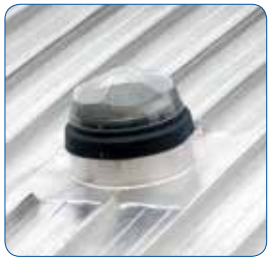

On-site welded upstand to Kalzip type roof with ABS collar

Metal Roofing Profile

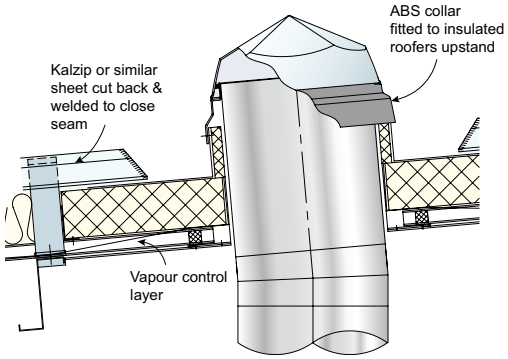

Flat Roof Flashing

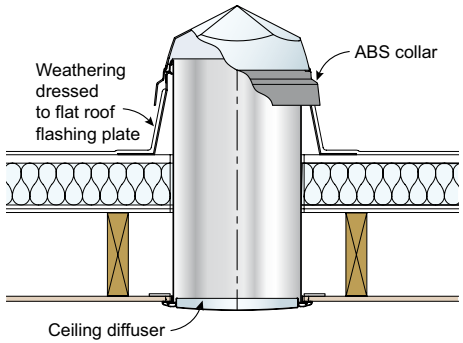

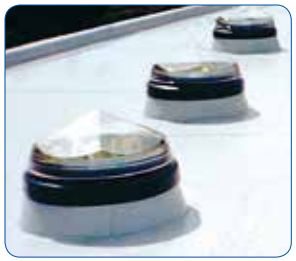

Flat roof application



Alternative GRP upstand for British Steel type colour coated roofing sheet, bonded to surface

Vertical Flashing

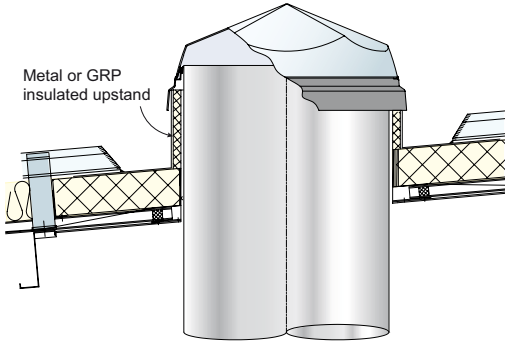

Specification

Additional items

45° adjustable elbow



30° adjustable elbow



Standard 610mm SUNPIPE length



Code 4 lead flashing for bold roll tiled roofs

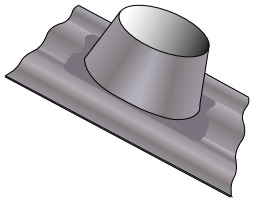

50 watt low voltage integral Light Kit and transformer

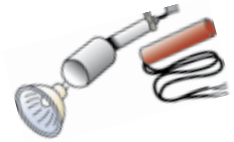

PITCHED ROOF Standard Kit

Polycarbonate diamond top dome

Condensation seal

ABS flashing plate for slate roof

ABS undercloak roofing felt support

610mm long Connecting piece

45° adjustable elbow

610mm Standard SUNPIPE length

Plywood backing plate/template

Bell end slip length ceiling extension

Double Glazed MicroPrism Ceiling Diffuser

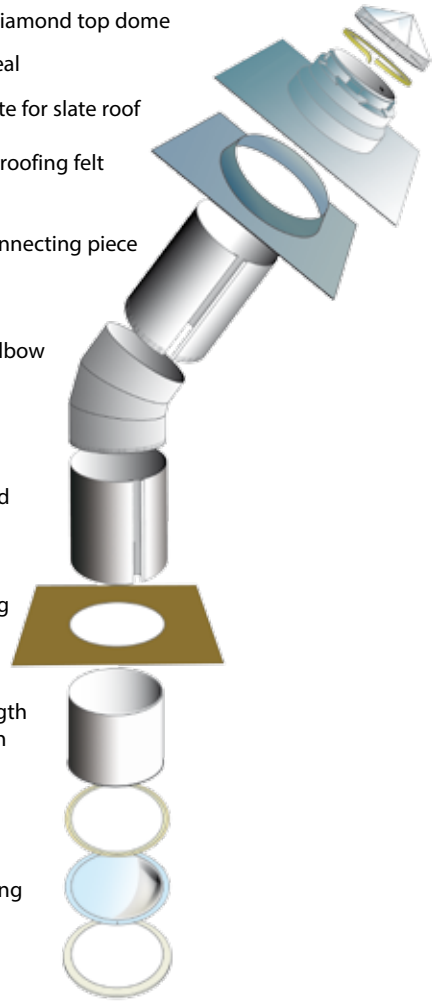

ABS universal flashing plate for tiled roofs with weathering skirt

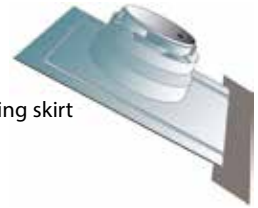

FLAT ROOF Standard Kit

Polycarbonate diamond top dome

Condensation seal

ABS Collar

Galvanised Flashing plate (optional lead)

610mm Standard SUNPIPE length

Plywood backing plate/template

Bell end slip length ceiling extension

Double Glazed MicroPrism Ceiling Diffuser

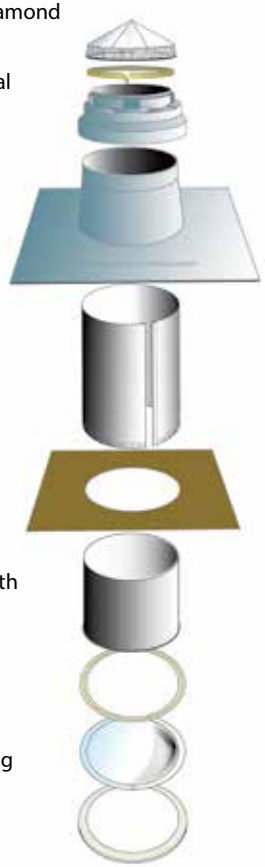



Installation Kit for all systems

Fixing screws & washers, silicone sealant, aluminium tape and installation instructions supplied as standard.

Typical Specification for SUNPIPE natural daylight systems

- Manufacturer: Monodraught Ltd, Halifax House, Cressex, High Wycombe, Bucks, HP12 3SE. Tel: 01494 897700 Fax 01494 532465.
- Type: Monodraught SUNPIPE system.
- Lining: 98% reflectance Super Silver, mirror finish aluminium tube in 610mm lengths.
- 45°/30° adjustable elbows.
- Glazing details: UV protected polycarbonate diamond top domes

or
- Impact resistant modified acrylic diamond top domes.
- Kerbs – ABS one piece universal flashing (for slate roof)

or
- Kerbs – ABS one piece universal flashing (for tiled roof), and integral weathering skirt

or
- Code 4 lead flashing for bold tiled or profile roofs.
- ABS undercloak/roofing felt support

or
- Flat roof: Kerbs: Galvanised flat roof flashing for flat roofs, with ABS top collar
- All necessary fixings, brackets and supports.
- Ceiling finish: Internal three part ceiling diffuser with plastic finish ceiling trim.

NBS Specification available at www.monodraught.com

Domestic Applications

Most popular sizes:

230mm (9" diameter) for shower rooms, toilets and bathrooms up to 7.5sq.m (80sq.ft).

300mm (12" diameter) for stairs and landings, kitchens, studies, living rooms and bathrooms to light up to 14sq.m (150sq.ft).

450mm (18" diameter) for larger areas and for where you want that 'wow' factor, will light up to 22sq.m (230sq.ft).

Advantages

- Generally no structural alterations required, easily fits between joists and rafters.
- No maintenance required and will not leak.
- Top dome is self-cleaning due to its shape and eliminates condensation problems.
- All SUNPIPE® natural daylight systems are guaranteed for 10 years against faulty manufacture.
- Installation can be carried out by most skilled craftsmen and will normally take between 2 to 3 hours.















The SUNPIPE can twist and turn easily to take natural light where you want it.

There is virtually no limit to the length of SUNPIPE or number of bends that can be used and the SUNPIPE can twist and turn easily to take natural light to exactly where you want it.



All bends in the Super Silver aluminium lining are adjustable from 0° to 30° or 0° to 45°.

- Joints are sealed with aluminium tape.
- Few fixings are required, normal single fixing at base of system.
- Top dome is self cleaning, interior pipe needs no cleaning at all.

Listed Buildings

As a result of the increased interest in the application of SUNPIPE natural daylight systems (instead of traditional plastic roof windows), Listed Buildings Officers in Conservation Areas often favour this more discreet SUNPIPE termination, which is available with a low profile dome on all sizes.

Planning Permission

In most cases, it is not necessary to apply for planning permission for the installation of a SUNPIPE, particularly on smaller sizes, since a SUNPIPE of 230mm or 300mm diameter is no different to a flue pipe or chimney flue, which does not require planning permission.

However, if your property is situated in a Conservation Area, specific permission must be sought from your Listed Buildings Officer for the installation of a SUNPIPE. It is not recommended to alter any roof profile or covering without prior permission of the Listed Buildings Officer.

Please also see separate section overleaf on Square and Conservation SUNPIPE natural daylight systems.







SUNPIPE flashing details for tiled roof with ABS upstand to suit a sloping ceiling

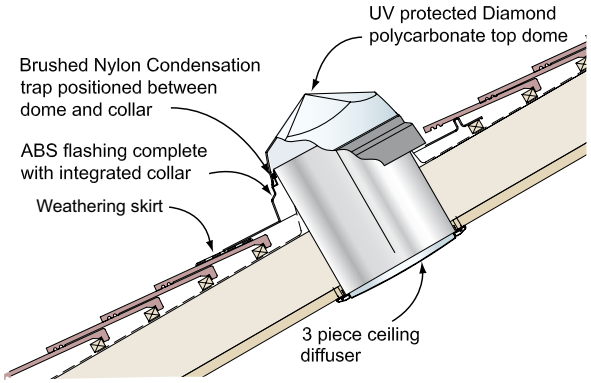

The Gallery SUNPIPE









The Square SUNPIPE System

The Monodraught Square SUNPIPE natural daylight system has been specifically developed to provide an unobtrusive termination for any roof finish.









Rooflight to SUNPIPE

The Square SUNPIPE system comes complete with 475mm x 570mm rooflight, SUNPIPE transition, 45° elbow, extension length, ceiling extension length and diffuser. The system can fit our 300mm (12") and 450mm (18") SUNPIPE tubes, The SUNPIPE systems adjustable elbows enable the system to fit any angle of roof.

- The rooflight finishes virtually flush with the outer roof surface, and is suitable for all types of roof.
- The Square SUNPIPE system incorporates a sealed double glazed unit, with an outer layer of 3mm clear float glass, a 8mm air gap and a 3mm clear float inner glass.
- The system incorporates a square to circular transition unit to fit the SUNPIPE tube.
- The Square SUNPIPE incorporates all the advantages of the SUNPIPE system, but captures more light than the standard system.
- Adjustable elbows enable the system to fit any angle of roof pitch.
- The system terminates in either a circular or square ceiling diffuser.



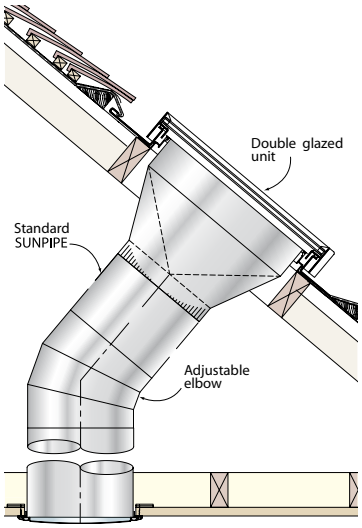



The Square and SUNPIPE natural daylight systems can terminate in either a standard circular diffuser or an optional square diffuser for suspended ceilings.

Horizontal & Basement

Horizontal SUNPIPE

SUNPIPE natural daylight systems have been used for horizontal applications where a south facing wall is used for termination, up to 4 metres has been used successfully.

Advantages

- Brings natural daylight into internal rooms, corridors, store rooms etc.
- Mirror finish elbows turn SUNPIPE through 90°
- Maintenance free installation.
- Easy to install requiring minimum builders work.
- Can suit any wall surface.
- All sizes available.

Basement SUNPIPE

The Monodraught SUNPIPE can also pipe natural daylight to basements, where security bars can also be added.

- SUNPIPE diamond dome can be situated on a flat roof or pitched roof or at ground level.
- The alternative to light shafts.
- Monodraught are members of the Basement Information Centre. www.basements.org.uk









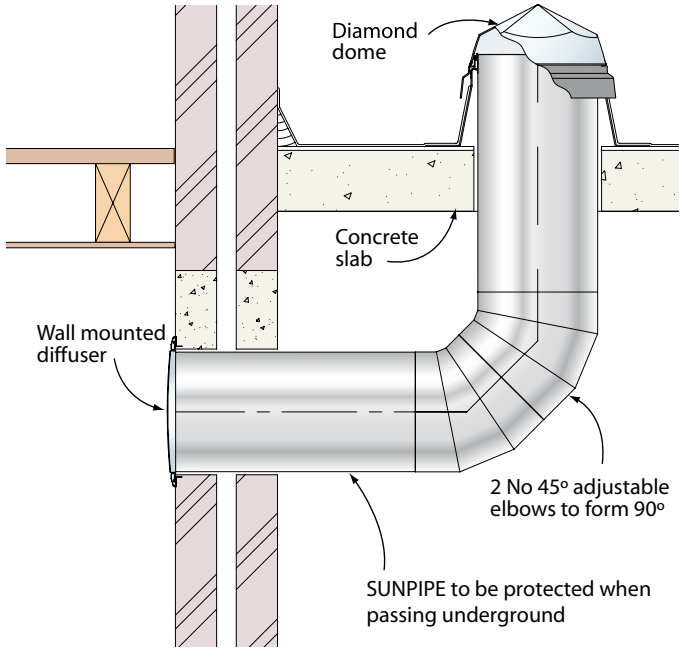





Schools

Most popular sizes:

300mm (12" diameter) for corridors at 3m centres, store rooms, toilet areas and changing rooms to light up to 14sq.m (150sq.ft).

450mm (18" diameter) for wider corridors at 4m centres and small classrooms to light up to 22sq.m (230sq.ft) where ceiling heights are 3m or more.

530mm (21" diameter) the most popular size for deep plan classrooms used in conjunction with WINDCATCHER® natural ventilation systems.

750mm and 1000mm dia. for sports halls and similar areas where floor to ceiling height exceeds 5m.





St. Catherine's School, Newton Abbott



Kingstone High School, Hereford



Trinity School, Bristol



St. Nicholas School, Bristol

Advantages & Benefits

- Enables 4% daylight factor to be met for deep plan classrooms.
- Minimal solar gain in summer months and negligeable heat loss in winter as compared to conventional roof lights.
- No maintenance, inside or out.
- Vandal-proof security domes.
- At least 75% of electricity costs can be saved during the daytime, where SUNPIPE® natural daylight systems are used to replace the need for electric lighting during School hours.
- Children and teachers work better under a natural daylight environment.



Colleges and Universities

Recent Projects completed include:

- Balfour Junior School, Brighton
- Beauchamp College, Leicester
- Belle Vue Girls School, Bradford
- Birchen Coppice Middle School, Kidderminster
- Bognor Secondary School, Bognor Regis
- Dallam School, Cumbria
- Eirias High School, Conwy
- High Clarence Middle School, Middlesbrough
- Highams Park School, London
- Holyport School, Maidenhead
- Huntingdon C P School, Cannock
- King Ethelbert School, Kent
- Laceby Acres Primary School, Grimsby
- Liverpool Hope University
- Lostock Hall C P School, Preston
- Manorfield Primary School, London
- Netherhall School, Cambridge
- Northfleet Technology College, Gravesend
- Old Castle Primary School, Bridgend
- Parkhill Primary School, Fife
- Quarry Brae Primary School, Glasgow
- Queen Elizabeth's Grammar School, Derbyshire
- Sevenfields Primary School, Swindon
- Solihull College
- St Paul's Academy, London
- St Stephen's School, Blackburn
- Surrey University, Guildford
- University of Aberdeen







Manchester University





Tamworth College

450mm SUNPIPE, 7.6m long, serving ground floor lobby at South Charnwood School

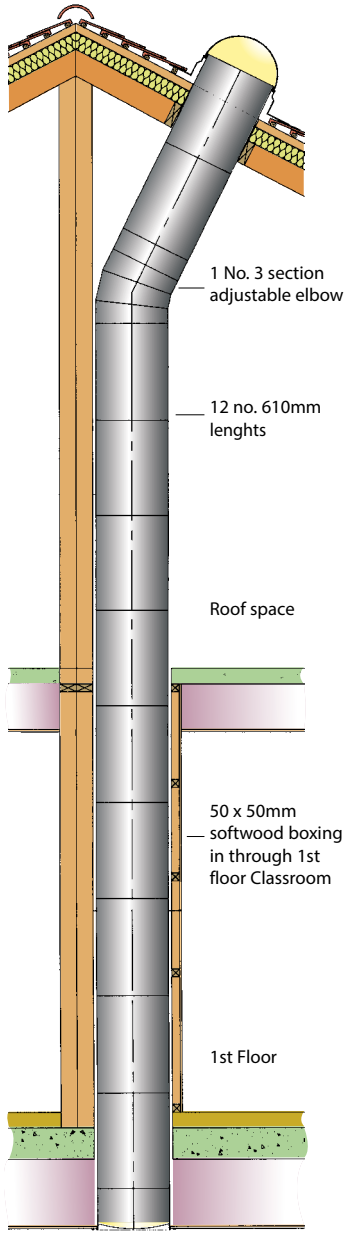

Hospitals

Most popular sizes

300mm (12" diameter) for internal corridors and store rooms.

450mm (18" diameter) for consulting rooms, waiting areas, larger offices.

530mm (21" diameter) for floor to ceiling heights of up to 5m.

Advantages & Benefits

- Energy saving – typical calculations show a pay-back period of 5 to 6 years where SUNPIPE® natural daylight systems are used to replace the need for electric lighting during daytime use.
- Health Benefits – natural daylight is known to combat the condition SAD, particularly suitable for Day Centres and Old Peoples Homes.
- Monodraught provide a complete installation service with all necessary attendances.
- No maintenance – the shape of the top dome ensures that dust and dirt is washed off naturally and internal ceiling diffusers require no maintenance.





Frenchay and Poole Hospitals

Upstand detail for SUNPIPE system for a standing seam roof

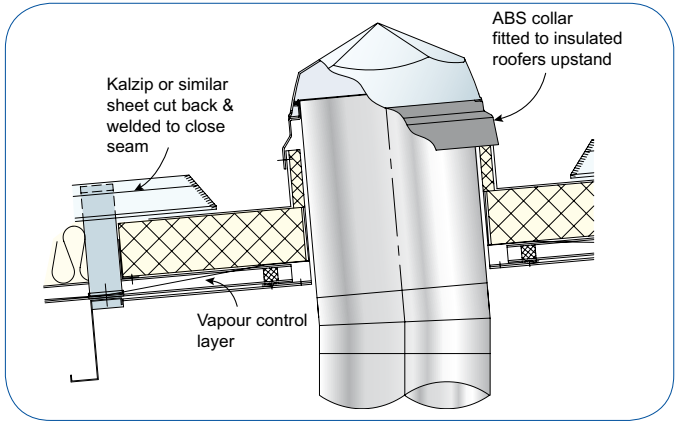





Health Centres & Homes

Recent Hospital Projects completed include:

- Aintree Hospital, Liverpool
- Basildon Hospital
- Benenden Hospital, Kent
- Chase Farm Hospital, Enfield
- Cossham Hospital, Bristol
- Fareham Community Hospital, Hants
- Forth Valley Hospital, Stirlingshire
- Hillingdon Hospital, Uxbridge
- John Butterwick Hospital, Stockton on Tees
- Kettering General Hospital
- Lanchester Road Hospital, Durham
- Langley Green Hospital, Crawley
- Little Plumstead Hospital, Norwich
- Lydney Hospital, Gloucestershire
- Moseley Hall Hospital, Birmingham
- Mount Vernon Hospital, Northwood
- New Cross Hospital, Wolverhampton
- Newton Abbot Community Hospital
- Royal Bournemouth Hospital
- Royal Hospital Chelsea, London
- Royal South Hants Hospital, Southampton
- St Ebba's Hospital, Epsom
- St George's Hospital, Stafford
- St Michael's Hospital, Braintree
- St Pancras Hospital, London
- St Peter's Hospital, Chertsey
- Tremadoc Hospital, Gwynedd
- Warwick Hospital
- Westhaven Hospital, Weymouth
- Whiston Hospital, Merseyside
- Wrexham Maelor Hospital



Brain Injury Rehabilitation Centre







SUNPIPE flashing detail, where a Code 4 lead flashing is used for bold tiled roofs

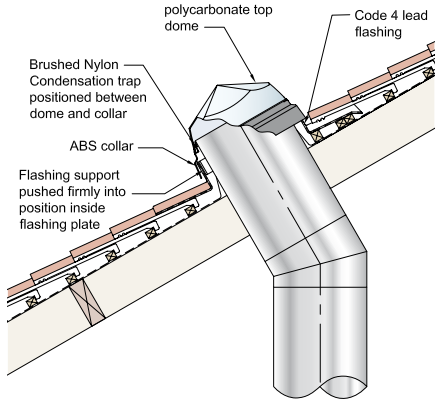

For a Plain tile roof a standard ABS universal flashing is used with a weathering skirt, but for a Bold tile roof a Code 4 lead flashing is dressed over the tiles, the ABS undercloak roofing felt support plate is used and the collar fits to the top of the lead flashing.



Technical Matters

Research and Development

Monodraught have a very active Research and Development Department at Halifax House in High Wycombe, that is working closely with several Universities in the UK. A group of four full-time dedicated R&D Engineers are exploring every avenue of renewable energy features. Over 50 SUNPIPE® natural daylight systems and WINDCATCHER® natural ventilation systems are installed at Halifax House which are constantly being monitored for performance.

Nottingham University
Monodraught have a permanent Environmental Test Chamber there to carry out the continuous assessment and development of SUNPIPE natural daylight systems and all their associated components.



A 3-year Research Programme has been undertaken. A Monodraught SUNCATCHER® natural daylight and ventilation system and SUNPIPE natural daylight system is also installed at the Eco House at Nottingham University, which was completed five years ago, and is also being constantly monitored.

Napier University
A 2-year Study was carried out to develop a computerised prediction model, as shown below, to assess the transmittance of daylight into the interior of buildings. Further advice on light output is always available from Monodraught Head Office.

Reading University
A 3-year Research Programme is being undertaken to study and assess the potential of solar powered air conditioning, to be used in conjunction with the ABS SUNCATCHER system and to establish the viability of an energy free cooling system.

Liverpool University, Loughborough University and UMIST have all

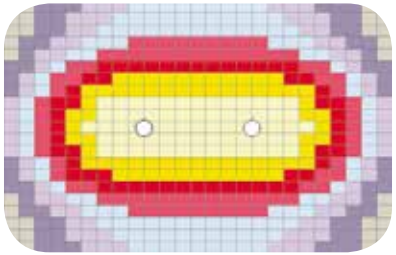

SUNPIPE Sizes and Maximum Light Output

on a typical flat roof application measured approximately 1.5m below SUNPIPE diffuser

Diameter (mm)	Full Summer Sun 75klux	Overcast Summer 50klux	Overcast Winter 25klux	Area Lit (to a normal daylight level)
	Lux Value	Lux Value	Lux Value	
230	337	225	112	7.5 sq.m (approx 80sq.ft)
300	607	404	202	14 sq.m (approx 150sq.ft)
450	1452	968	484	22 sq.m (approx 230sq.ft)
530	2052	1386	684	30 sq.m (approx 430sq.ft)
750	4238	2825	1413	50 sq.m (approx 530sq.ft)
1000	7675	5117	2558	60 sq.m (approx 650sq.ft)



Natures World, Middlesborough where a 1500mm dia SUNPIPE system is installed



been closely involved with research into Monodraught products and various papers have been published.

Detailed research has also been carried out into SUNPIPE natural daylight systems at the Belgian Building Research Institute and at Calgary University in Canada.

Range of Systems

The six most popular sizes are shown and are all available ex-stock.
In addition to the standard range, 1.5 m diameter Sunpipe system can be produced to special order. All domes are produced in UV protected polycarbonate but are also available in impact resistant acrylic.

...and the Weather?

The most remarkable feature of SUNPIPE is the amount of intensified light it can deliver. The light will vary depending on the time of year but can be expressed as an equivalent to electric lighting, as shown in these diagrams.

Tables from research conducted by the University of Nottingham

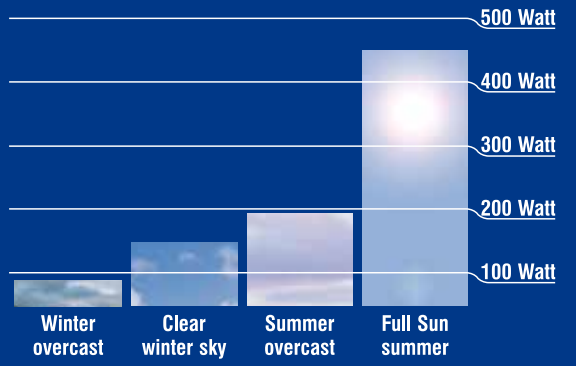

Above chart shows output of a 300mm dia. SUNPIPE to a flat roof application

Table of Weights

SUNPIPE Kit	230mm (9″)	300mm (12″)	450mm (18″)	530mm (21″)
Standard Flat Roof Kit	2.72Kg	3.86Kg	7.12Kg	7.55Kg
Standard Pitched Roof Kit (Slate)	3.22Kg	5.44Kg	7.77Kg	10.08Kg
Standard Pitched Roof Kit (Tiled)	6.07Kg	9.44Kg	13.11Kg	15.33Kg
Optional Extra Components				
Standard 610mm (2') length	0.58Kg	0.82Kg	1.21Kg	1.39Kg
30° Adjustable Elbow	0.13Kg	0.25Kg	0.48Kg	0.62Kg
45° Adjustable Elbow	0.21Kg	0.44Kg	0.82Kg	1.15Kg
Bell End Pipe (300mm)	0.28Kg	0.37Kg	0.59Kg	0.68Kg
Weathering Skirt	3.5Kg	3.91Kg	4.25Kg	5.24Kg

For information relating to the weight of other systems please contact Monodraught's Head Office

U-value

The U-value of SUNPIPE natural daylight systems has been assessed by Nottingham University at 2.18W/m^2K based on a typical application of a 1.5m length of SUNPIPE. This compared favourably with a double glazed rooflight. However, the actual area of a SUNPIPE compared to a typical rooflight is only a small percentage and so, the contribution to heat loss from the building or heat gain is insignificant. The performance of lightpipes has also been assessed by Liverpool University as part of a European Study of lightpipe performance, TC3-38. The introduction of the double glazed ceiling diffusers has further enhanced the U-value of SUNPIPE, lowering the figure to 1.66W/m^2K, again for a typical application of 1.5m length of SUNPIPE. Further information and detailed Reports on U-value performance and of the work carried out by Nottingham University in this connection is available as a Report.

Insulation

Where required the SUNPIPE system can be lagged in the roof space by simply wrapping with 25mm insulation. However, with the relatively small area of the SUNPIPE system, in comparison to the room as a whole, heat loss from such a small area is considered as insignificant.

Acoustic Performance

Multilayer Soundguard™ laminated glass supplied by Glazeguard Ltd can be incorporated into SUNPIPE ceramic ceiling diffusers, (see page 19), and provides a performance of RW 37 dB (Rtra 33 dB).

For details of fire protection systems for the SUNPIPE please see page 19.

Lengths & Bends

On smaller sizes a total maximum pipe length of 8m is recommended, but on larger sizes, longer lengths can be used.

There is a 12% reduction of light output for each 45° bend used and there is a 6% reduction in light transmission for every metre of SUNPIPE. 30° & 45° adjustable elbows can be used with all SUNPIPE applications to direct daylight to where it is required. Continual research and improvements to performance are carried out on an ongoing basis by Nottingham University, so with research and development the above figures may improve.

CE Marking

SUNPIPE SYSTEM is classified within the following EU Directive: Construction Products Directive 89/106/EEC and further conforms with the following EU Harmonized Standard: EN 1873:2995

Material Specification

Top Dome
- 4mm UV stabilised polycarbonate.
  Density: 1.20g/cm^3 to ISO 1183 & to BS476 Class 0
  Izod Impact strength: 30KJ/m^2 to ISO 180/1A.
- or 4mm impact resistant modified Acrylic.
  Density: 1.18g/cm^3 to ISO 1183.
  Izod Impact strength: 1.6KJ/m^2 to ISO 180/1A.

Condensation Trap
- Brushed nylon gasket applied to top of SUNPIPE.

Fixings
- Stainless steel self tapping fixing screws with neoprene washers or tamper-proof pin hex stainless steel fixing screws.

Roof Flashings
- 3mm ABS universal 1 piece flashing for pitched roofs.
- Galvanised flashing plate for roofs.
- Code 4 lead flashing and soaker for bold tiled roofs. ABS collar to top of galvanised or lead flashing.
- Purpose made site welded aluminium flashing for Kalzip type roofs and similar plus ABS collar.

Internal Pipe
- 0.5mm thickness high purity silver impregnated aluminium SUNPIPE with mirror finish and PVD coating 98% reflectance.

Internal Elbows
- 3-section fully adjustable elbow to 45°
- 2-section fully adjustable elbow to 30°

Ceiling Diffusers
- 3 part diffuser with black ABS permanent fixing ring.
- 2.5mm diffuser.
- 2mm white push-on removable ceiling trim.
- 3mm plywood backing plate fits above plasterboard.
- 250mm long bell end slip length into fixing ring.

Light Kits
- 50 watt 12v Dichroic extra low voltage light kit with dimmable electronic transformer, all low temperature

NBS Specification
- Full NBS specification is available for download on our website: www.monodraught.com

Offices

Most popular sizes

300mm (12" diameter) for small separate offices up to 14sq.m.

450mm (18″ diameter) for open plan offices with a ceiling height grid of 4m.

530mm (21″) diameter to suit a ceiling grid of 5 to 6m.

Advantages & Benefits

- Natural lighting from SUNPIPE® natural daylight systems is known to have a beneficial health effect for office staff as compared to fluorescent lighting.
- No reflection on VDU screens.
- Energy saving helps combat the Climate Change Levy.
- Minimal heat loss or solar gain as compared to conventional rooflights.





SUNPIPE Headquarters Office, Halifax House, High Wycombe





Extensive work has been carried out in the USA by Lisa Heschong of the Heschong Mahone's Consulting Group, where it has been found that productivity in offices served by natural daylight shows a 20% increase in output from office employees, with a marked reduction in absence because of sickness. The Heschong research also shows considerable improvement in sales in retail premises and improved performance by school children.

It is considered that SUNPIPE natural daylight systems have a marked effect on the reduction of the incidence of Sick Building Syndrome (SBS) and provides a stress-free, soothing, and far more healthy office ambience by eliminating the glare and conflict of electric lighting and computer screens.



Daimler-Chrysler Offices

Industrial and Leisure

Most popular sizes

450mm (18″ diameter), as recommended for most office areas, where ceilings are typically 4m above floor level.

530mm (21″ diameter), ideally suited to large areas with ceiling heights of up to 5m above floor level.

750mm (30″ diameter), for larger areas such as sports halls and retail stores.

1000mm diameter (40" diameter), for warehousing and similar or where a particular focal point is desirable.

Advantages & Benefits

Perhaps the most compelling reason for using SUNPIPE natural daylight systems, is to counter the effects of carbon emissions, since the SUNPIPE natural daylight systems can be used to provide natural daylighting from dawn until dusk, thereby significantly affecting the dependence on fossil fuelled electric lighting, which normally accounts for significant usage of electric power throughout daylight hours.



750mm Diamond Dome



Sutton Indoor Arena





Frosts Showroom, Hove



Asda Eco-store, Bootle



1000mm Diamond Dome



Sainsbury's, Durham - 1000mm diameter SUNPIPE natural daylight systems were used to light the double height sales area

Daylight on Demand

There are times when SUNPIPE® natural daylight system users may wish to shut out the light into the room, for instance in a Hospital Ward or a Nursing Home, a Conference Room, a School class-room or even a private bedroom.

Motorised Damper System

This system features a butterfly light shut off damper assembly controlled by a 230V motorised actuator. This enables the user to decide when to prevent daylight from entering the room. This is particularly useful for rooms with high ceilings such as Conference Halls, Lecture Theatres, etc, where remote operation is required.

The light shut off damper is also utilised on occasions where SUNPIPE natural daylight systems are installed in Retail stores where electrical lighting is used during hours of darkness. The damper prevents light from escaping the building which is particularly relevant in certain areas where planning requirements dictate the prevention of light pollution.

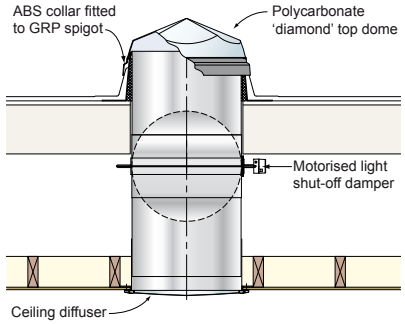

Motorised Light Shut Off Damper Assembly

Ceiling Diffusers

The new Monodraught SUNPIPE Ceiling Diffuser assembly is designed for easy installation and cleaning. It also provides an effective seal for the SUNPIPE, preventing the ingress of dust from ceiling level.

The new diffuser creates an even spread of light across any designated area. Diffusers are available in clear stippled finish for maximum light output or opal finish for a softer, but reduced level of light.

Ceiling trims are provided in white ABS as standard but satin finish stainless steel, brass and chrome effect finishes are available to enhance a variety of décors.



Patent No. 0206398.0



Double Glazed MicroPrism Ceiling Diffuser (Photograph)

Integral Electric Light Kit

Where a single source light is required, such as the top of a staircase, landing etc, the SUNPIPE can be supplied with a 50 watt extra low voltage Halogen light fitting and transformer that has been specially designed so as not
to affect the natural light output during daytime use.
This arrangement provides 430 Lux at desk level.



Fire Protection and Acoustic Performance

Two alternatives

1. SUNPIPE® natural daylight systems Fire Guard Fire Resistant Ceiling Diffusers

Monodraught have developed a ceramic based ceiling diffuser for use in conjunction with the complete SUNPIPE range, to provide up to 1-hour fire resistance.

Consisting of a tough, multi-layered glass/ceramic laminated construction which, in sheet form, can provide up to 4-hour fire resistance. The Fire Guard has an acoustic interlayer to provide a sound and fire resistant solution.

The glazed assembly is set into a galvanised steel or stainless steel frame with an intumescent seal.

Acoustic plus

This arrangement of multi-layer laminated construction also provides a wide choice of acoustic performance profiles up to 37dBa, using SoundGuard™ systems by Glazeguard Limited.

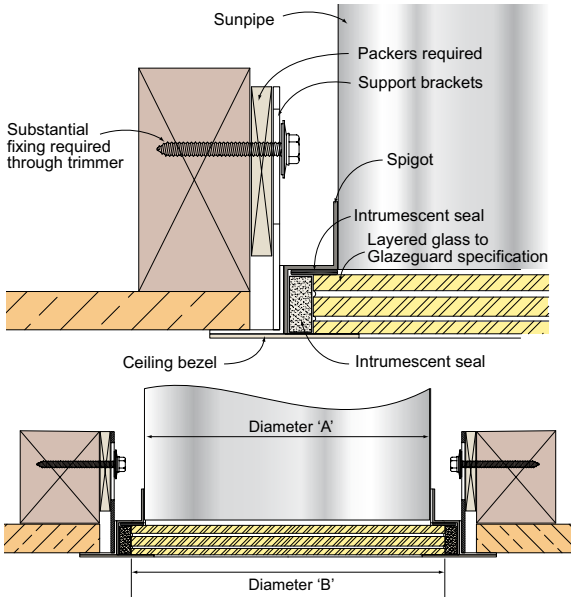

SUNPIPE Size	SUNPIPE Diameter (A)	FireGuardDiffuser Diameter (B)
230mm (9")	230mm	296mm
300mm (12")	305mm	365mm
450mm (18")	457mm	517mm
530mm (21")	533mm	593mm



- The system has been recently tested at Chiltern International Fire Ltd assessed under BS476: Part 20: 1987.
- In terms of physical safety, SUNPIPE Fire Guard has been successfully impact tested (BS6206) from both sides.
- The laminated glass will also provide excellent sound resistance to the following performance: 9mm total thickness RW37dB (Rtra 33dB).

Typical Product Performance for 9mm total thickness

Total Thickness	Impact (BS6026)	Rm. (dB)	Rw. (dB)	Rtra (dB)	Weight (kg/m²)	Light Transmission (%)	U Value (W/m²k)
9mm	Class B	34	37	33	21	85	5.30

Notes: Rm. = Mean Sound Reduction Index. Rw. = Mean Sound Reduction Index Weighted with correction ear response. Rtra. = Mean Sound Reduction Index Weighted for road traffic noise.

2. Intrumescent'Fire Choke'Fire Collars

Fitted above a plaster board ceiling and thereby leaving the SUNPIPE ceiling diffusers unaffected. The intumescent 'Fire Choke' collars are designed to prevent the spread of smoke and fire through a roof-space by crushing the SUNPIPE, when the aluminium is subjected to fire giving up to 2 hours protection.

Each 'Fire Choke' collar contains 'Intumex', an intumescent graphite compound and Alpha Firescreen 1032-2-SP, a woven fibreglass fabric coated with specially formulated micronised aluminium polymer.

Manufactured in 0.9mm mild steel, the fire choke collar is supplied in two halves, which clamp around the SUNPIPE aluminium tube.

- Fully tested to current British and or European Standards. (Test report TE 39902).
- Up to 2 hours fire resistance, specially adapted for Monodraught SUNPIPE natural daylight systems.
- Available in a range of sizes up to 530mm diameter.
- Requires no maintenance and is suitable for all interior applications.

SUNPIPE with intumescent 'Fire Choke' collar under normal conditions

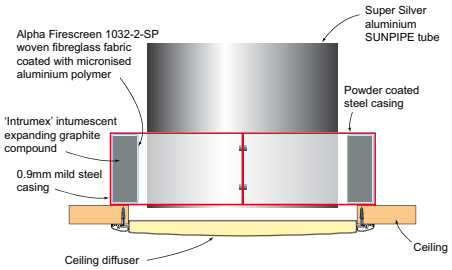

SUNPIPE with intrumescent 'Fire Choke' collar in fire situation

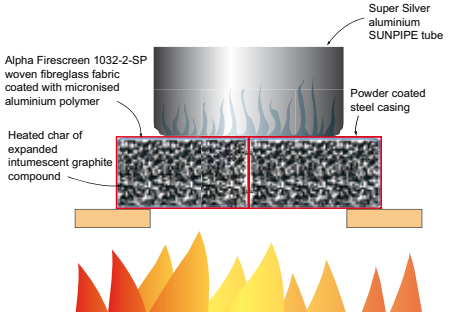

The 'Fire Choke' patented system contains an expanding intumescent material which crushes the aluminium SUNPIPE when the temperature in the room exceeds 150°C.

The Alpha Firescreen 1032-2-SP fabric is secured inside each section of the fire collar, laying between the wall of the aluminium SUNPIPE, and the 'Intumex' graphite compound within the fire collar casing. Once the intumescent material expands as a reaction to the increasing temperature, it becomes encased within two pillows of woven fibreglass fabric as it virtually blows up the fabric like a balloon, spreading outwards from both sections to cover the inside of the steel casing of the 'Fire Choke' collar. This produces a drumskin effect across the collar opening, which contains the heated char from the exfoliated intumescent material, therefore sealing off the penetration against fire, smoke and hot gases.

Overseas



World Wide demand

The popularity of SUNPIPE® natural daylight systems has now extended worldwide, recent projects include:

- GSK, Pakistan
- Dubai Falcon Centre
- Autoliv Factory, Romania
- Toyota Showroom, Turkey
- Masdar Project, Abu Dhabi
- Intermache Central Warehouse, Portugal
- Zero Energy House, Samsung, South Korea
- Malabar Aged Residential Care Facility, Australia

SUNPIPE systems are now sold worldwide, full details can be obtained at www.monodraught.com

Due to the worldwide uncertainty of the future of energy costs and the likely increase in energy prices over the coming years, considerable interest has been focused on the advantages the SUNPIPE system, namely:

- Minimal solar gain through the SUNPIPE system.
- Elimination of the need for electric lighting during daylight hours to SUNPIPE lit areas.
- Reduction in the cooling load will be achieved by the elimination of heat gain generated from electric lighting.
- Where SUNPIPE natural daylight systems are used instead of skylights, a further considerable reduction in solar gain is achieved.
- Virtually self-cleaning in most countries throughout the world due to its unique shape and, therefore, only occasional external cleaning is required.
- High level of security provided as compared to rooflights or skylights and additional security bars can also be incorporated into the construction.

SUNPIPE natural daylight systems have been a considerable success in the UK but the immediate reaction when used in most countries around the world is the remarkable amount of light produced by a SUNPIPE. This has made them particularly popular for such areas as Underground Car Parks, as well as Schools, Hospitals and Offices.



The British School, Abu Dhabi



Jumeriah International Offices, Dubai



Indoor Ski Slope, Dubai



Mall of the Emirates, Dubai



Masdar, Abu Dhabi



Lagoons Sales Centre, Dubai



The British School, Abu Dhabi

Secure Establishments

SUNPIPE® Natural daylight system offers the opportunity to achieve a high level of security by providing small diameter openings through the roof structure which can be heavily protected by additional stainless steel security bars. This is accomplished without detracting from the remarkable ability of the SUNPIPE to reflect sunlight and natural daylight.

SUNPIPE flashing detail to flat roof, serving Ward areas at HMP Winson Green, Birmingham

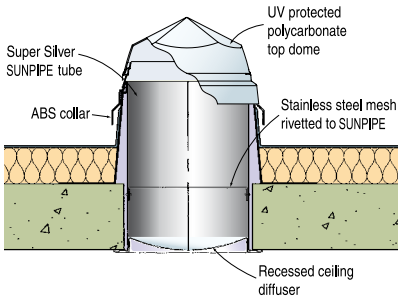

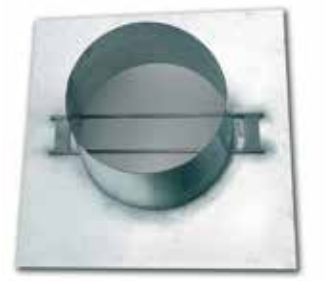

Galvanised steel upstand with security bars



Top: Battersea Park Police Headquarters, where 19 No. 530mm diameter SUNPIPE natural daylight systems were installed to internal cells, corridors and interview rooms.

Centre right & lower right: Lewisham Police Station, London, where 50 No. 330mm diameter SUNPIPE natural daylight systems were installed to the cells of this high security building. The SUNPIPE natural daylight systems were fitted with vandal resistant top domes and security bars. Stainless steel ceiling trims were fitted with security screws.

SUNPIPE flashing detail to pitched tiled roof

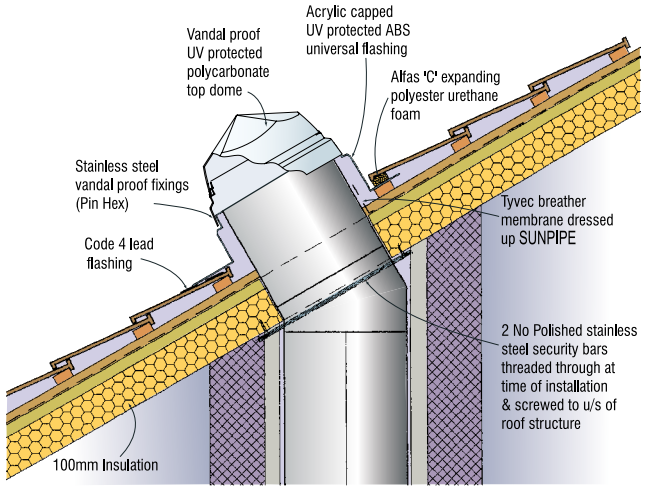







Projects completed include:

- Bury Custody Suite
- Cardigan Police Station
- Goole Police Station
- Guildford Police Station
- HMP & YOI Onley, Rugby
- HMP Bullingdon, Bicester
- HMP Bulwell Hall, Essex
- HMP Cardiff
- HMP Elmley, Isle of Sheppey
- HMP Highpoint, Newmarket
- HMP Lewes
- HMP Maidstone
- HMP Rochester
- New Police HQ, Poole
- Perth Police HQ
- Staffordshire Police HQ
- Stechford Police Station
- Thames Valley Police, Bicester
- Thetford Police Station, Norfolk
- Tredegar Police Station



The Polycarbonate diamond domes are vandal resistant. Security fixings are available to order.

Windcatcher

Natural Ventilation

Always a compliment to the Monodraught SUNPIPES are the Monodraught WINDCATCHER® natural ventilation systems.

Having eliminated the solar gain associated with conventional rooflights and skylights, the WINDCATCHER natural ventilation systems have an even more important role to play in providing the fresh air requirements, as well as providing another energy saving breakthrough by eliminating the need for air conditioning.

In the last 10 years alone, more than 5000 Monodraught WINDCATCHER natural ventilation systems have been installed.

Particular emphasis is now placed on Monodraught's SOLA-BOOST® solar assisted natural ventilation systems.

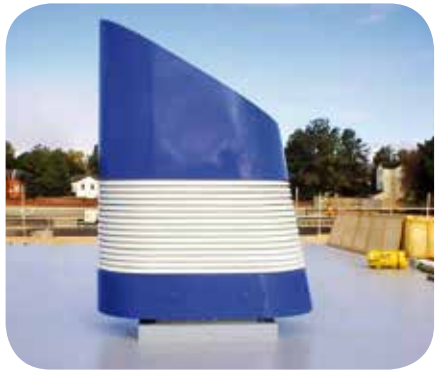

Tesco Eco-store, Cheetham Hill



Addy and Stanhope School, Deptford



Goldsmiths DMC building, London



Abercrombie School, Chesterfield



South Fields School, Surrey



Hazeley School, Milton Keynes

WINDCATCHER® X-Air next generation natural ventilation system

The Monodraught WINDCATCHER X-Air is the next generation of natural ventilation that follows in the footsteps of the successful WINDCATCHER Classic systems that have proved to be so popular.



Features:

- Computer generated aerodynamic design delivers greater ventilation rate
- ACTIVLOUVRE® system provides enhanced ventilation control and ultimate weather protection
- Integral solar powered architectural lighting system
- Composite insulated upstand allows rapid installation, low U-value and high air tightness
- Made from fully recyclable materials

SunCatcher

Natural Daylight & Natural Ventilation

Monodraught SUNCATCHER® natural daylight and ventilation systems provide a most satisfactory solution of combining natural light and natural ventilation in one composite unit.

The Monodraught SUNCATCHER system provides controlled natural ventilation as well as providing all the benefits of natural daylight. Any prevailing wind pressure carries a continuous fresh air supply through weather protected louvres on the windward side of the system at roof level. The wind movement is encapsulated by internal quadrants which turns the wind through 90° forcing air down through internal ducts into the room below. Warm, stale air is expelled from the room by the Passive Stack ventilation principle of differential temperatures and the natural buoyancy of air movement. Manual or motorised motors at the base of the system control the rate of ventilation.

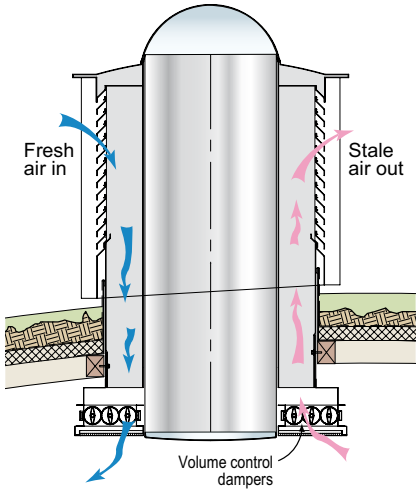

The central SUNPIPE® natural daylight system is integrated into the system and conveys natural daylight where needed.

The SUNCATCHER has the unique advantage that with air intakes on all four sides, it does not matter which way the wind is blowing since one side of the system will always act as the air intake, whilst the opposite side, being in the low pressure zone, related to the system, becomes a natural extract to the room. When the wind changes direction, so the intake and extract will also change their function maintaining a balanced condition but providing energy free air conditioning.











Above: Wycombe Wanderers Football Club

Top left: Audley Junior School

Top right: The Key Centre, University of Hertfordshire.

Centre right: Jane Lane Special School, Walsall.

Lower right: The Priory Neighbourhood Centre, Hastings.

Night-Time Cooling

One of the major advantages of the SUNCATCHER and WINDCATCHER are that during the summer period the dampers are automatically opened at midnight, when linked to our Monodraught iNVent control system, to allow the night-time cool air to descend to floor level, not only purging the building of stale air but also cooling down the interior, mass and structure of the building.

Winter Operation

To minimise ventilation heatloss, control is essential to ensure that the ventilation rate is continuously matched to meet occupant loading and to prevent excessive air change rates during unoccupied periods. Such control can most efficiently be achieved by ensuring that the building structure is airtight and by monitoring and maintaining carbon dioxide concentration in the 1000 ppm to 1500 ppm range. At night time, demand for ventilation is greatly reduced and ventilation heat loss can largely be eliminated. Natural ventilation may therefore be expected to provide reliable winter ventilation, at the full rate demanded by occupants, without resulting in excessive energy loss.

The system is controlled by manual or fully modulating dampers, linked to temperature or CO_2 sensors which in turn can be linked a fully automatic control panel, our Monodraught iNVent system.













Above: St Pauls RC School, Burgess Hill

Top centre: 26 of the 1200mm square SUNCATCHER Installed at BMW Design & Facilities Offices at Cowley, Oxford.

Top right: Detail of the base of the SUNCATCHER where the SUNPIPE features the BMW logo.

Centre right: Internal view of BMW Office

Lower right: Holy Trinity School, Weymouth.

Plan of Damper arrangement

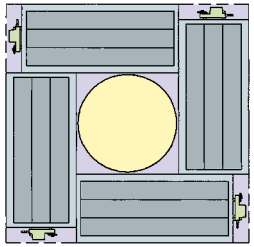

Plan from below (Amenity area)

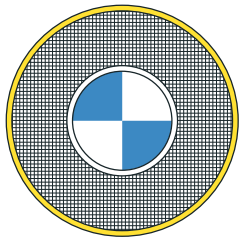

SunCatcher

Detail of one of the 1200 Square SUNCATCHER® natural daylight and ventilation systems serving the BMW Amenity area

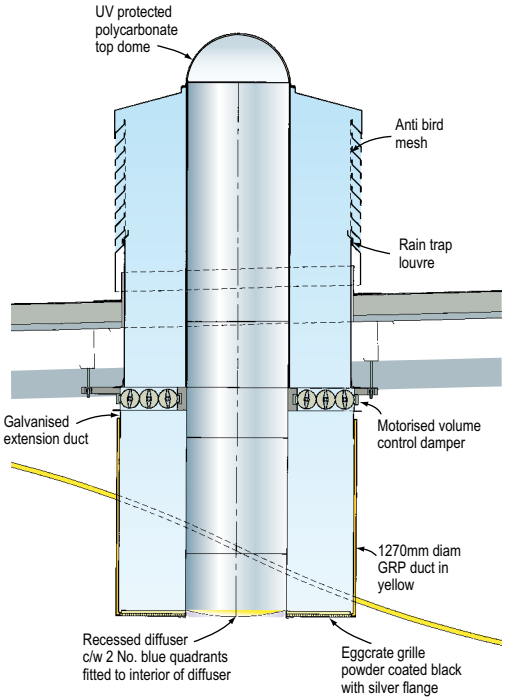

ABS SUNCATCHER® natural daylight and ventilation systems

The SUNPIPE® natural daylight system and natural ventilation in one compact, energy-free system

Designed to provide natural light and ventilation to bathrooms, kitchens, toilets, etc, this low cost ABS system is similar in operation to its larger stablemates the SUNCATCHER and WINDCATCHER® natural ventilation systems. The ABS SUNCATCHER can be used on flat roof and any pitched roof applications as the ventilation is carried through flexible ducting.

The system expels stale air from the room as a result of the passive stack ventilation principle, but also has the added advantages of bringing in a supply of fresh air on the windward side of the system.

The ceiling ventilator is fully adjustable from closed to open and is also available with a brass or chrome finish, where required.

The system encompasses all the advantages of PSV systems, which have proved popular for social housing, and meets the Building Regulation requirements. However, the ABS SUNCATCHER also brings in natural light.



Wycombe Wanderers F.C.



Thornton Road Surgery, Epsom



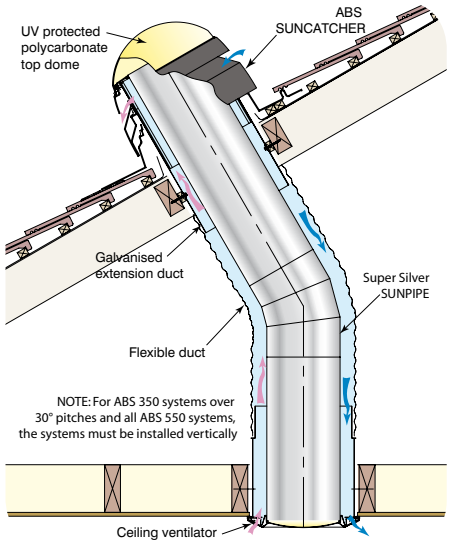



ABS WINDCATCHER



The ABS WINDCATCHER natural ventilation system is a lightweight, cost-effective unit which is ideal for providing ventilation to all small interior areas. The system normally terminates in a 600mm x 600mm eggcrate grille fitted with manual dampers.

Two ABS SUNCATCHER natural daylight and ventilation systems are available:

ABS 350: with a 230mm (9") dia SUNPIPE
- To light an area up to 7.5m^2
- Has a free area grille of 9,300mm^2
- Weight: 11kg inc. ductwork 1.5m overall

ABS 550: with a 300mm (12") dia SUNPIPE
- To light an area up to 14m^2
- Has a free area grille of 18,600mm^2
- Weight: 20kg inc. ductwork 1.5m overall

Performance

Ventilation rate at external wind speed of 4m/s
- ABS 350: 16 l/s or 0.016m^3/s
- ABS 550: 62 l/s or 0.062m^3/s











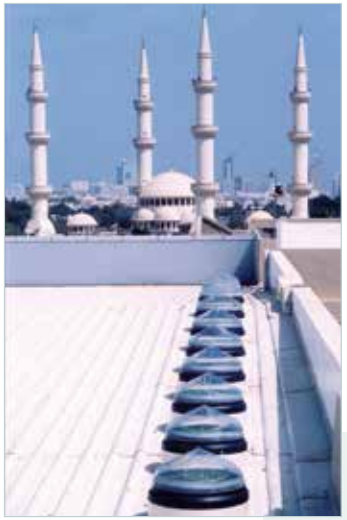

Halifax House,
Cressex Business Park,
High Wycombe,
Buckinghamshire
HP12 3SE

Tel: 01494 897700

Fax: 01494 532465

email: info@monodraught.com

www.monodraught.com

SUNPIPE, SOLA-BOOST, SUNCATCHER, WINDCATCHER and ACTIVLOUVRE are registered trademarks owned by Monodraught Limited

July 2014