egg architecture

40 Blake Road, London N11 2AE

Design and Access Statement for Householder Extension

21 HERBERT ROAD, LONDON N11 2QN

EXTENSION AND REMODELLING



Contents:

1. Overview
2. Accommodation and Layout
3. Design and Planning Principles
4. Massing and Materials
5. Landscaping
6. Access

To accompany drawings:

009-01 Existing Plans
009-02 Existing Sections
009-03 Existing Elevations
009-04 Location Plan
009-05 Block Plan
009-10 Proposed Plans
009-11 Proposed Sections
009-12 Proposed Elevations

21st January 2015

Ref: 009/02/150121

t 020 8245 7322 m 07908 736261 e ian@eggarchitecture.com w www.eggarchitecture.com

1. Overview

The existing property is a detached two-bedroomed house at the end of a terrace. It is adjacent to Shaftesbury Hall, a single-storey metal clad building, with flat-roofed rear extension, currently owned by the Samaritans which has, in the past, been used for meetings. Beyond Shaftesbury Hall lies Bowes Park rail station on the Hertford rail line. A number of the other houses in Herbert Road have had loft extensions, including the neighbour at number 19.

It is proposed to enlarge the roof space of this house, within the Permitted Development volume allowance, to add a bedroom and ensuite shower room. It is also proposed to build a small first floor extension over the existing ground floor extension and undertake some internal remodelling and amendments to windows. The proposed finished house would comprise three bedrooms and three bath/shower rooms.



Front elevation of existing property in context with neighbours

t 020 8245 7322 m 07908 736261 e ian@eggarchitecture.com w www.eggarchitecture.com



Rear elevation of existing property in context with neighbours

2. Accommodation and Layout

The existing house has two lounge rooms and a kitchen diner at ground floor, and two bedrooms and a bathroom at first floor.

The proposed works would create a second floor in the enlarged roofspace, containing a third bedroom and ensuite, The current bathroom at first floor would be enlarged by virtue of the proposed extension, and become the second bedroom. The current second bedroom would be divided into a family bathroom and an ensuite for the second bedroom. A cloakroom WC would be added downstairs.

t 020 8245 7322 m 07908 736261 e ian@eggarchitecture.com w www.eggarchitecture.com

3. Design and Planning Principles

The London Plan encourages efficient use of housing stock, allowing growing families to stay in their homes. The owner occupiers of this house wish to remain in their home, but require space for their young daughter and for her grandparents to come and stay.

The existing house is narrow, on a narrow plot, with a low roof hipped on all sides. There is no additional useable space available in the house without undertaking the proposed enlargements. Both the roof enlargements and the proposed first floor rear extension are set back and clearly subservient to the existing house. They will be constructed from high-quality contemporary materials with appropriate high-quality detailing.

4. Massing and materials

The roof enlargement would comprise a hip-to-gable conversion at the rear, with slate-tiled roof as existing, and a dormer to each side. The dormers would be finished in pre-patinated zinc, in a colour to blend with the grey of the slate tiles. The zinc would be detailed similarly to traditional lead dormers. The first floor extension would also be finished in zinc to match the dormers. The pre-patinated zinc will complement the existing stock brickwork to the rear of the house, as the photo below shows:



Example of zinc dormer detailing



Example of zinc clad extension over stock brickwork

t 020 8245 7322 m 07908 736261 e ian@eggarchitecture.com w www.eggarchitecture.com

The size of the roof enlargement is within the limits of Permitted Development, as shown:

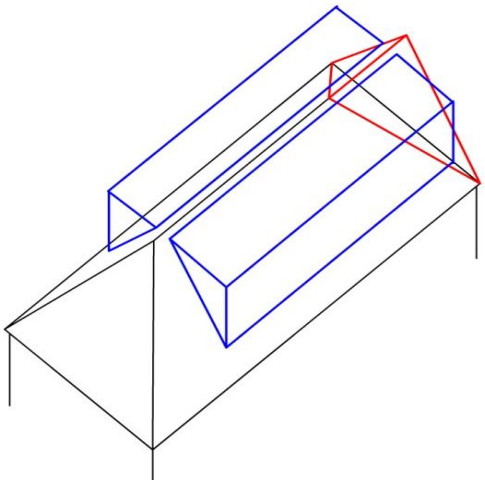

The dormers add 9m3 each of extra Roof volume, for a total of 18m3.
The hip-to-gable conversion adds 5m3.
Therefore, the **total** extra roof space is 23m3, significantly less than the 50m3 permitted for detached houses.

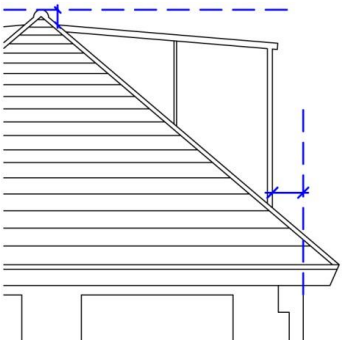

The roofs of the dormers at their highest point are below the top of the existing roof. The outer faces of the dormers are set back 200mm from the outer face of the original wall at the eaves.

5. Landscaping

The front garden of the property is currently gravelled with a paved path that leads to the front entrance. The rear is grassed with planting and a paved patio at the rear of the house. All this will remain unchanged under these proposals.

6. Access

The proposed works have no effect on the current access to the house.

END

Ian Eggleton RIBA
egg architecture
Agent

t 020 8245 7322 m 07908 736261 e ian@eggarchitecture.com w www.eggarchitecture.com