

Existing Ground Floor Shops Fronts

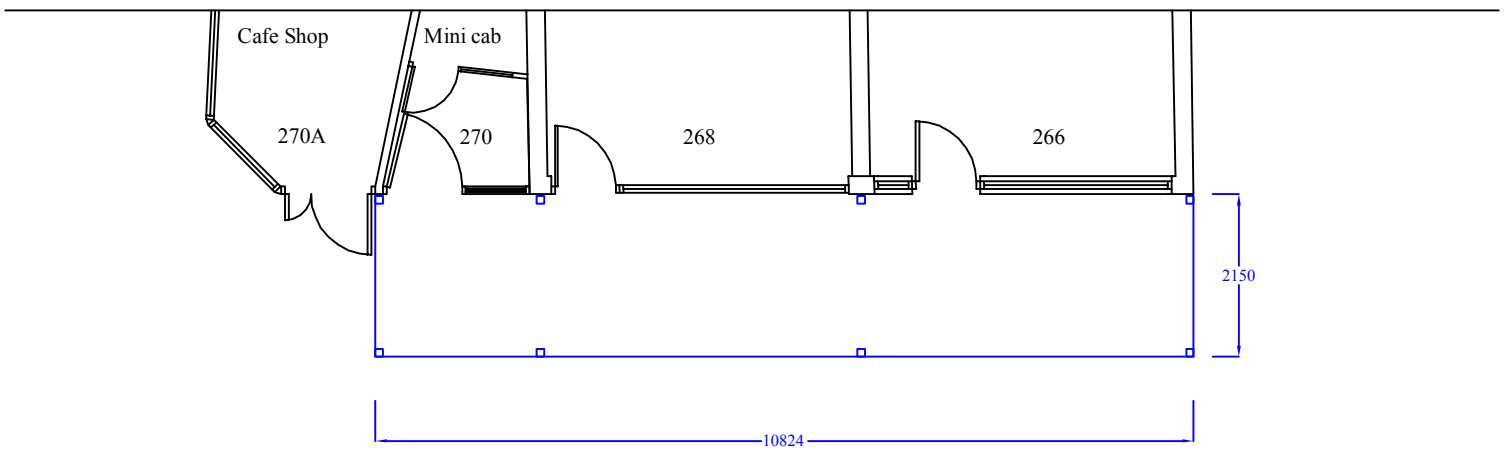

Proposed Ground Floor Shops Fronts

0 1 2 3 4 5

NABIL IBRAHIM
18 WINNS AVENUE
LONDON, E175EL
Tel:02037305778
Mobile: 07786033646
Web: nibrahim.com
Email: nabil1@me.com

Drawing Title

Ground Floor Plan

Job Title

270, 268 & 266 Langham Road
London N15 3NP

Drawing No. 126A04

Date Jan. 2015

Scale 1/100

Size A3

Revision