Broad Oak Tree Consultants Limited
Laurel House, Burwash Road, Broad Oak, Heathfield, East Sussex TN21 8SS
Tel: 01435 862444 Email: broadoaktrees@btconnect.com

ARBORICULTURAL METHOD STATEMENT FOR PERMISSIONED EXTENSIONS, REFURBISHMENT AND RECONFIGURATION

AT

10-27 CONNAUGHT HOUSE
CONNAUGHT GARDENS
LONDON
N10 3CH

By

Tim Laddiman
BSc.(Hons) M.I.C.For. M.Arbor.A.
Chartered Arboriculturist

Council: London Borough of Haringey
Application No: HGY/2014/1973
Status: Approved subject to Conditions
Conditions covered in Statement: 8 and 9

Our Ref: J47.38
20th March 2015

CONTENTS

		Page No.
1.	INTRODUCTION	
2.	GENERAL	2
3.	ARBORICULTURAL WORKS	2
4.	TREE PROTECTION MEASURES – FENCING	3
5.	TREE PROTECTION MEASURES – GROUND PROTECTION	3
6.	PILING RIG ACCESS	4
7.	EXTENSION FOUNDATIONS	4
8.	INSTALLATION OF DISABLED ACCESS RAMP	4
9.	INSTALLATION OF SERVICES/DRAINAGE	5
10.	ARBORICULTURAL SUPERVISION OF WORKS	5

APPENDICES:

1. TREE PROTECTION PLAN, DRAWING NO. J47.38/03 REV. A
2. EXAMPLES OF FENCING SPECIFICATION AND SIGNAGE
3. EXAMPLES OF CROSS SECTION OF PILING MAT AND FOUNDATION

1. INTRODUCTION

Broad Oak Tree Consultants Ltd. have received instructions through Norton Mayfield Architects LLP to provide the arboricultural information necessary to meet the requirements of Conditions 8 and 9 of the Grant of Consent of Application No: HGY/2014/1973.

The permission relates to the extension, refurbishment and reconfiguration at 10-27 Connaught House, Connaught Gardens, London, N10 3CH.

Conditions 8 and 9 read as follows:

TREE PROTECTION

8. Prior to the commencement of any development hereby approved and before any equipment, machinery or materials are brought onto the site for the purposes of the development hereby approved, details of the specification and position of the fencing and ground protection for the protection of any retained tree to comply with BS 5837: 2012 - Trees in relation to design, demolition and construction – Recommendations shall be submitted to and approved in writing by the Local Planning Authority. The works shall be carried out as approved and the protection shall be installed and inspected by the Council Arboriculturist prior to the commencement of any development hereby approved and maintained until all equipment, machinery and surplus materials have been removed from the site. Nothing shall be stored or placed in any area fenced in accordance with this condition nor shall any fires be started, no tipping, refuelling, disposal of solvents or cement mixing carried out and ground levels within those areas shall not be altered, nor shall any excavation or vehicular access be made, without the written consent of the Local Planning Authority.

Reason: In order to ensure the safety and well being of the trees on the site during construction works that are to remain after building works are completed consistent with London Plan Policy 7.21, Policy SP11 of the Haringey Local Plan 2013 and Saved Policy UD3 of the Haringey Unitary Development Plan.

TREES – FOUNDATIONS

9. Prior to the commencement of any development hereby approved and before any equipment, machinery or materials are brought onto the site for the purposes of the development hereby approved, a Tree Protection method statement incorporating details of the foundations for the extensions shall be submitted to and approved in writing by the Local Planning Authority. The statement must include a precommencement site meeting attended by all interested parties, (Site manager, Consultant Arboriculturist, Council Arboriculturist and Contractors) to confirm all the protection measures to be installed for trees to be retained. A series of site monitoring and supervision visits by the Consultant Arboriculturist must be agreed including installation of tree protection measures and foundations. The works shall be carried out as approved and the protection shall be maintained until all equipment, machinery and surplus materials have been removed from the site.

Reason: In order to safeguard the root systems of those trees on the site which are to remain after building works are completed during constructional works in the interests of visual amenity consistent with Policy 7.21 of the London Plan, Policy SP11 of the Haringey Local Plan 2013 and Saved Policy UD3 of the Haringey Unitary Development Plan 2006.

An Arboricultural Implications Assessment report, dated 30th June 2014, had been submitted as part of the Planning Application. This included details of tree inspection information, root protection areas and constraint assessment which were incorporated into the final designs.

The Tree Protection Plan (TPP), drawing no. J47.38/03 Rev. A attached in Appendix 1 incorporates this base tree information.

2. GENERAL

This Statement sets out the methodology for proposed works with the potential to affect trees. Compliance with this Arboricultural Method Statement will be a requirement of all relevant contracts associated with the development. All contractors will be responsible for undertaking their own risk assessments with regard to any of the works detailed in this Arboricultural Method Statement. The documents to be referred to in conjunction with this statement are as follows:

- BS5837:2012 "Trees in Relation to Design, Demolition and Construction - Recommendations".
- BS3998:2010 "Tree Work - Recommendations", hereinafter referred to as BS3998:2010.
- Broad Oak Tree Consultants Ltd. drawing no. J47.38/03 Rev. A "Tree Protection Plan", hereinafter referred to as the TPP (included in Appendix 1).
- NJUG Volume 4 "Guidelines for the Planning, Installation and Maintenance of Utility Apparatus in Proximity to Trees" hereinafter referred to as NJUG Volume 4.

3. ARBORICULTURAL WORKS

The following tree works have been recommended based on safety grounds, operational space requirements and permissioned development footprints. These works should be undertaken prior to installation of tree protection fencing/site hoarding to reduce risks to operatives.

No other trees/shrubs are to be removed or pruned without reference to the Arboricultural Consultant (AC).

Tree No.	Species	Works required
T1	Lime	Cut back outer crown to south back to the boundary within 2m of extension footprint.
T3	Ash	Re-reduce crown all over to previous reduction points and ensure 1.5m clearance from building face and roof.
T4	Ash	Re-reduce crown to east to previous cut points and ensure 1.5m clearance from building face and roof.
T6	Elder	Cut back crown to provide 1.5m clearance from building face.
T7	Hawthorn	Cut back crown to boundary line.
T13	Elder	Fell to ground level.
T27	Robinia	Fell on safety grounds.
G28	Ash/Sycamore	Cut back crowns to south to provide 2m clearance from building face.

The two trees listed above for removal (trees T13 and T27) are indicated as such with blue dashed crown outlines on the TPP.

All tree works to be carried out by appropriately qualified/trained and insured operatives to BS3998:2010 requirements.

Prior to tree surgery/felling works commencing, the trees for works should be checked for the presence of nesting birds or bats. Disturbance of nesting birds or bats could represent an offence and result in prosecution under the Wildlife and Countryside Act 1981.

No fires or chip piling to occur within 5m of the drip line of any tree canopy or within 15m of any tree stem, whichever is the further.

All vehicles associated with the tree works to remain on existing areas of hard standing/surfacing.

4. TREE PROTECTION MEASURES – FENCING

Protective fencing to be erected at indicated locations on the TPP once tree works are completed and prior to general clearance of the site.

Fencing to comprise scaffold uprights driven into the ground to circa 60cm depth with a maximum of 3m spacing between uprights supporting a scaffold framework. To the uprights weldmesh panels, such as “Heras” or similar products, are to be firmly attached using scaffold clips. Fencing to produce enclosed zones around individual or linear runs of trees with notices placed on every 5th panel saying “Protected Zone – Keep Out” or similar.

Examples of fencing specification and signage are included in Appendix 2.

Alternatively the fencing alignments can be achieved with tradition site hoarding to secure the site for Health and Safety reasons. Post holes for site hoarding will be hand dug or formed using a hand held motorised auger to ensure hole sizes are kept to the minimum necessary.

No access will be allowed within areas protected by fencing. The storage of potentially injurious materials such as fuels, oils, chemicals and cement will be kept at least 15m from any stem or outside protective fencing areas, whichever is the greatest distance. Alternatively, storage within a bunded storage vessel may be acceptable.

Within the fenced areas no changes in levels will be allowed, either increase or decrease. All material storage will be kept outside of fenced areas with storage zones to be determined by the Site Manager.

5. TREE PROTECTION MEASURES – GROUND PROTECTION

To allow for safe working space around buildings, it will be necessary for the set back of fencing to occur where indicated by hatching on the TPP.

The area shown hatched on the TPP is to be covered in a geotextile, over which 100mm of woodchip is to be placed, topped with minimum 12mm thickness non slip surfaced man made boards or side butting scaffold boards. Alternatively 50cm-100cm of Type 1/MOT could be used instead of woodchip provided it is retained at the edges to facilitate easy removal post construction. Ground protection to be installed and removed at the same time as protective fencing.

6. PILING RIG ACCESS

To allow access for the piling rig to the west of the building it will be necessary to form a levelled surface if it is not craned over the building. This will need to comprise load bearing/spreading inter locking steel/plastic plates specifically designed for temporary roadway construction. These will be laid over a built up sub base with no excavation of the banks permitted at any point around the footprint of the building.

The specific design of the access track and piling mat has to be designed by the appointed piling contractor and cannot be detailed in this Statement. However the constraints relating to trees will be provided to the contractor and the scheme must be approved by the AC prior to completion.

The AC will also oversee the installation of the access track and piling mat to ensure that it complies with BS5837:2012 requirements and does not result in any tree root damage.

7. EXTENSION FOUNDATIONS

Foundation for the new extensions are to be piled with ground beams set as near to existing ground levels as practical within engineering tolerances. Any localised requirement for excavation will be undertaken by hand tools only. Any roots exposed will be neatly cut back to the excavation face nearest the trees using sharp secateurs/loppers to minimise tissue exposure in line with BS5837:2012 recommendations.

For the pile locations the upper 60cm will be hand excavated to check for the presence of roots. Any roots over 50mm in diameter will be left intact and localised relocation of the pile undertaken. This approach accords with BS5837:2012 recommendations.

Installation of the piles and ground beams will be overseen by the AC to ensure minimal root disturbance occurs.

An example of the cross section of the piling mat and foundation is included in Appendix 3 for reference purposes only. It is understood that due to the access issues the minimum size piling rig possible will be utilised to save on weight and access width requirements.

8. INSTALLATION OF DISABLED ACCESS RAMP

The formation of the disabled access ramp to the south of the building is within the outer root protection areas (RPAs) of the southern boundary trees.

To minimise the level of root disturbance only the minimum excavation necessary to form the required slope and retaining walls will be undertaken.

All excavations within the RPAs will be undertaken by hand tools only with any roots encountered neatly cut back to the excavation face nearest the trees using sharp secateurs/loppers in accordance with BS5837:2012.

All excavations within the RPAs will be overseen by the AC to ensure the works minimise disturbance to the tree root systems.

9. INSTALLATION OF SERVICES/DRAINAGE

All services, foul drainage and soakaways will be located outside of calculated root protection areas as indicated on the TPP. Any requirements to excavate within the root protection areas, for whatever reasons, will be undertaken to the requirements of NJUG Volume 4.

10. ARBORICULTURAL SUPERVISION OF WORKS

A precommencement meeting will be held on site once all tree works have been completed and tree protection measures installed.

The meeting will include the AC, Site Manager and Council Tree Officer. The Site Manager will be responsible for conveying all tree related precautionary measures to the various contractors as and when they are on site, assisted by the AC.

The AC will undertake monthly inspections of the site and produce a written statement and photographs to the Council's Tree Officer confirming the condition of the site and protective measures, any reportable infringements of protection areas and details of any mitigation measures necessary. Monitoring will continue until construction and the soft landscaping have been completed.

The AC will also oversee the following works and provide written and photographic records of the works to the Council Tree Officer.

- Installation of piling rig access track and piling mats.
- Hand tool excavation of pile location upper 60cm and any ground beam excavations.
- Excavations associated with the disabled access ramp.
- Any service/drainage runs within tree RPAs.

Tim Laddiman
Chartered Arboriculturist
Broad Oak Tree Consultants Ltd.

APPENDIX 1

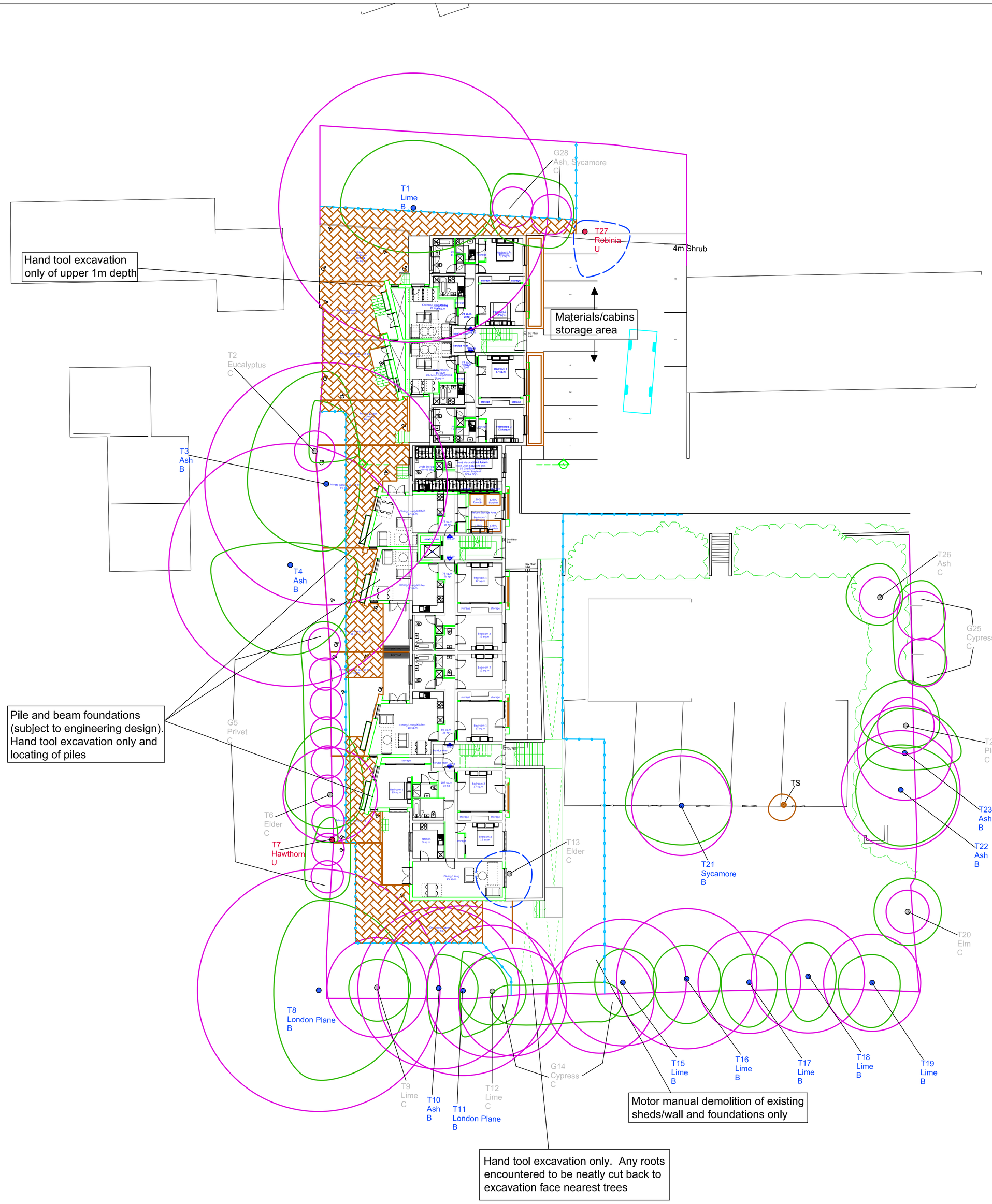

Broad Oak Tree Consultants Ltd
Laurel House
Burwash Road
Broad Oak
Heathfield
East Sussex
TN21 8SS

Tel: 01435 862444
Email: broadoaktrees@btconnect.com

CONNAUGHT HOUSE
MUSWELL HILL
LONDON

TREE PROTECTION PLAN

T1 – G28 Tree numbers

BS Category of Condition

- 0 — BS Condition A
- T1 — BS Condition B
- T2 — BS Condition C
- T6 — BS Condition U

Paced crown spread

BS Calculated root protection areas

TS — Too small for inclusion in BS5837:2012 survey

Tree to be removed for development

Protective fencing location

Ground protection

TREE PROTECTION INFORMATION

Protective fencing and ground protection measures to be installed at locations specified prior to commencement of any demolition works.

Protective fencing to comprise a scaffold framework with uprights driven into the ground to 60cm. depth at no more than 3m. spacing. Framework to be braced within high usage/construction/demolition areas. Weldmesh panels to be securely fixed to uprights to produce a continuous barrier. For security reasons, fencing can be formed of sie hoarding. Waterproof signs to be attached to every 5th panel declaring "TREE ROOT PROTECTION ZONE – KEEP OUT" or similar wording. Fencing to be constructed in accordance with fig. 2 and section 6 Specifications of BS5837:2012.

Ground protection measures to comprise a single thickness of side butting scaffold boards over a 100mm. compressibe layer laid onto a geotextile.

The fenced protection zones around retained trees, hedges and shrubbery are to be regarded as sacrosanct and none of the following are to occur within these areas:

– Storage or disposal of any soil, building materials, machinery, fuel or waste residues of any description.

– Siting of any temporary structures of any description including site office/sales buildings, temporary car parking facilities, porta-loos, storage compounds or temporary hard standing areas.

– Excavations, soil/turf stripping, raising/lowering of existing levels or alterations to the existing natural surfaces/ground conditions of any other description.

– Location of temporary drainage, water supplies or any other temporary underground services.

– No use, movement or parking of any machinery or vehicles of any description.

– Additionally, no fires shall be lit within 20m. of the trunks of any trees or the centre line of any hedgerow to be retained.

All services to be installed to the requirements of NJUG Volume 4 "Guidelines for the Planning, Installation and Maintenance of Utility Apparatus in Proximity to Trees". Any runs within retained tree root protection areas to either be bored/moled or any hand excavation to be supervised by the Arboricultural Consultant

0 1 2 3 4 5 10
Scale (m)

DRAWING NO. J47.38/03 Rev A

Scale: 1:200 at A1

Added to by: NL

19/03/2015

APPENDIX 2

BS5837:2012: FENCING SPECIFICATIONS

Figure 2 **Default specification for protective barrier**

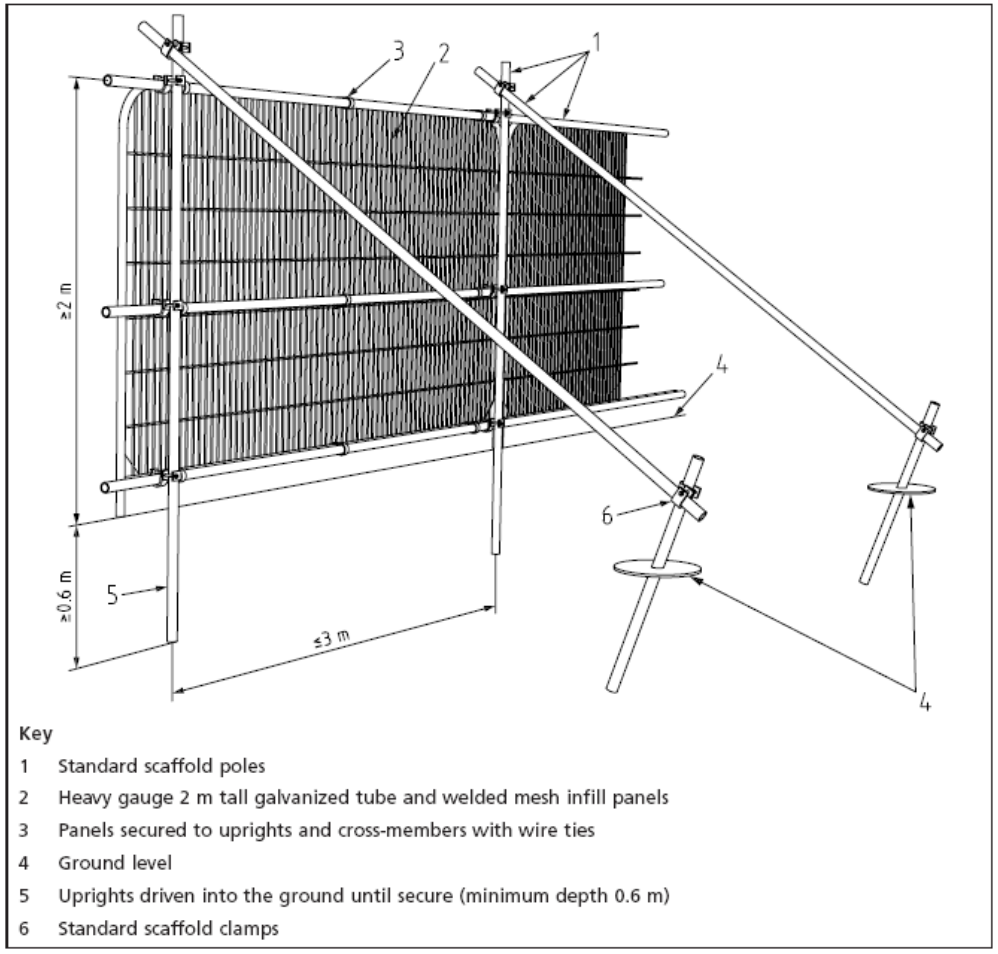

Key

1 Standard scaffold poles
2 Heavy gauge 2 m tall galvanized tube and welded mesh infill panels
3 Panels secured to uprights and cross-members with wire ties
4 Ground level
5 Uprights driven into the ground until secure (minimum depth 0.6 m)
6 Standard scaffold clamps

Figure 3 **Examples of above-ground stabilizing systems**

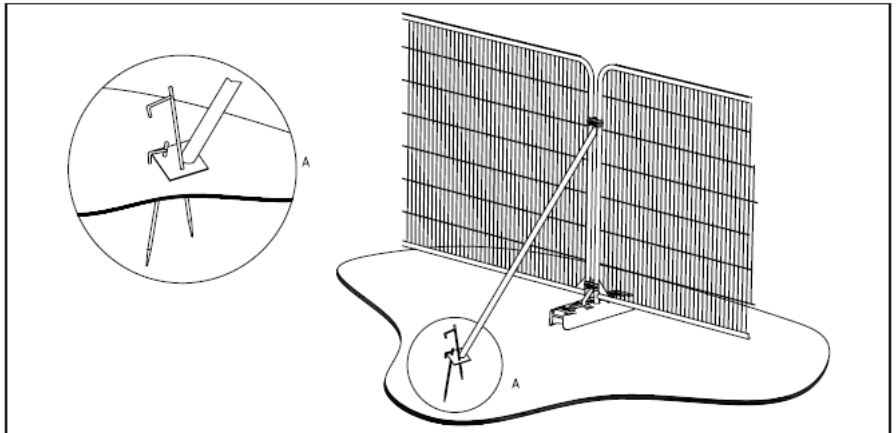

a) Stabilizer strut with base plate secured with ground pins

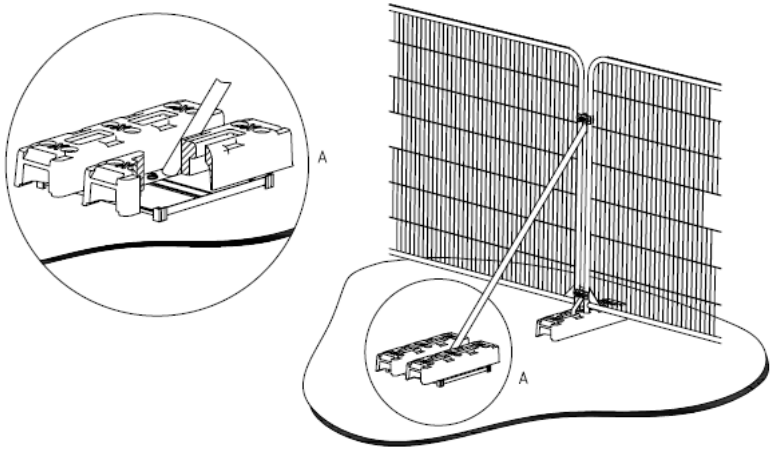

b) Stabilizer strut mounted on block tray

EXAMPLE OF FENCING SIGNAGE





APPENDIX 3

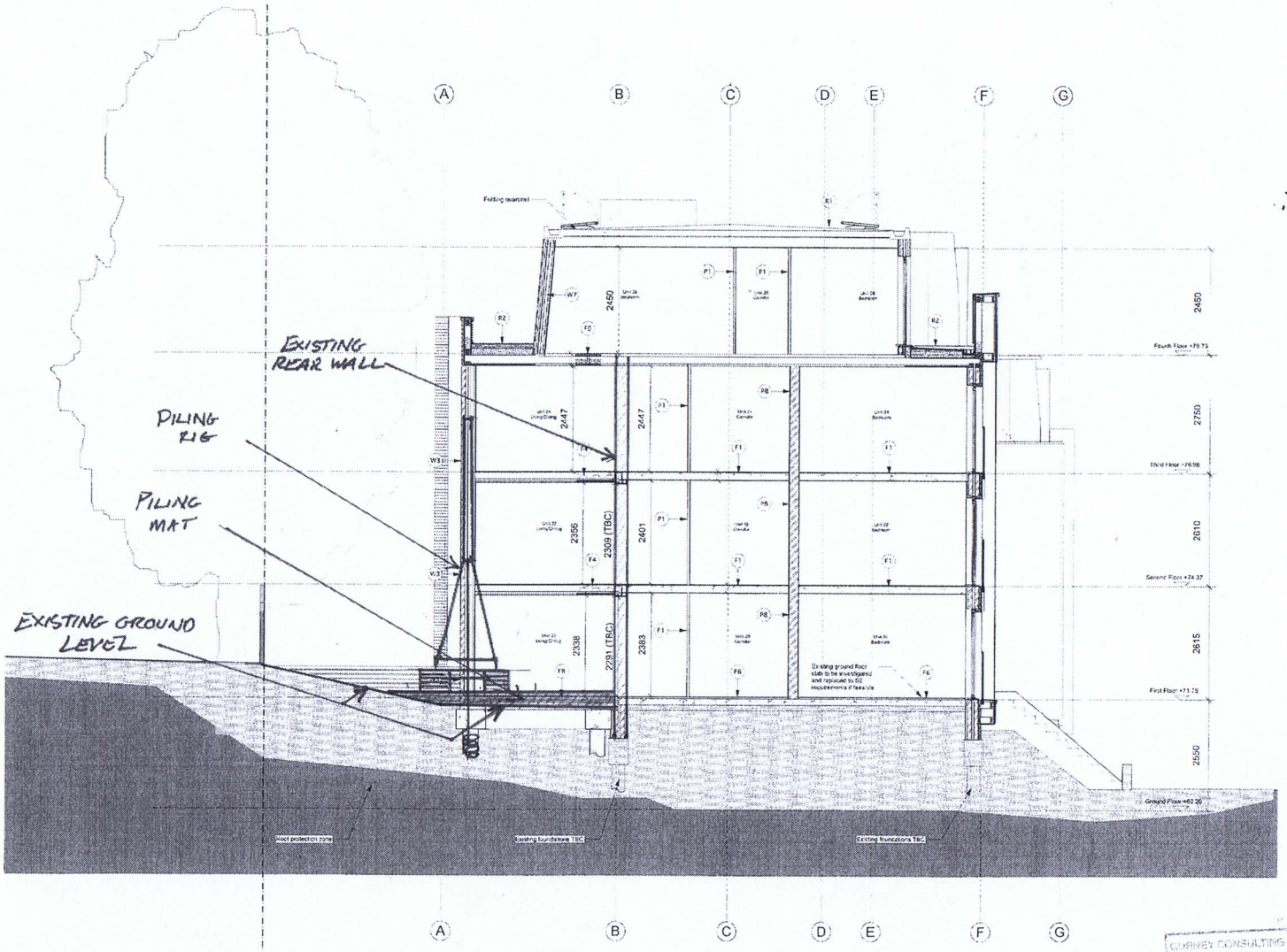

0 6 8 10 M

PILING OPERATIONS

MARCH 2015

8606/SK 16

D	31/10/14	Construction updated
C	1/10/14	Construction updated

All dimensions and areas are approximate and are to be verified on site.

NORTON MAYFIELD ARCHITECTS LLP

Spiceworks Hirland Works John Street, Sheffield S2 4QU
tel 0114 270 3014 mail@nortonmayfield.co.uk

INFORMATION

Indra Services Ltd

Connaught House, London
N10 3LH

1321-A-303D

Proposed Section C-C

1:50 @ A1
1:100 @ A3

DEC 2013

GURNEY CONSULTING ENGINEERS
JOB No. 8606
ACTION BY
31 OCT 2014
REPLY TO
DATE