PROPOSED

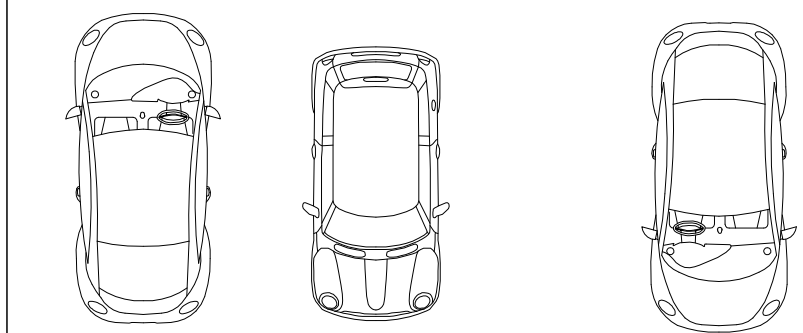

COURTYARD PARKING AREA

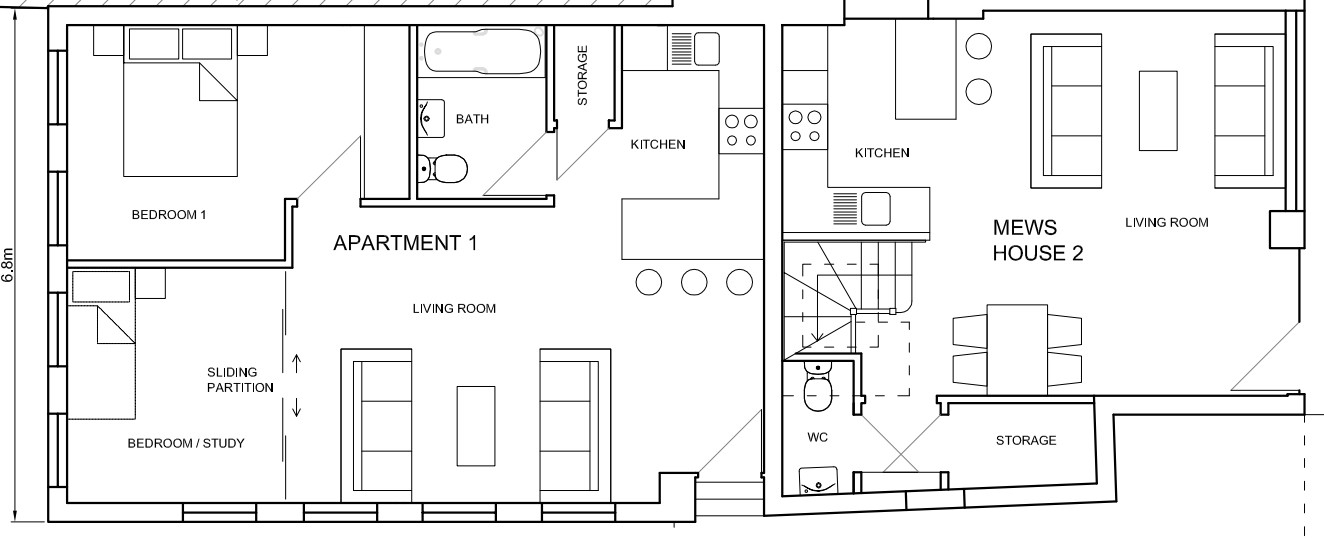

EXISTING GROUND FLOOR PLAN

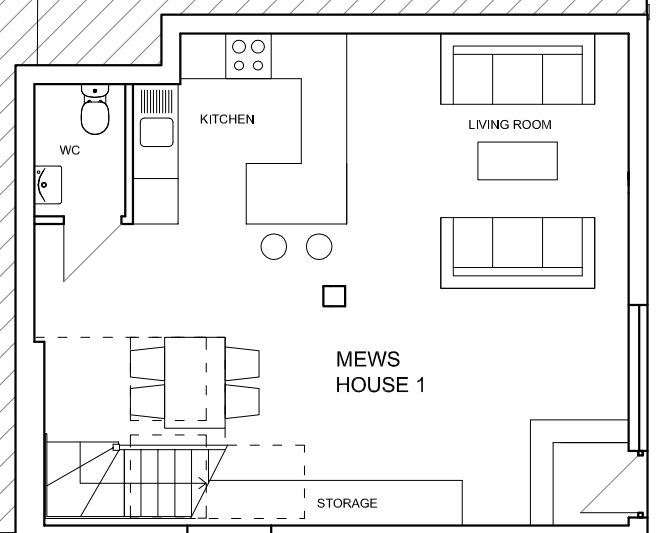

EDISON ROAD



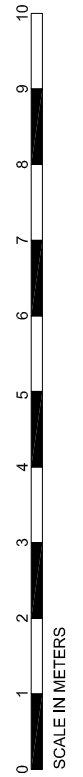

24-25 EDISON ROAD
LONDON, N8 8AE

PLANS AS EXISTING
GROUND FLOOR

DRAWING NO. 061/30

SCALE: 1:100 @ A3
DATE: 30.03.2015

STUDIO LEY
ARCHITECTURE+PLANNING