PCW
Perfect Crystal Windows Ltd.

1 Cumberland Avenue
London NW10 7RX
Tel: 02089 616 111
Fax: 02089 616 136
info@perfectcrystal.co.uk
www.perfectcrystal.co.uk

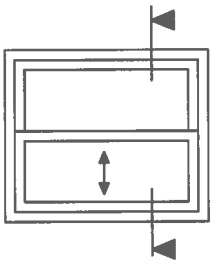

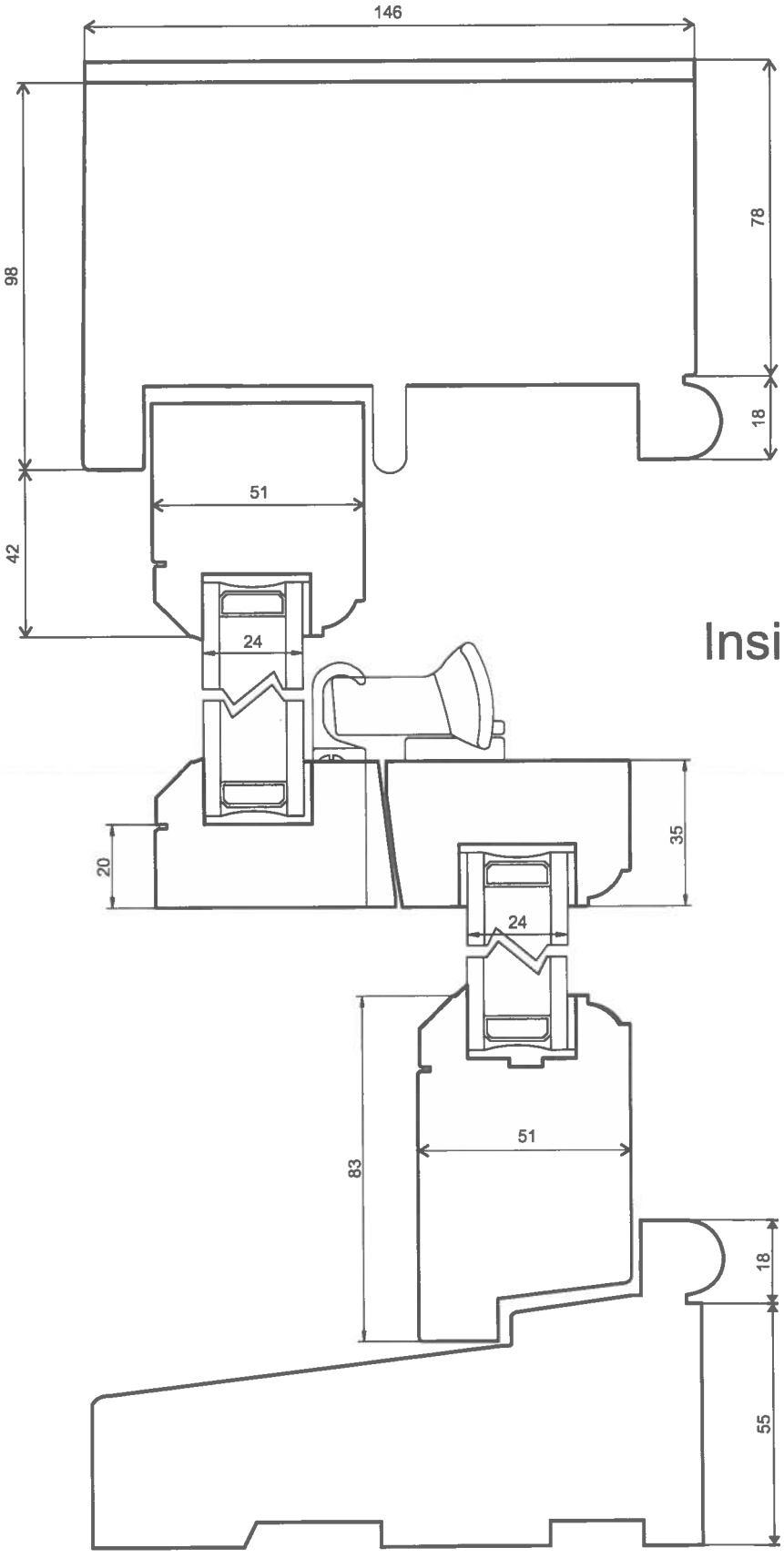

Outside

Inside

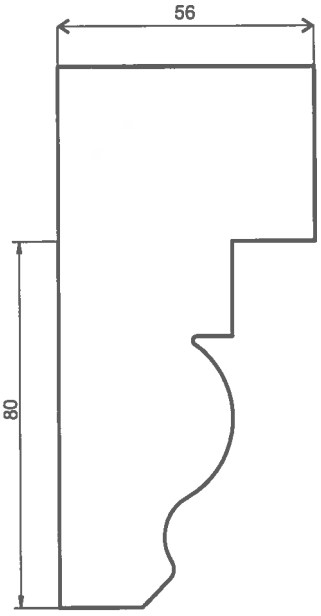

Horn

PCW
Perfect Crystal Windows Ltd.

1 Cumberland Avenue
London NW10 7RX
Tel: 02089 616 111
Fax: 02089 616 136
info@perfectcrystal.co.uk
www.perfectcrystal.co.uk

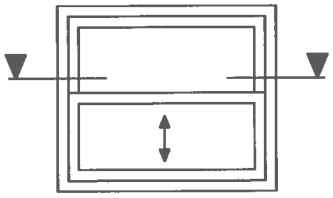

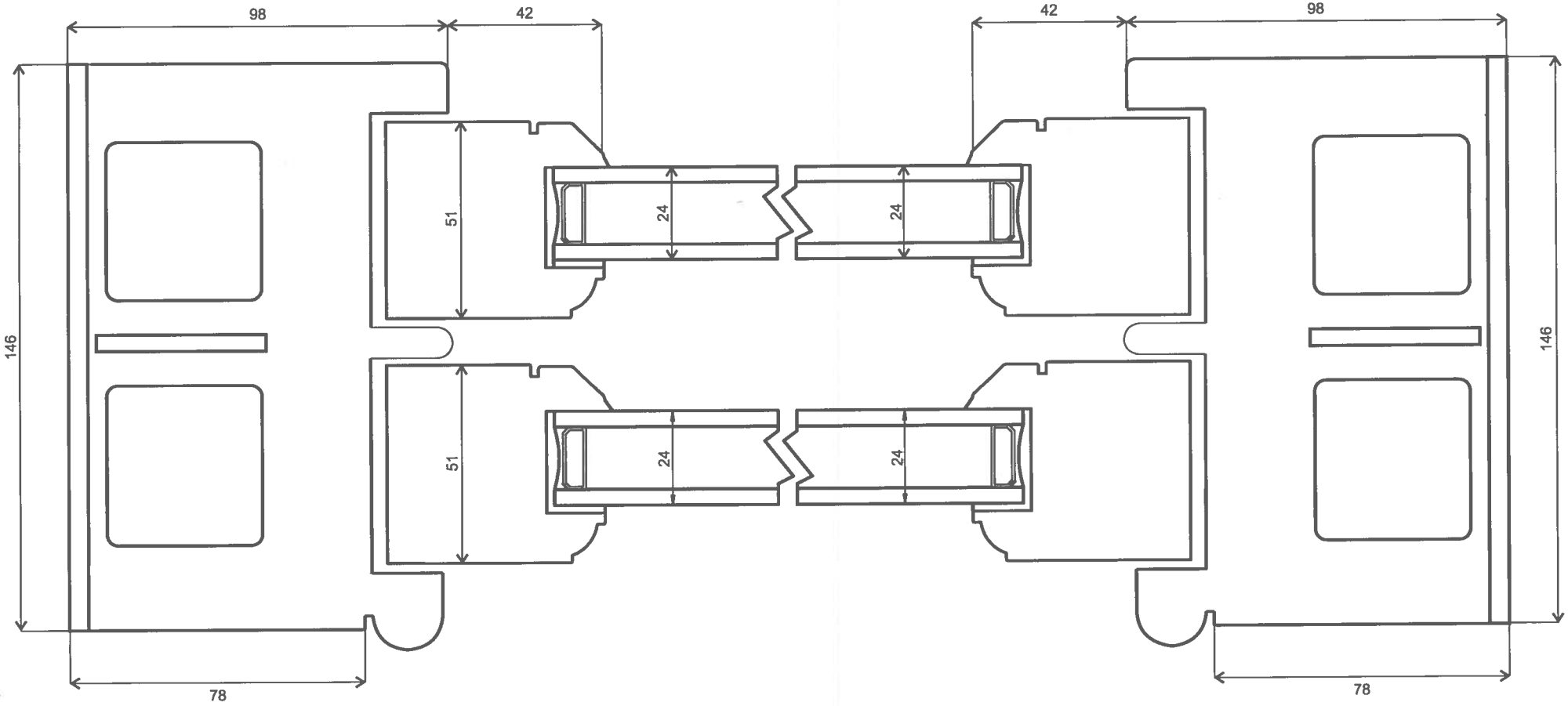

PCW
Perfect Crystal Windows Ltd.

1 Cumberland Avenue
London NW10 7RX
Tel: 02089 616 111
Fax: 02089 616 136
info@perfectcrystal.co.uk
www.perfectcrystal.co.uk

