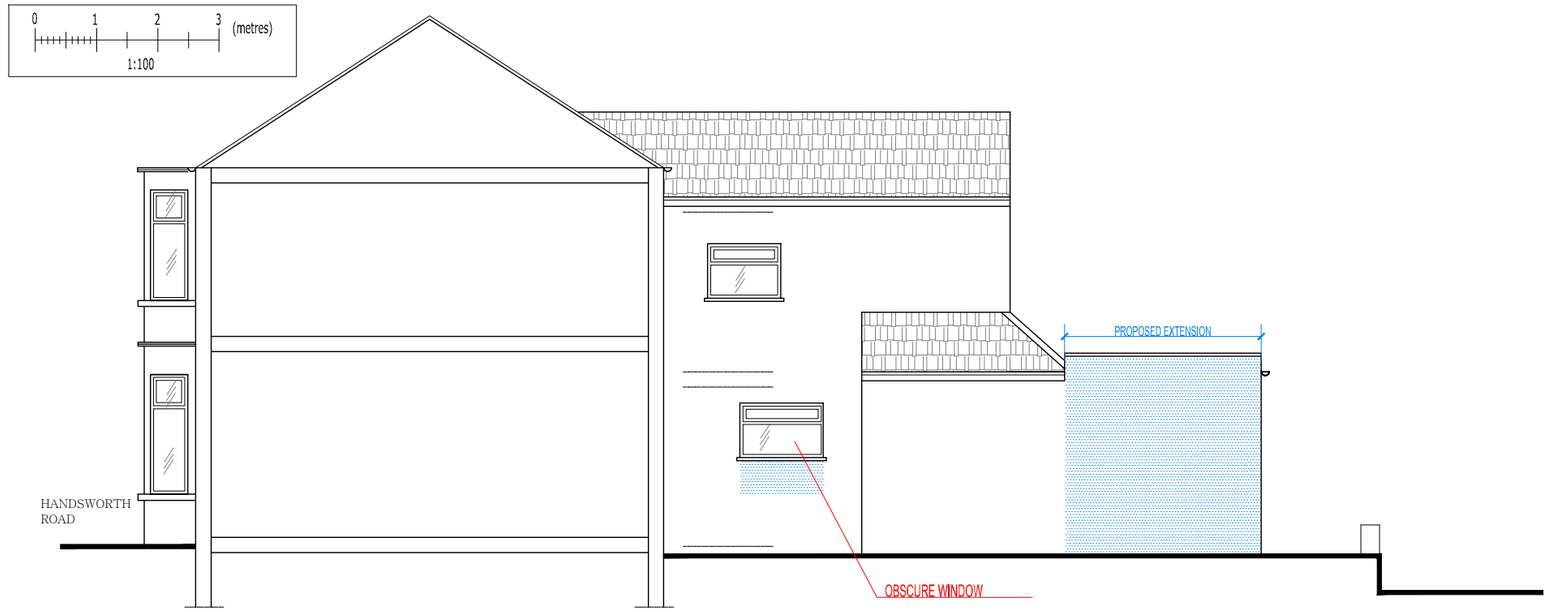

PROPOSED SECTION/SIDE ELEVATION

SCALE: 1/100

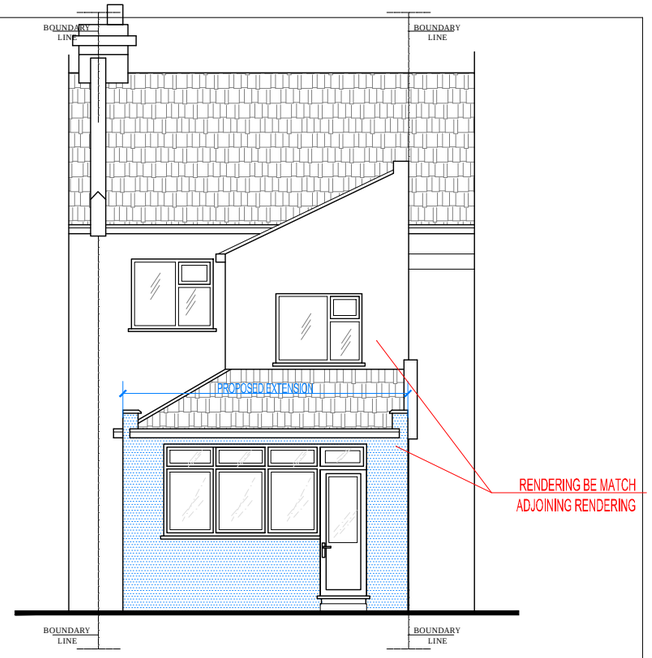

PROPOSED REAR ELEVATION

SCALE: 1/100



SITE PLAN

SCALE:1/500

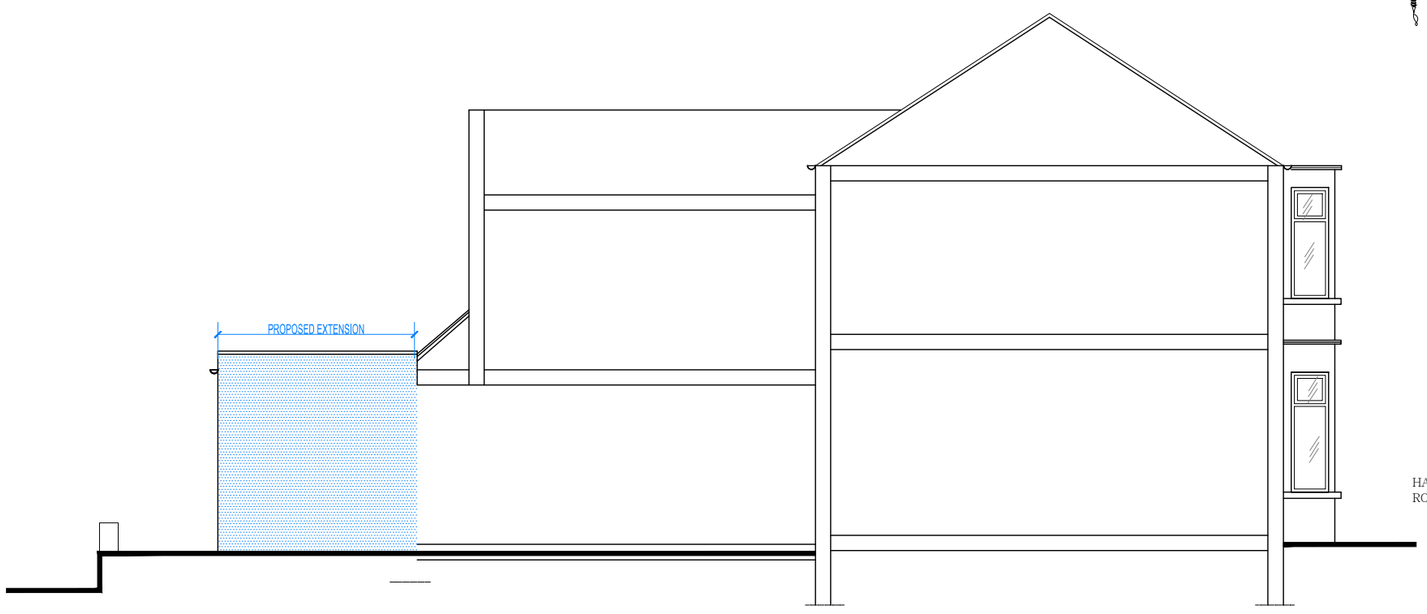

PROPOSED SECTION/SIDE ELEVATION

SCALE: 1/100

THE CONTENTS OF THIS PLAN INCLUDING THE PRINTED NOTES ARE COPYRIGHT AND REPRODUCTION IN WHOLE OR PART IS NOT PERMITTED WITHOUT PRIOR CONSENT OF SAYAR DESIGN IN WRITING

12 HANDSWORTH ROAD
LONDON N17 6DE

PROPOSED
- SIDE ELEVATIONS
EXISTING SITE PLAN

SCALE: 1/100, 1/500 @ A3	REF. NO : 027.15/04
DATE: NOV. 15	DRG BY: S. AY -SAYAR DESIGN

SAYAR DESIGN
Tel.: 078 8787 1149 / 079 0425 2588
12 HANSWORTH ROAD.
LONDON N17 6DE
www.sayar.co.uk - mimarsinan_ay@hotmail.com