1

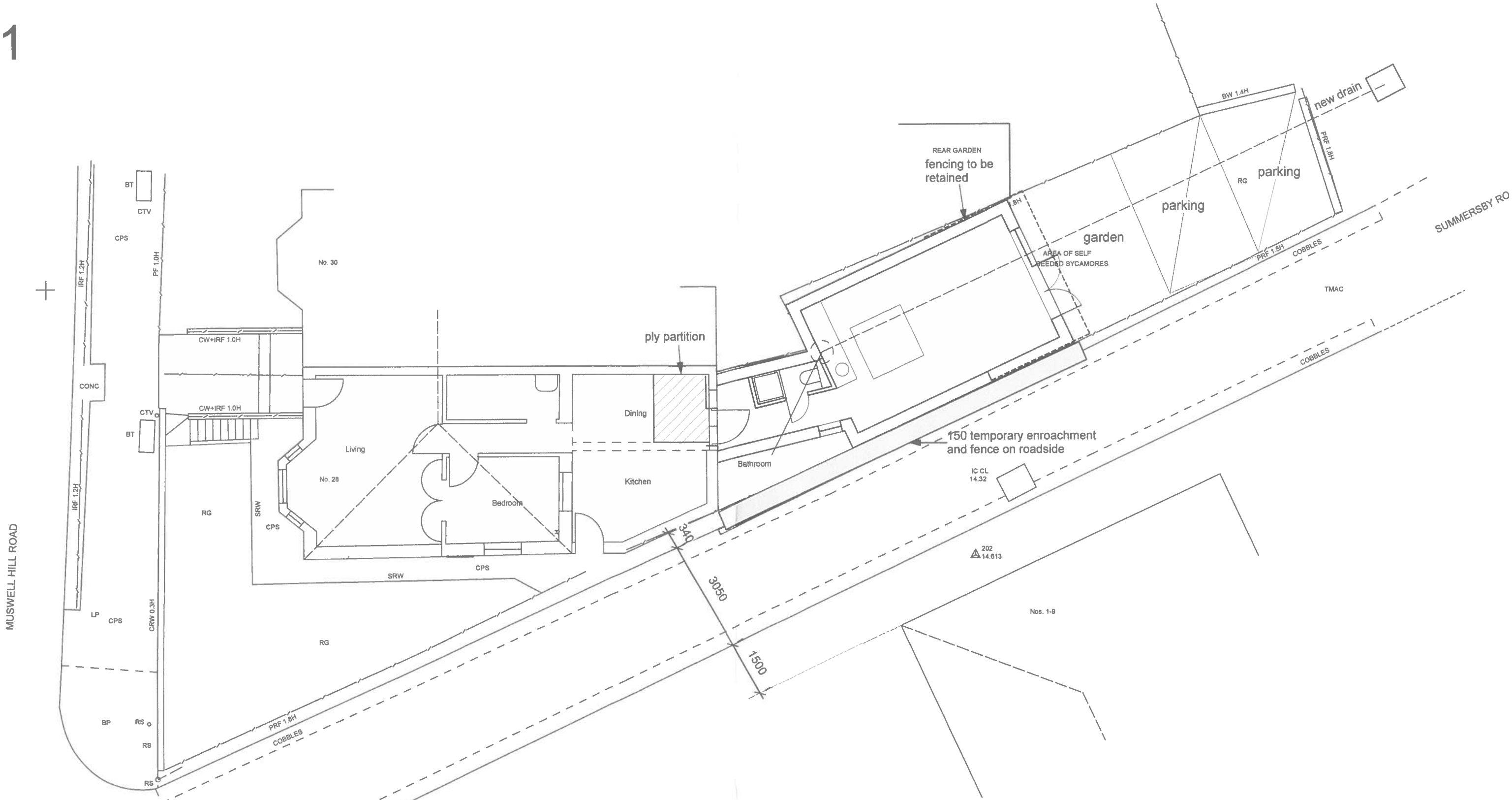

Drainage

Below ground BS EN 752
Above ground BS EN 12056 - includes rainwater pipe
Drainage to be exposed to be agreed on site, existing may be combined

0 1 2 3 4 5 6 7 8 9 10

1:100

28 Muswell Hill Road
London N10
1 Preliminaries
1:100 @ A3
22.10.2015

201

Paul Wonke Associates
Architects and Designers

20C Queens Avenue

Tel 0208 442 1385
email: wonke@btinternet.com

28 Muswell Hill Road
London N10
Plan, Section and Elevation
Scheme A
1:50 @ A3
22.10.15

Paul Wonke Associates
Architects and Designers

20C Queens Avenue

Tel 0208 442 1385
email: wonke@btinternet.com

0 1 2 3 4 5

1:50

17.55

height of existing fence

450

16.25

15.90

existing

2400

15.15

existing planning consent

from OSM

Bathroom

2450

6700

1370

6000

edroom

Kitchen

1710

w.c.

rooflight

3630

LIVING ROOM

window

rendered blockwork

3

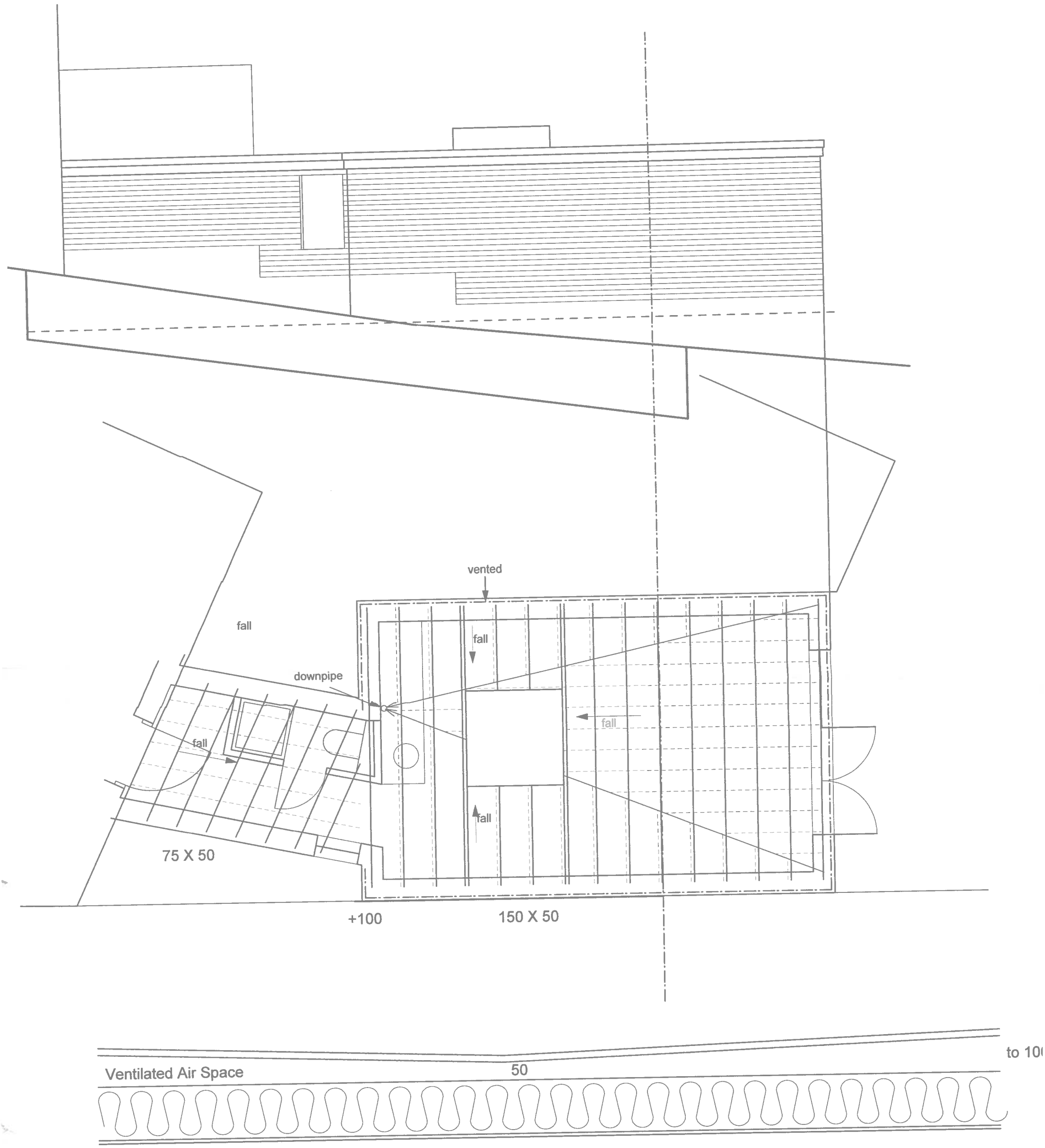

1:10 SECTION

0 1 2 3 4 5

1:50

28 Muswell Hill Road
London N10
Roof and Elevation
1:50 @ A4
22.10.15

Paul Wonke Associates
Architects and Designers

20C Queens Avenue

Tel 0208 442 1385
email: wonke@btinternet.com

Paul Wonke Associates
Architects and Designers

20C Queens Avenue

Tel 0208 442 1385
email: wonke@btinternet.com

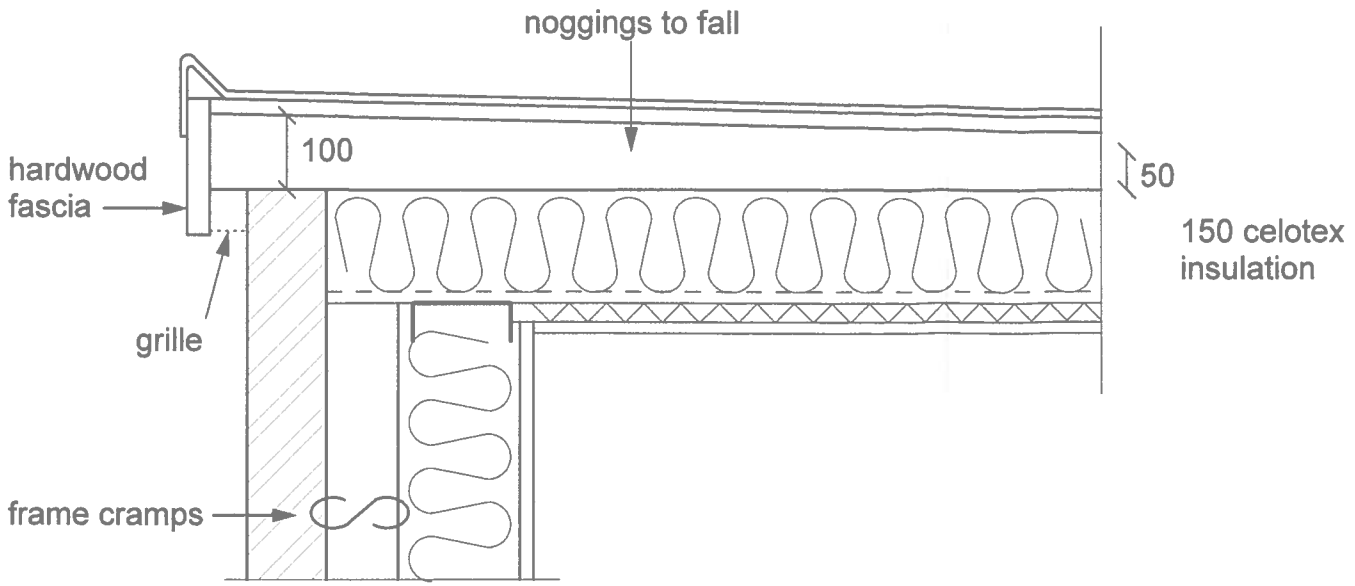

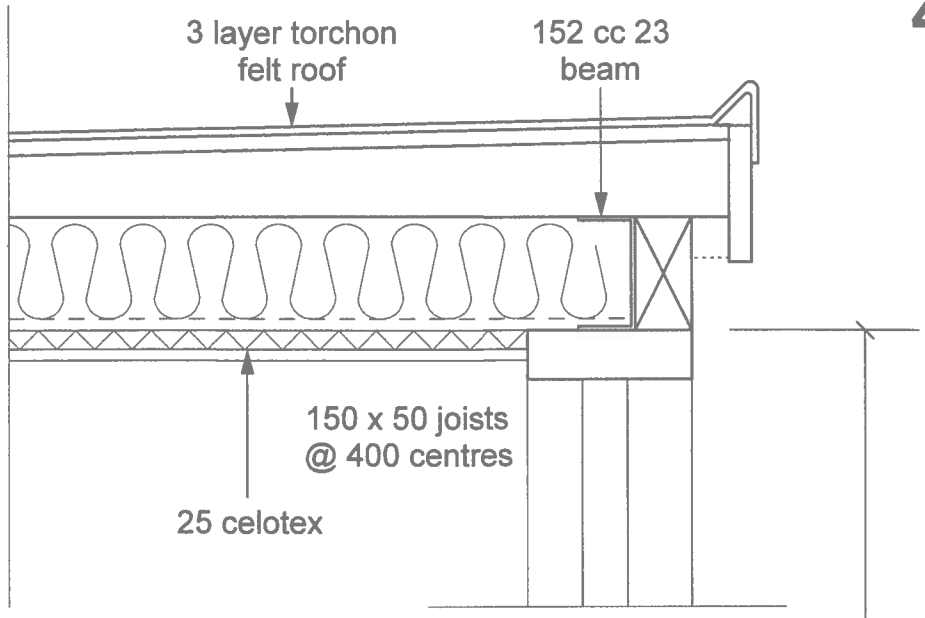

. Smoke detector BS 5839 + BS 5446
interlinked + mains wired
. All wiring and electrical workto be designed, installed,inspected and tested to BS7671, the IEE 17th edition Wiring Guidance and Building Regulation Part P (electrical safety)
. Competent person to submit certificate on completion of works
. mech for 15 l/s extractor with 15 min overrun to windowless / non habitable rooms
. trickle vent 8000 mm sq.

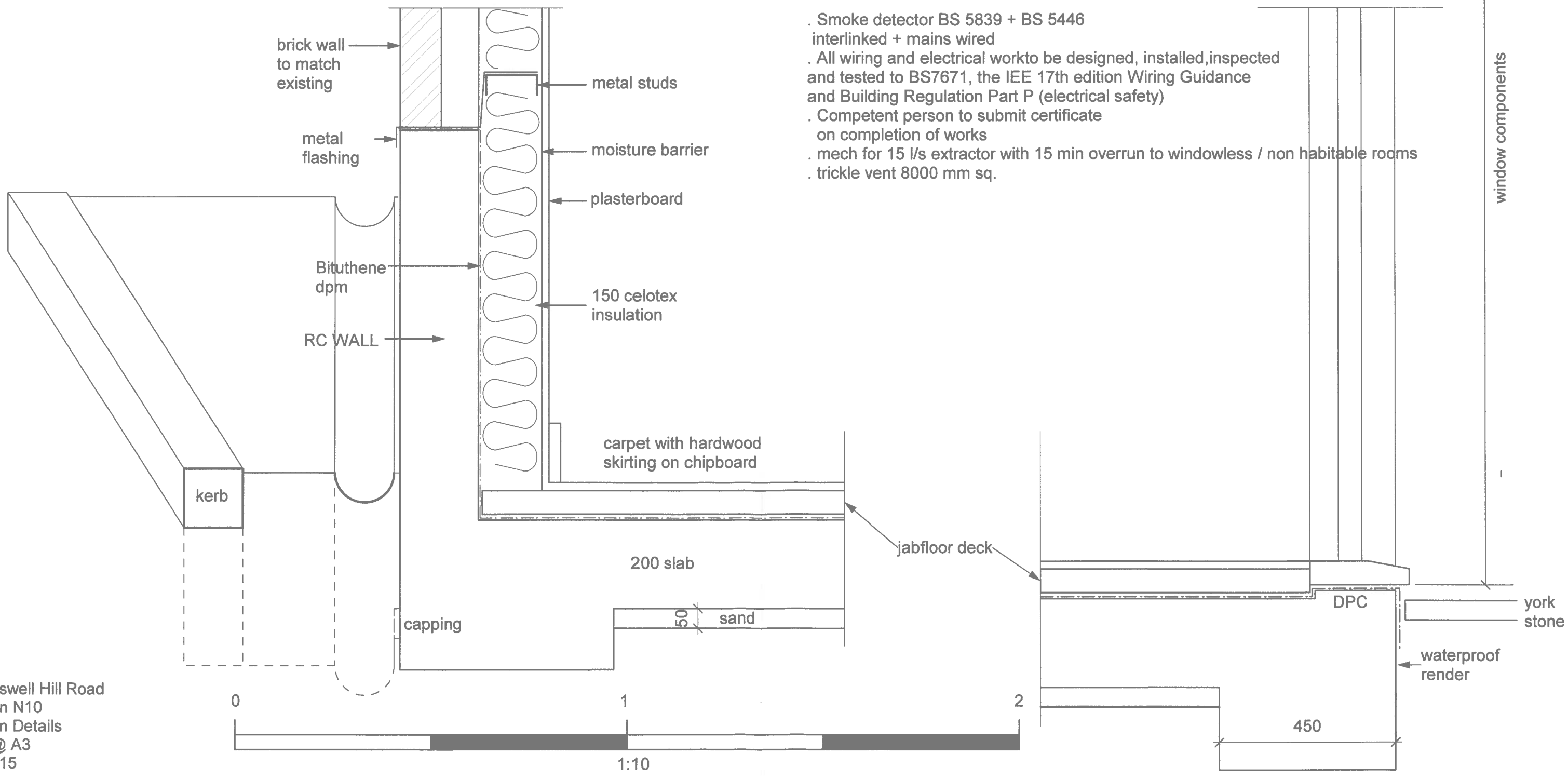

28 Muswell Hill Road
London N10
Section Details
1:10 @ A3
22.10.15