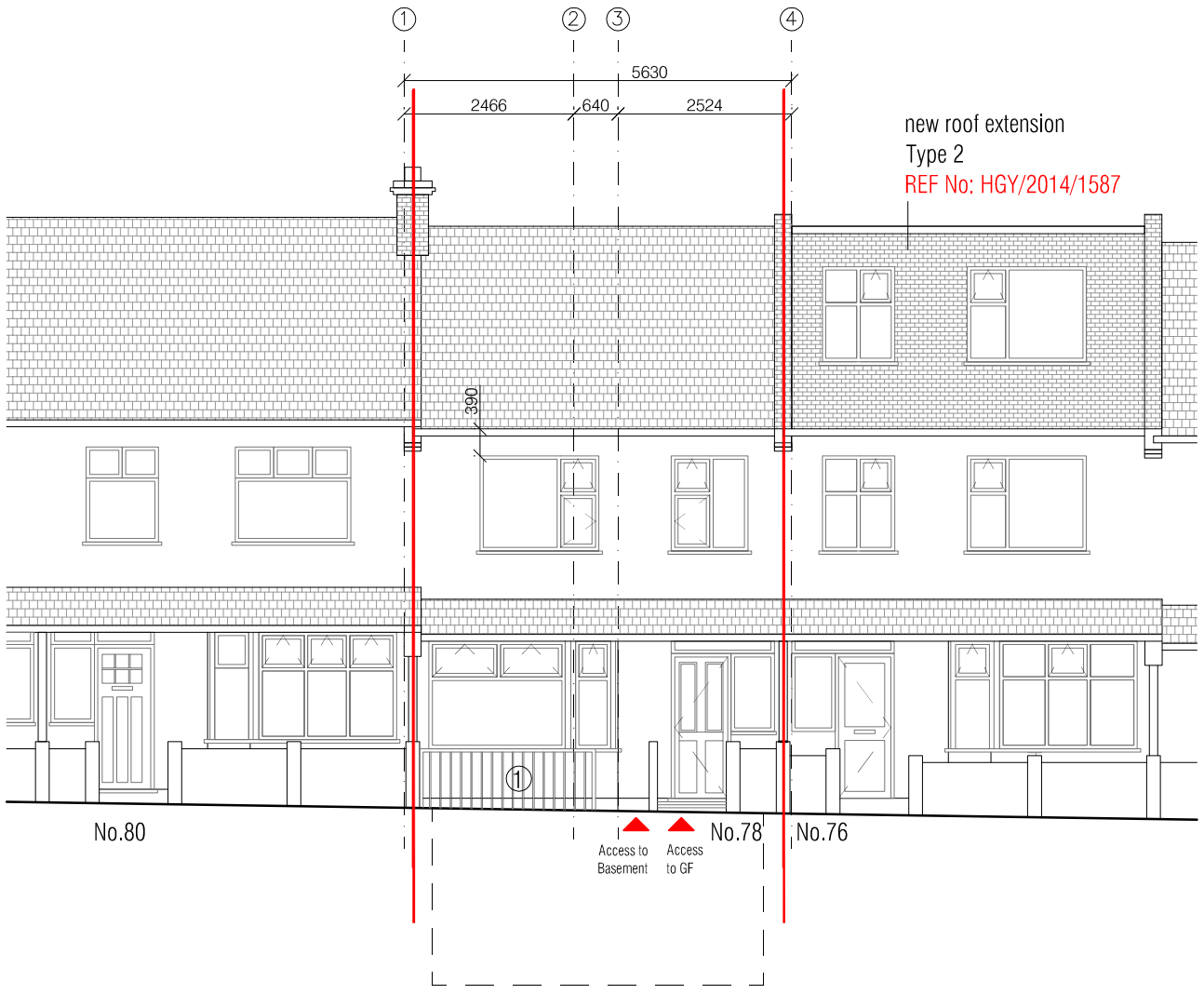

FRONT ELEVATION AS PROPOSED

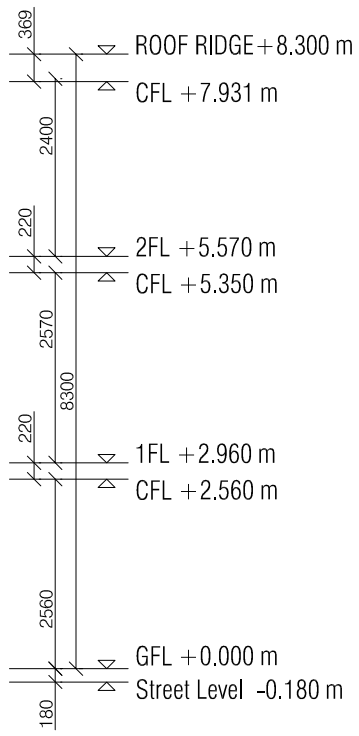

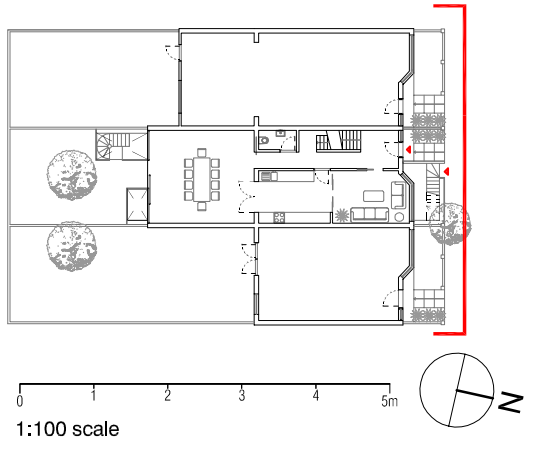

1:100 scale

MATERIAL KEY

1) New black painted metal railing at 1.1m high

site boundary

revisions:	notes:							
	© copyright Studio Verve Architects Ltd Do not scale off this drawing. All dimensions in millimeters unless otherwise shown. Levels are approximate. All dimensions to be verified on site prior to construction.	studio verve architects	Enver House 2-4 Tottenham Rd London N1 4BZ +44 (0)20 7254 2852 info@studioverve.co.uk www.studioverve.co.uk	78 CROWLAND ROAD,LONDON,N15 6UU FRONT ELEVATION AS PROPOSED	proj no: 217	status: P	drwg no: 9-10	revision: -
					scale: 1:100 @ A3		issue date: 06.11.15	rev date: -