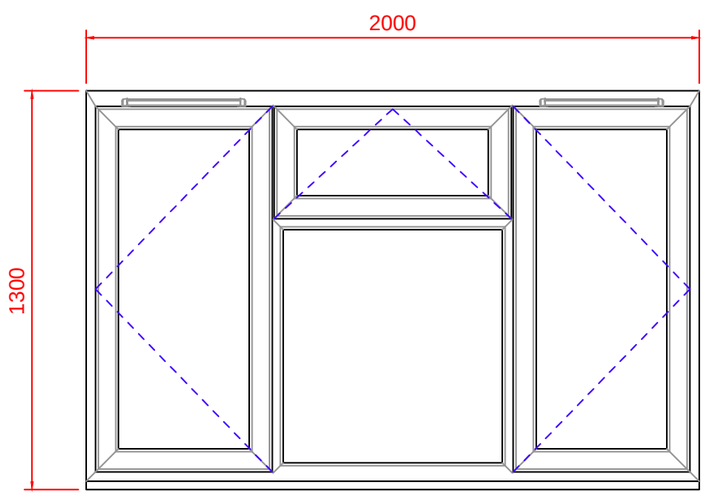

A
PVCu

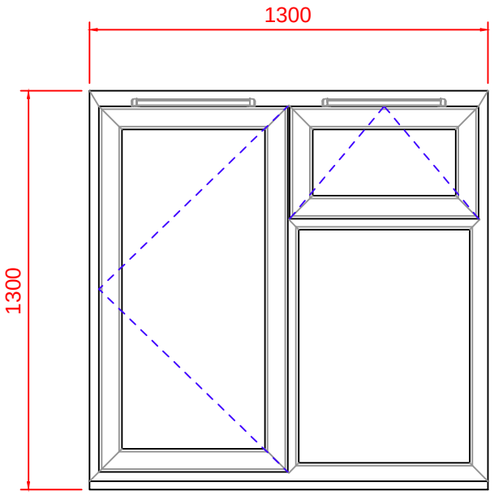

B
PVCu

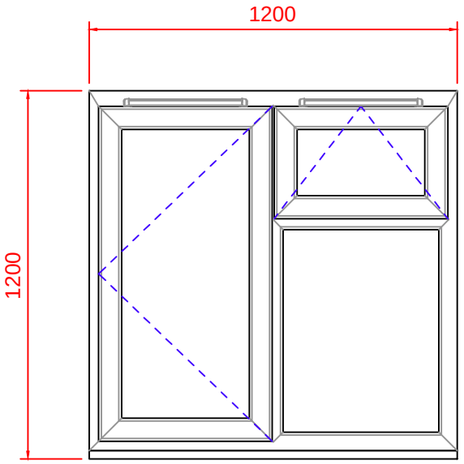

C
PVCu

General Notes

Copyright reserved. Do not scale this drawing. All dimensions to be checked on site.
Drawing errors and omissions to be reported to Ashford Commercial Ltd.

Glazing to be in accordance with current building regulations.
1st floor habitable rooms will be designed to facilitate egress hinges (design and size permitted).
All opening windows to comply with current building regulations part 'B' & part 'K'.
All windows to comply with current building regulations part 'L'.
Ventilation in accordance with building regulations part 'F' and visual impact kept to a minimum.

SITE ADDRESS:
16 Grainger Road, London

TITLE:
Window Designs

CLIENT:
Mulalley - Year 8

PROJECT:
Homes for Haringey Scheme WG08

DRAWN BY:
Simon Hiller

REV:	DATE:	DETAILS:

SCALE: 1:20 @ A3

DATE: November 17 2015

DRAWING STATUS: PLANNING

DRAWING NO. WG08.340

REV:

Ashford COMMERCIAL
7 Folgate Road, Lyngate Industrial Estate,
North Walsham, Norfolk. NR28 0AJ
Tel: 01692 500432 Fax: 01692 500483
email: enquiries@ashfordcommercial.co.uk

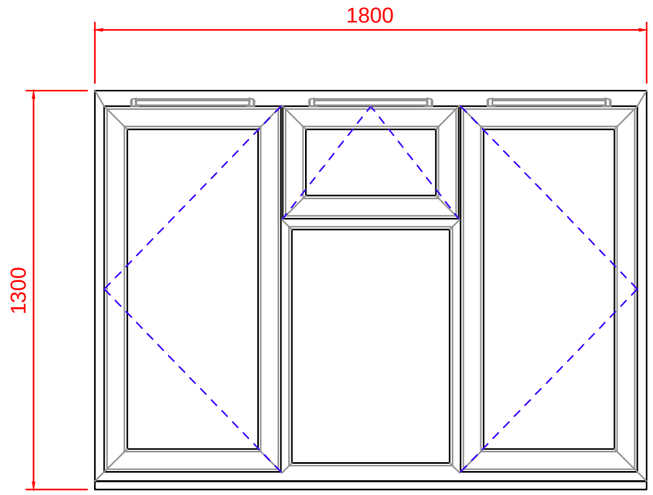

D
PVCu

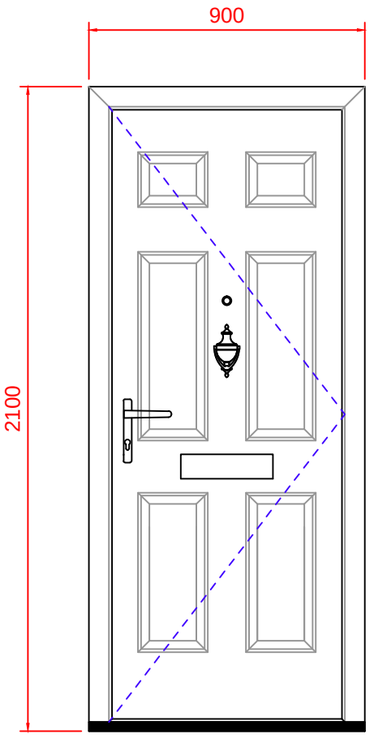

CD1
PVCu

General Notes

Copyright reserved. Do not scale this drawing. All dimensions to be checked on site.
Drawing errors and omissions to be reported to Ashford Commercial Ltd.

Glazing to be in accordance with current building regulations.
1st floor habitable rooms will be designed to facilitate egress hinges (design and size permitted).
All opening windows to comply with current building regulations part 'B' & part 'K'.
All windows to comply with current building regulations part 'L'.
Ventilation in accordance with building regulations part 'F' and visual impact kept to a minimum.

SITE ADDRESS:
16 Grainger Road, London

TITLE:
Window Designs

CLIENT:
Mulalley - Year 8

PROJECT:
Homes for Haringey Scheme WG08

DRAWN BY:
Simon Hiller

REV:	DATE:	DETAILS:

SCALE: 1:20 @ A3

DATE: November 17 2015

DRAWING STATUS: PLANNING

DRAWING NO. WG08.341

REV:

Ashford COMMERCIAL
7 Folgate Road, Lyngate Industrial Estate,
North Walsham, Norfolk. NR28 0AJ
Tel: 01692 500432 Fax: 01692 500483
email: enquiries@ashfordcommercial.co.uk





General Notes

Copyright reserved. Do not scale this drawing. All dimensions to be checked on site.
Drawing errors and omissions to be reported to Ashford Commercial Ltd.

Glazing to be in accordance with current building regulations.
1st floor habitable rooms will be designed to facilitate egress hinges (design and size permitted).
All opening windows to comply with current building regulations part 'B' & part 'K'.
All windows to comply with current building regulations part 'L'.
Ventilation in accordance with building regulations part 'F' and visual impact kept to a minimum.

SITE ADDRESS:
16 Grainger Road, London

CLIENT:
Mulalley - Year 8

TITLE:
Photo Elevations

PROJECT:
Homes for Haringey Scheme WG08

DRAWN BY:
Simon Hiller

REV:	DATE:	DETAILS:

SCALE: NTS

DATE: November 17 2015

DRAWING STATUS: PLANNING

DRAWING NO. WG08.350

REV:

Ashford COMMERCIAL
7 Folgate Road, Lyngate Industrial Estate,
North Walsham, Norfolk. NR28 0AJ
Tel: 01692 500432 Fax: 01692 500483
email: enquiries@ashfordcommercial.co.uk





General Notes

Copyright reserved. Do not scale this drawing. All dimensions to be checked on site.
Drawing errors and omissions to be reported to Ashford Commercial Ltd.

Glazing to be in accordance with current building regulations.
1st floor habitable rooms will be designed to facilitate egress hinges (design and size permitted).
All opening windows to comply with current building regulations part 'B' & part 'K'.
All windows to comply with current building regulations part 'L'.
Ventilation in accordance with building regulations part 'F' and visual impact kept to a minimum.

SITE ADDRESS:
16 Grainger Road, London

TITLE:
Photo Elevations

CLIENT:
Mulalley - Year 8

PROJECT:
Homes for Haringey Scheme WG08

DRAWN BY:
Simon Hiller

REV:	DATE:	DETAILS:

SCALE: NTS

DATE: November 17 2015

DRAWING STATUS: PLANNING

DRAWING NO. WG08.351

REV:

Ashford COMMERCIAL
7 Folgate Road, Lyngate Industrial Estate,
North Walsham, Norfolk. NR28 0AJ
Tel: 01692 500432 Fax: 01692 500483
email: enquiries@ashfordcommercial.co.uk