Thision L

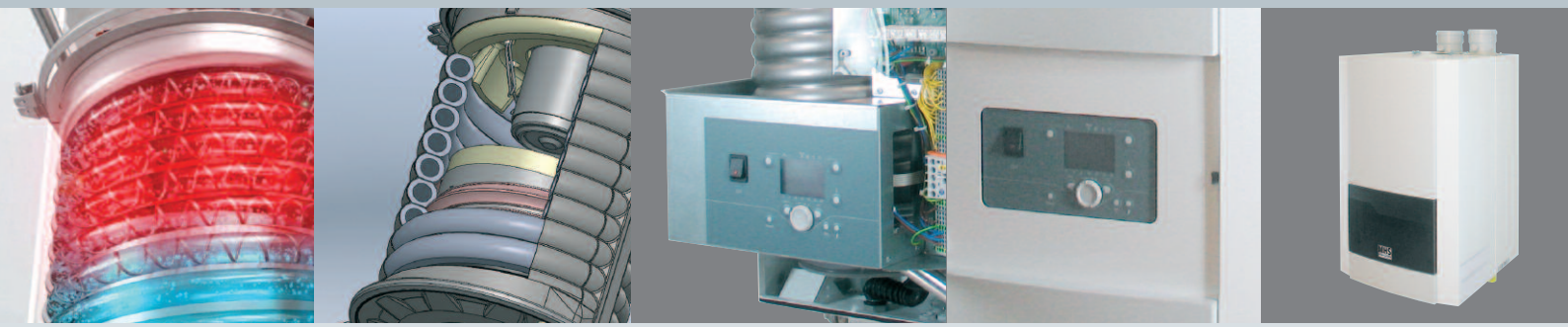

Wall mounted gas fired condensing boilers with individual unit outputs from 48kW to 145kW and multi-boiler cascade sets up to 1140kW

elco heating solutions

Dependable performance and lifelong high efficiency

The Thision L is the latest addition to the popular and extremely well regarded boilers from ELCO UK, and sets new benchmarks in reliability, performance and design features.

Utilising a new state-of-the art double helix finned tube heat exchanger design, which is the product of extensive research, development and field testing, the Thision L wall mounted appliances set new standards in gas fired condensing boiler design.

The cool flame, low emission premix burner system accords extremely low NOx, whilst the all stainless steel construction heat exchanger returns a long and reliable service life of non-fading top level efficiency. The water ways of the unique design heat exchanger consists of a pair stainless steel finned tubes arranged in a vertical double helix and affords low hydraulic resistance.

The 1:6 modulation ratio of the burner control system in the Thision L allows optimum seasonal efficiency through its ability to closely follow changes in load, whilst environmental impact is kept to a minimum through NOx emission of less than 39mg/kWh @ 0% O^2 (which adequately exceeds the requirements for the highest BREEAM credits). Another standard feature is the option to utilise room sealed or open flue systems.

The Thision L boilers are suitable for use in single boiler or multiple/cascade installations and a range of cascade system accessories is available for arrangements of two to eight boilers with output up to a class leading 1140kW.

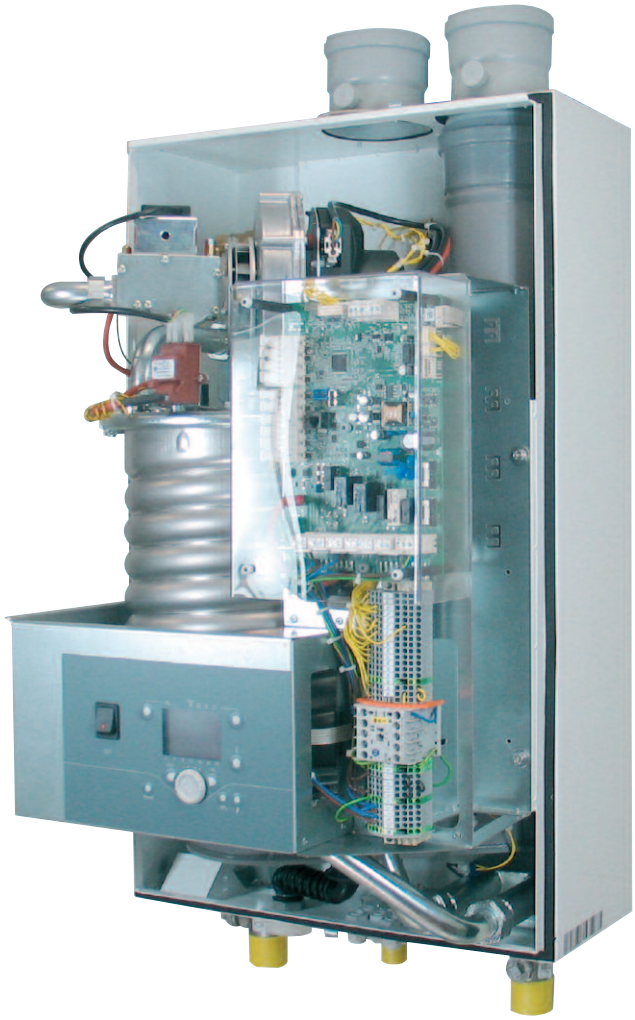

Put your mind at rest

It's easy to ignore your boiler and heating system - until it goes wrong or breaks down. A system failure, especially one caused by lack of maintenance, can be inconvenient and costly.

It isn't hard to imagine the difficulties that problems with your heating system can cause. And in some situations lack of heating and hot water can be critical. Similar to your car, a regularly maintained heating system will run more efficiently and any potential problems can be resolved before they develop into major system failure. Financially, planned maintenance makes sense too. It avoids major capital outlay and the associated costs of system down time - plus it can keep your fuel costs down as well as ensuring you are minimising your emissions.

At ELCO UK we provide a maintenance and service solution for your boiler - enabling you to rest safe in the knowledge that we'll take care of it.

Go to www.mhsboilers.com and download or request a copy of our Maintenance and Service Solutions brochure.

Please contact our service department and we will be delighted to arrange a quotation:

Tel : 01268 546770 or e-mail: service@elco.co.uk





Our highly skilled and trained service and technical support engineers are only a phone call away

Features

Quality

Exceptional high quality & unequalled lifetime high efficiency through the use of corrosion resistant stainless steel as a heat exchanger material.

Compact dimensions

Mindful that space is at a premium in commercial buildings, the Thision L delivers high power from minimal space requirements.

Controls options

The Thision L series boilers may be installed as single appliances or in cascade/ multiple boiler arrangements of up to 16 appliances. Time and temperature control over a hot water cylinder and heating zones is easily possible via the use of optional additional control components. Up to eight heating circuits, either constant flow or with VT mixing valves may controlled in conjunction with a single boiler or a cascade arrangement. It is also possible to use either constant speed boiler primary pumps or with the inclusion of an optional interface, modulating speed pump/s may be controlled leading to enhanced boiler operational efficiency and reduced pump electricity consumption. See page 8 for details.

Extreme efficiency

An all stainless steel heat exchanger coupled with a modulating radiant premix burner with turndown to 16% of maximum output, the Thision L boilers can return annual efficiency >110% net. The working principle of the heat exchanger is “cross-flow” where the water flows in an upward direction and the flue gasses flow downward, and with this operation, the most efficient combustion results are obtained.

Radiant premix burner

The use of a metal fibre sheathed burner brings about a lower flame temperature and a higher degree of radiant heat emission, which in turn significantly reduces the production of NOx.

Low hydraulic resistance

Utilising an arrangement of generous bore, twin water tubes in helical fashion, the pressure loss of the heat exchanger is extremely low for an appliance of its type which avoids the need to use high head pumps.

Inherent reliability

With all solid state controls, and moving parts confined to the gas valve and fan there is little to wear through usage, plus all components are sensibly laid out within the uncluttered frame making maintenance a simple task.

Very low operating noise

At just 50 / 56 dB(A) at a distance of 1m, the Thision L series are extremely quiet making them an ideal appliance to choose in noise sensitive applications such as residential blocks, schools and libraries etc.

Varied fluing possibilities

The appliance may take air for combustion from the room or it may be room sealed using a parallel tubes or concentric tubes arrangement.

Warranty

As standard the Thision L carries a 24 month warranty (see terms and conditions of sale).

All guarantees are against manufacturing or material defects only.

First annual service

Included in the purchase price of the boiler is the first annual regular service visit.




MHS
BOILERS





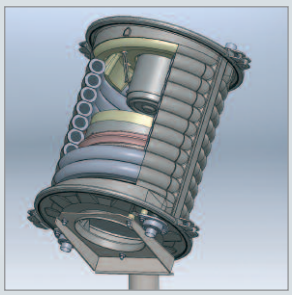

Technical data

Model			TH-L50	TH-L65	TH-L85	TH-L100	TH-L120	TH-L145
Nominal heat output 80/60°C		kW	7.5–45.1	10.1–60.8	13.4–81.1	15.6–92.9	18.7–111.6	23.3–132.2
Nominal heat output 40/30°C		kW	8.3–48.0	11.1–63.9	14.8–85.3	17.2–100.0	20.6–120.0	25.6–142.3
Nominal heat input	Gross	kW	8.54–51.27	11.5–69.2	15.3–92.4	17.7–105.6	21.3–126.8	26.5–150.3
Nominal heat input	Net	kW	7.7 – 46.2	10.4–62.4	13.8–83.3	16.0–95.2	19.2–114.3	23.9–135.5
Energy efficiency[1]			A/A	A/A	-	-	-	-
[2] Boiler seasonal efficiency (gross)		%	94.86	94.85	94.83	94.87	94.87	94.86
Max flow temperature		°C	90	90	90	90	90	90
Water content		litres	4.0	4.0	4.7	6.5	8.0	9.4
Design temperature rise (Δt)		°C	20	20	20	20	20	20
Nominal water flow @ Δt 20K (°C)		l/s	0.52	0.72	0.94	1.11	1.33	1.55
Hydraulic resistance at nominal water flow		kPa	9	16	29	15	22	34
Nominal residual head of optional extra std boiler pump		kPa	26	17	22	14	25	30
Min/Max operating pressure		bar	1.7 / 6.0					
Gas consumption Nat Gas (G20) @ max load		m^3/h	4.2	5.7	7.6	8.7	10.5	12.4
Gas consumption LPG (G31) @ max load		kg/h	3.6	4.9	6.5	7.4	8.9	10.6
Gas inlet press min/nom. Nat Gas (G20)		mbar	17/20					
Gas inlet press min/max LPG (G31)		mbar	30/50	30/50	30/50	30/50	30/50	30/50
Approx flue gas volume max @ max load		m^3/h	88	119	159	178	213	253
NOx level @ 0% O^2 (max)		mg/kWh	39	39	39	39	39	39
Approx flue gas temperature @ 80/60°C system operation min/max		°C	63/76	63/76	63/76	63/76	63/76	63/76
Maximum system flue resistance Pa			150	150	150	150	200	200
Gas connection			R ¾"	R ¾"	R ¾"	R1"	R1"	R1"
Flow/return connections			R1¼"	R1¼"	R1¼"	R1½"	R1½"	R1½"
Air supply connection		mm	100	100	100	100	100	130
Flue connection		mm	100	100	100	100	100	130
Condensate waste connection		mm	22	22	22	22	22	22
Nominal weight (dry)		kg	60	60	68	80	90	97
Noise level @ 1m distance (room sealed/non room sealed)		dB(A)	50 / 56					
Electrical supply (50Hz)		V	230	230	230	230	230	230
Mains connection fuse rating		A	10	10	10	10	10	10
Power consumption boiler (excl pump) min/max		W	25/80	26/98	38/167	30/195	36/228	44/248
Power consumption pump (optional extra)		W	150	150	205	150	210	385

[1] Energy efficiency class (space heating): Product/System according to Directive 2010/30/EU and Regulation (EU) 811/2013
Gas Category II 2H3P/B
Appliance Category B23, C13, C33, C43, C53, C63, C83
CE Product Identification Number 0063BU9068
[2] Calculated using the formula given in Equation 2[9] in the Non-Domestic Building Services Compliance Guide

Dimensions & clearances

Front View

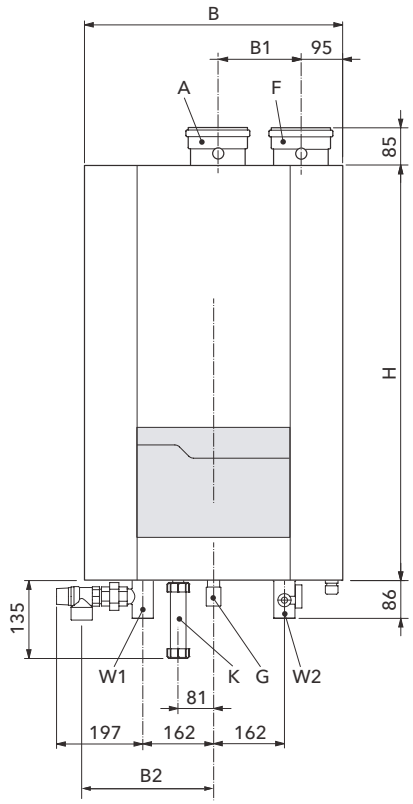

Side View

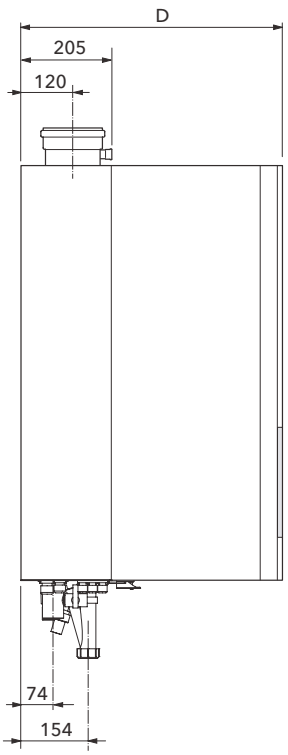

Rear View

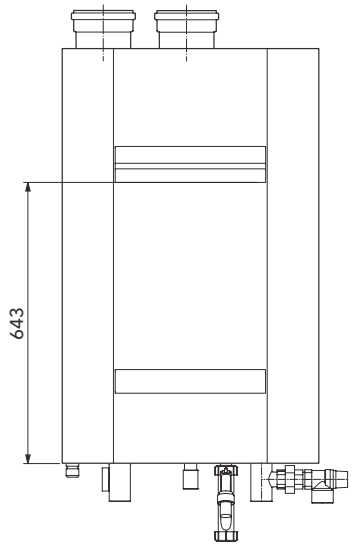

Bottom View / Clearances

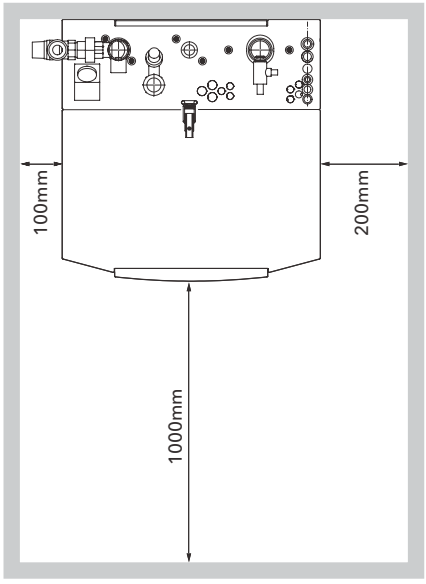

Dimensions		TH-L50	TH-L65	TH-L85	TH-L100	TH-L120	TH-L145
B	mm	490	490	490	590	590	590
B1	mm	140	140	140	140	140	190
B2	mm	245	245	245	295	295	295
D	mm	500	500	500	600	600	600
H	mm	810	810	810	950	950	950
W1 (Flow)	mm	R1¼"	R1¼"	R1¼"	R1½"	R1½"	R1½"
W2 (Rtn)	mm	R1¼"	R1¼"	R1¼"	R1½"	R1½"	R1½"
G (Gas)	mm	R ¾"	R ¾"	R ¾"	R1"	R1	R1"
F (Flue)	mm	100	100	100	100	100	130
A (Air)	mm	100	100	100	100	100	130
K	mm	22	22	22	22	22	22

Controls and Options

The ability to control the charging of an indirect hot water cylinder, with time scheduling is a standard feature of the Thision L boilers. Heating circuits, either, constant temperature, weather variable via mixing valves or weather variable via direct-on-boiler compensation may be controlled by the inclusion of optional extra control components as listed below. Multiple boiler cascade control systems are easily created by the inclusion of bus communication modules in the boilers.

Outside air temperature sensor

QAC34. Allows weather compensated heating flow circuit flow temperatures to be provided. **QAC34 Wireless**. As above but with the inclusion of an **AVS13** wireless transmitter. This kit must be used in combination with the wireless receiver unit **(AVS71)** to enable wireless communication between the outside air temperature sensor and the boiler.

Heating zone sensor

QAD36. Heating zone clamp-on temperature sensor, for use when any heating zone included in the control scheme is weather compensated and the variable flow temperature is controlled via a mixing valve.

Header/hot water sensor

QAZ36. Kit includes a QAZ36 sensor with 6m lead and a ½" BSP threaded sensor pocket for use either as a (low loss) header sensor or as a hot water cylinder temperature sensor. sensor and the boiler.

Room unit

QAA75. Room unit for the time and temperature control of any connected heating zone. Every heating zone may have an individual room unit connected, providing for differing time and temperature scheduling in different areas of a building if desired. **QAA78 Wireless**. Using wireless communication, the QAA78 device provides the same control features as the conventionally wired QAA75 unit described above. The QAA78 Wireless unit must be used in combination with the wireless receiver unit **(AVS71)** to enable wireless communication between the room control unit and the boiler.

Wireless Receiver

AVS71. When connected to a Thision L boiler it can transmit and receive data between wireless room units (QAA78) and / or receive information from a wireless outside air temperature sensor arrangement (QAC34 +AVS13).

Extension modules

AGU2.550. Including a communication cable for connection to the boiler's control system, up to 3 AGU2.550 extension modules may be installed into a Thision L boiler. Modules 1 & 2 for the control of heating zones (one module per heating zone, with the capability to drive a heating zone circulation pump and a 3 way mixing valve (if fitted)). Module 3 is used if it is required to control an external gas valve.

Up to 2 x AGU2.550 extension modules for the control of heating zones may be installed per boiler in a cascade installation, for the control of up to a maximum of 8 heating zones per system. Up to a maximum of 8 heating zones may also be controlled in conjunction with a single boiler if required, with zones 1 & 2 being controlled by 2 x AGU2.550 extension modules installed within the boiler, and zones 3 to 8 being controlled by Logon B controllers (see below).

AGU2.551. Including a communication cable for connection to the boiler's control system, the AGU2.551 is used when a speed controlled 0-10V (modulating) boiler pump is utilised. It will also provide a 0-10V output feedback signal to a BMS system for boiler firing rate monitoring purposes.

Logon B with wall hung box

A wall mounted console including a controller which allows the connection and control of up to 2 additional heating zones and an additional hot water cylinder.

Cascade Controls

(Up to 16 boilers may be included within a cascade control arrangement) Cascade kit - Master. Kit includes an OCI345 communication module and a (QAZ36) header sensor. The communication module is mounted within the first (master) boiler of a multiple boiler cascade installation.

Cascade kit - Slave. Kit includes an OCI345 communication module. A Cascade kit – Slave is required to be installed within every additional boiler (over and above the Master) in a cascade installation.

Accessories – Wall Mounted Low Loss Headers

As an aid to installation, a range of wall mounted prefabricated vertical low velocity headers are available for either single boiler applications or installer fabricated multi – boiler installations. Prefabricated insulating jackets for the headers are also available.

Vertical Low Velocity Headers						
Data		**Type A**	**Type B**	**Type C**	**Type D**	**Type E**
Tappings	a	½" BSP-F	½" BSP-F	½" BSP-F	½" BSP-F	½" BSP-F
Tappings	b	1¼" BSP-F	2" BSP-F	2" BSP-F	2½" BSP-F	3" BSP-F
W	mm	50	60	100	120	150
Depth	mm	50	60	100	120	150
Distances from wall to L Tappings	mm	205	205	205	205	205
G	mm	285	280	470	470	470
H	mm	345	350	540	570	570
I	mm	44	44	44	66	66
J	mm	95	120	120	120	120
K	mm	44	44	44	44	44
Duty @ 20k Δt	kW	Up to 90	91 to 155	156 to 300	301 to 500	501 to 600

Type	LLH65	LLH100
a1 (boilers)	DN65 PN16	DN100 PN16
a2 (system)	DN65 PN16	DN100 PN16
b (air vent tapping)	¾" BSP Female	¾"BSP Female
c (sensor tapping)	½" BSP Female	½" BSP Female
d (tapping for drain)	¾" BSP Female	¾" BSP Female
D1	350mm	475mm
H1	935mm	1150mm
H2	445mm	620mm
H3	305mm	460mm
H4	290mm	330mm

Note:
Vertical low velocity headers are reversible in order that they may be installed at either the left hand side, or right hand side of a boiler/s installation.

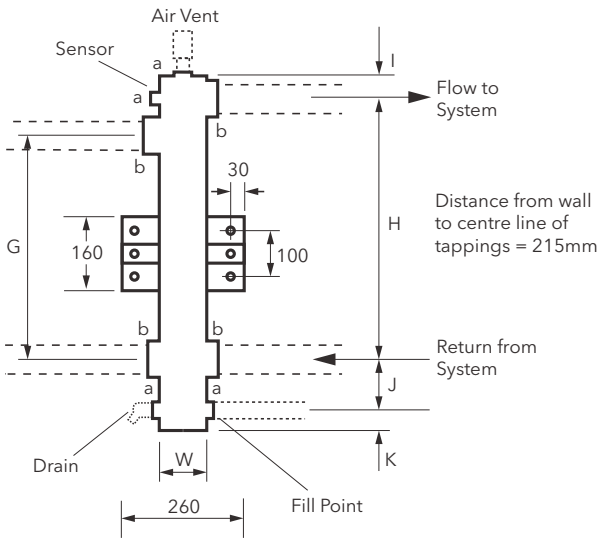

Standard type low loss header for boiler cascade systems

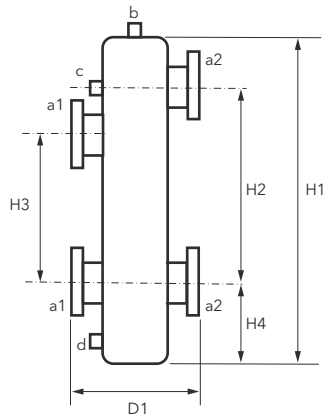

Accessories - Cascade Systems

The cascade system optional accessories shown in the following drawings consist of the mounting frame components complete with interconnecting gas and water pipes (boiler cascade set), and also the cascade installation flue headers (flue cascade set), and which are two separate sets of components designed to complement one another.

The boiler cascade set may be utilised with suitable alternative flue arrangements as/if necessary. The cascade flue sets are purpose designed and matched kits of components fabricated from corrosion resistant PPS material. The individual branches are connected into the main header via a swept arrangement to ensure minimum resistance to flow and they are engineered to provide the correct fall back towards the (included) condense waste outlet syphon. A very important feature of the cascade flue set is the inclusion of a non return valve in each individual boiler flue leg which prevents the possibility of flue gas recirculation from operating appliances into any non-firing unit.

Options: Cascade systems are available for "Wall-Mounting In-Line" for 2 to 6 boilers, "Free-Standing In-Line" for 2 to 6 boilers and Free-Standing Back-to-Back from 3 to 8 boilers. Also available, to compliment the cascade pipe work sets are preformed easy-to-fit insulation sets, which not only reduce heat loss and plant room temperatures but also create pleasing aesthetics for the completed cascade installation.

Cascade Wall-Mount In-Line (in a row on the wall)

CWL2	CWL3	CWL4	CWL5	CWL6
				

Cascade Free-Standing In-Line (in a row free standing)

CFL2	CFL3	CFL4	CFL5	CFL6
				

Cascade Free-Standing Back-to-Back (back to back free standing)

CFBB3	CFBB4	CFBB5	CFBB6	CFBB7	CFBB8
					

The Cascade sets are available with an option of either a standard low loss header or a header that incorporates also dirt and air separation features. Both types of header are available with system connection sizes of either DN65 for outputs up to 462kW or DN100 for outputs from 463 to 1140kW @ Δt 20K

For complete hydraulic separation, cascade sets incorporating a plate type heat exchanger (as an alternative to a low loss header) are available for duties up to 462kW.

Guidance for selection of cascade (water) header connection size

DN65 Connections (for outputs up to 462kW)

	Number of Boilers				
	2	3	4	5	6
Boiler Models	2 x Any Th-L Model	3 x Any Th-L Model	4 x TH-L50	5 x TH-L50	6 x TH-L50
			4 x TH-L65	5 x TH-L65	6 x TH-L65
			4 x TH-L85	5 x TH-L85	6 x TH-L85
			4 x TH-L100	5 x TH-L100	
			4 x TH-L120		

DN100 Connections (for outputs 463kW to 1140kW)

	Number of Boilers				
	4	5	6	7	8
Boiler Models	4 x TH-L145	5 x TH-L120	6 x TH-L100	7 x Any TH-L Model	8 x Any TH-L Model
		5 x TH-L145	6 x TH-L120		
			6 x TH-L145		

Cascade Systems Dimensions

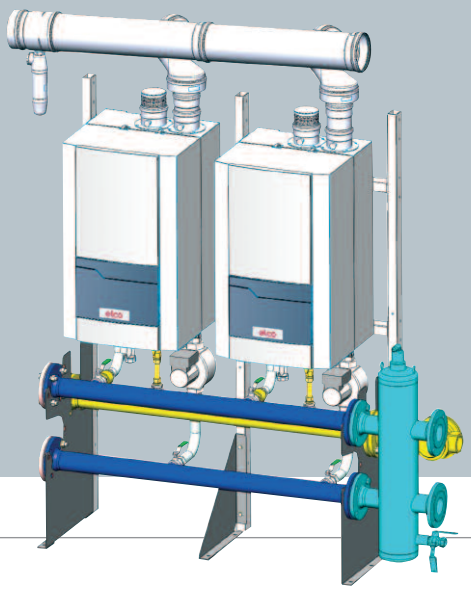

In-Line systems with Low Loss Header with DN65 Connections

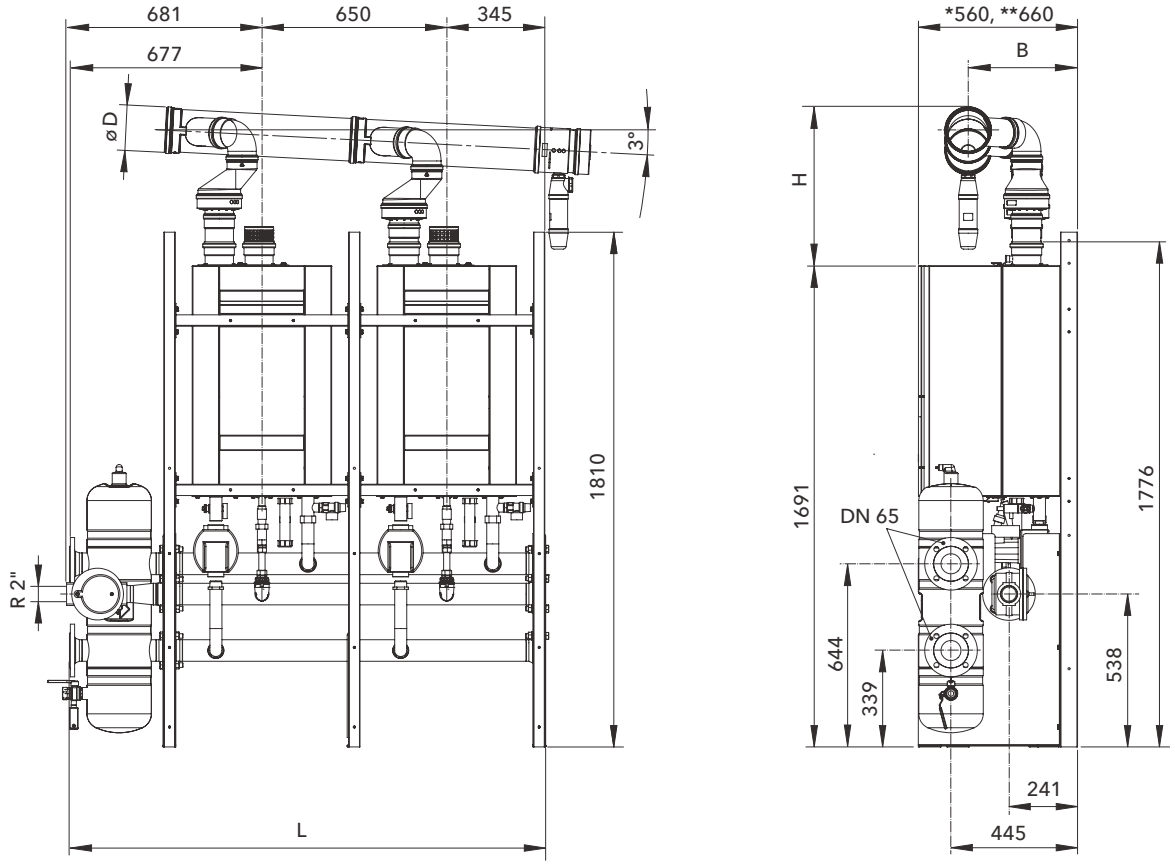

The low loss headers shown in the above diagram depict the optional unit which includes dirt and air separation features.
As an alternative, a standard type unit is available, see page 9 for details.
See page 17 for guidance on selection/suitability of flue cascade common header diameter.

Number of Boilers			2	3	4	5	6
		L mm	1672	2322	2972	3622	4272
øD = 150mm	**B** = 400 - 450	**H** mm	553	646	738	831	924
øD = 200mm	**B** = 350 - 450	**H** mm	616	709	801	894	987

* = Thision L 50 - 85, ** = Thision L 100 - 145

Note: maximum output with DN65 system water connections is limited at 462kW @ Δt 20K

Cascade Systems Dimensions

In-Line systems with Low Loss Header with DN100 Connections

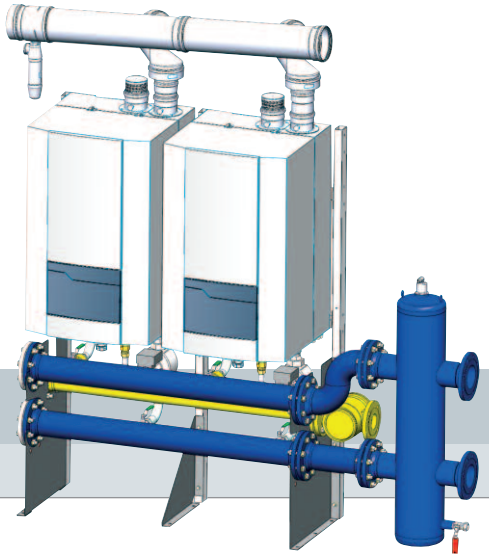

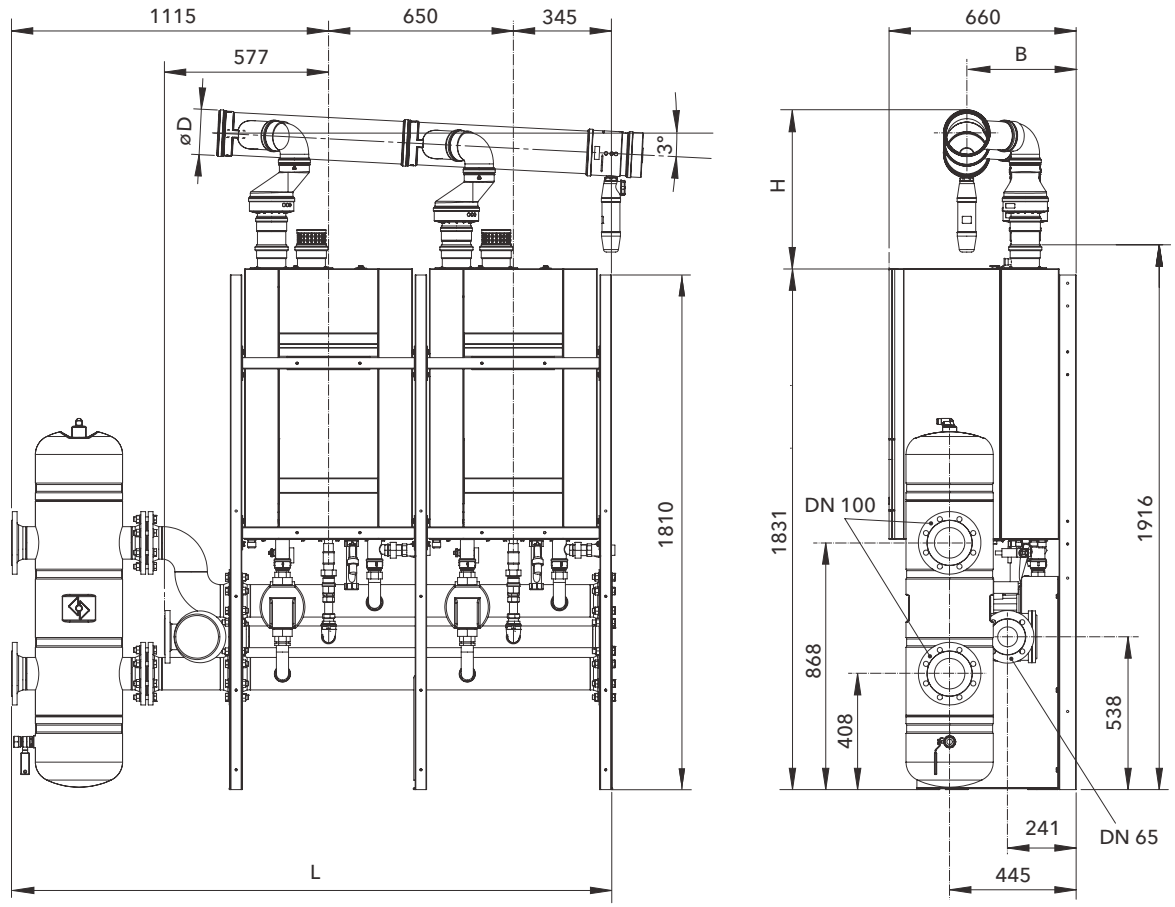

The low loss headers shown in the above diagram depict the optional unit which includes dirt and air separation features.
As an alternative, a standard type unit is available, see page 9 for details.
See page 17 for guidance on selection/suitability of flue cascade common header diameter.

Number of Boilers			4	5	6
		L mm	3407	4057	4707
øD = 150mm	**B** = 400 - 450	**H** mm	738	831	924
øD = 200mm	**B** = 350 - 450	**H** mm	801	894	987

Cascade Systems Dimensions

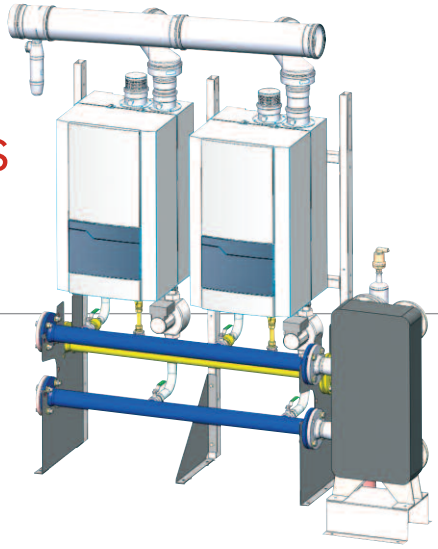

In-Line systems with plate type heat exchanger with DN80 connections

Heat Exchanger Type / Duty			
Boiler Models		**TH - L 50 - 85**	**TH - L 100 - 145**
Δt 10K	**kW**	**>250**	**251 - 462**
	Type	CB200-30M	CB200-64M
Δt 15K - 20K	**kW**	**>250**	**251 - 462**
	Type	CB200-30M	CB200-50M

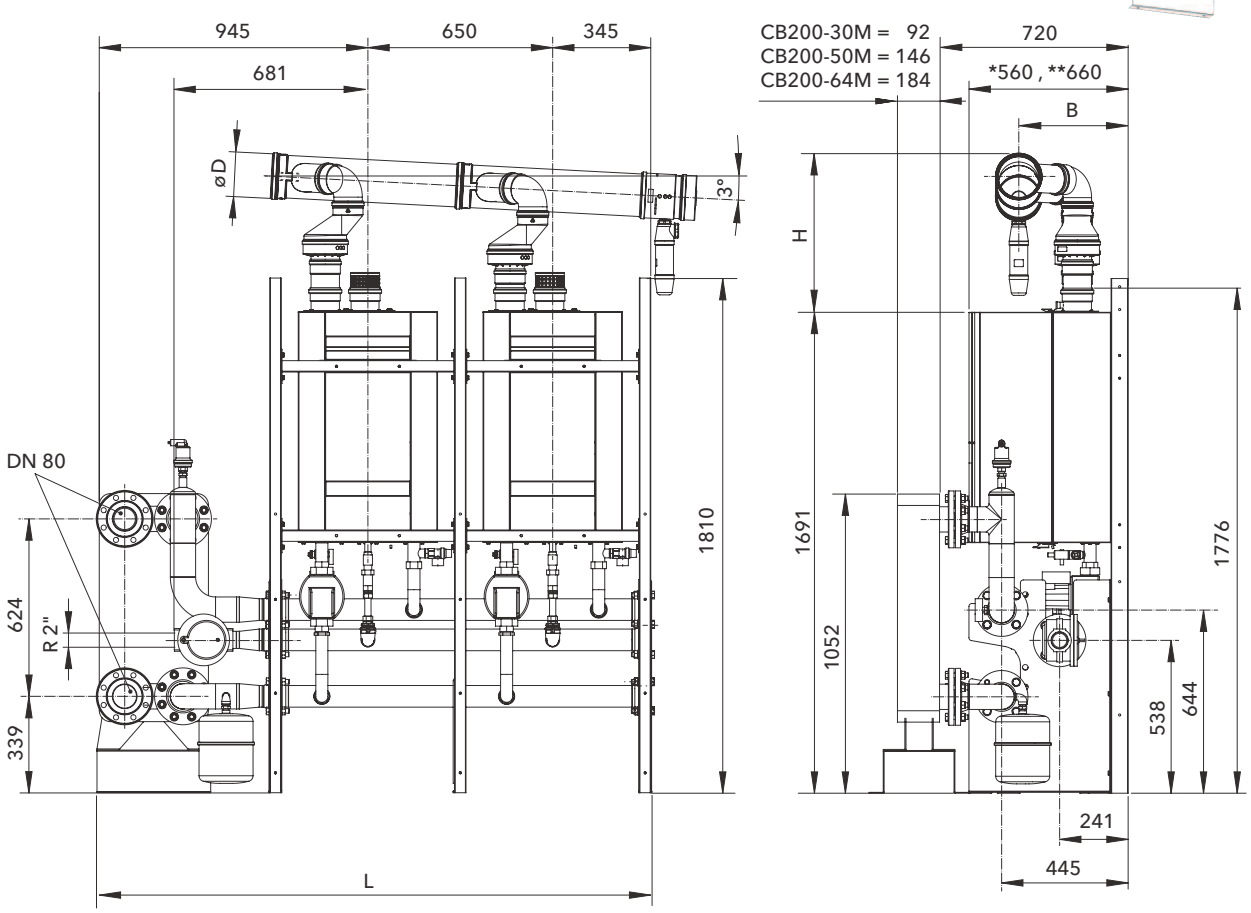

See page 17 for guidance on selection/suitability of flue cascade common header diameter.

Number of Boilers			2	3	4	5	6
		L mm	1940	2590	3240	3890	4540
øD = 150mm	**B** = 400 - 450	**H** mm	553	646	738	831	924
øD = 200mm	**B** = 350 - 450	**H** mm	616	709	801	894	987

* = Thision L 65-85, ** = Thision L 100 - 145

Note: the In-Line cascade system incorporating a plate heat exchanger as the interface between the boiler set and the system is limited to 462kW (as per the heat exchanger type and duty table at the top of the page). Ensure that the numbers of boilers selected, multiplied by their individual output, does not exceed a maximum of 462kW. Plate heat exchangers by others must be utilised for installations of outputs greater than 462kW.

Cascade Systems Dimensions

Back-to-Back systems with Low Loss Header with DN65 Connections

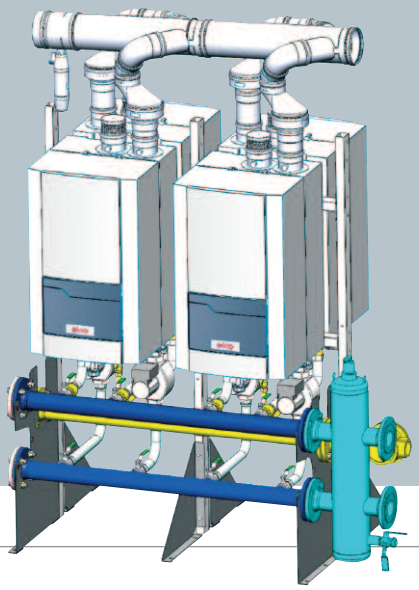

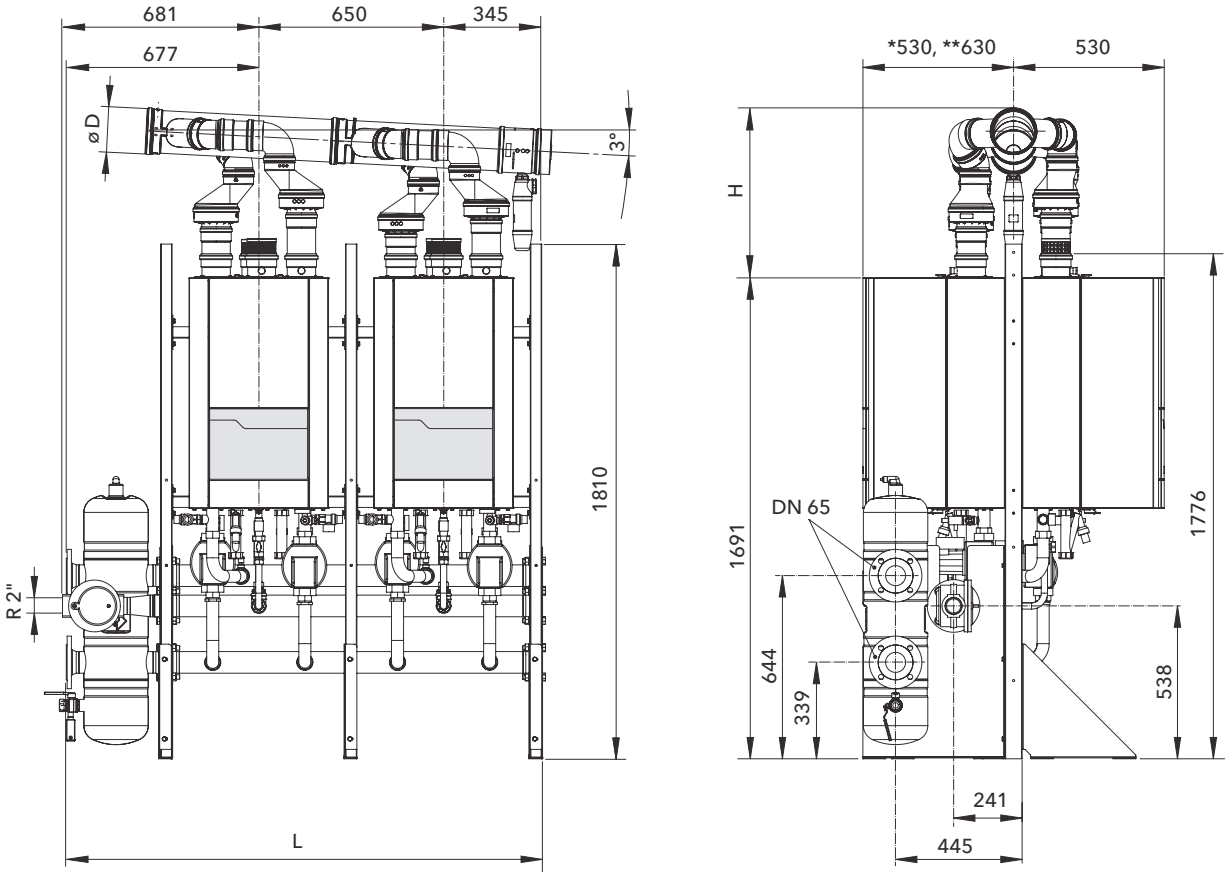

The low loss headers shown in the above diagram depict the optional unit which includes dirt and air separation features.
As an alternative, a standard type unit is available, see page 9 for details.
See page 17 for guidance on selection/suitability of flue cascade common header diameter.

Number of Boilers		3 - 4	5 - 6
	L mm	1672	2322
øD = 150mm	**H** mm	553	646
øD = 200mm	**H** mm	616	709

* = Thision L 50 - 85, ** = Thision L 100 - 145

Note: maximum output with DN65 system water connections is limited at 462kW @ Δt 20K

Cascade Systems Dimensions

Back-to-Back systems with Low Loss Header with DN100 Connections

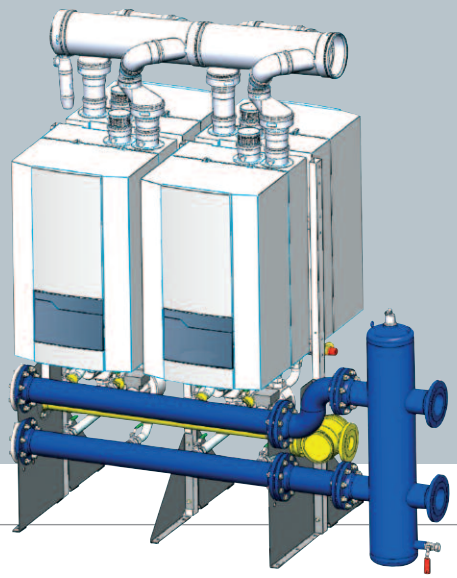

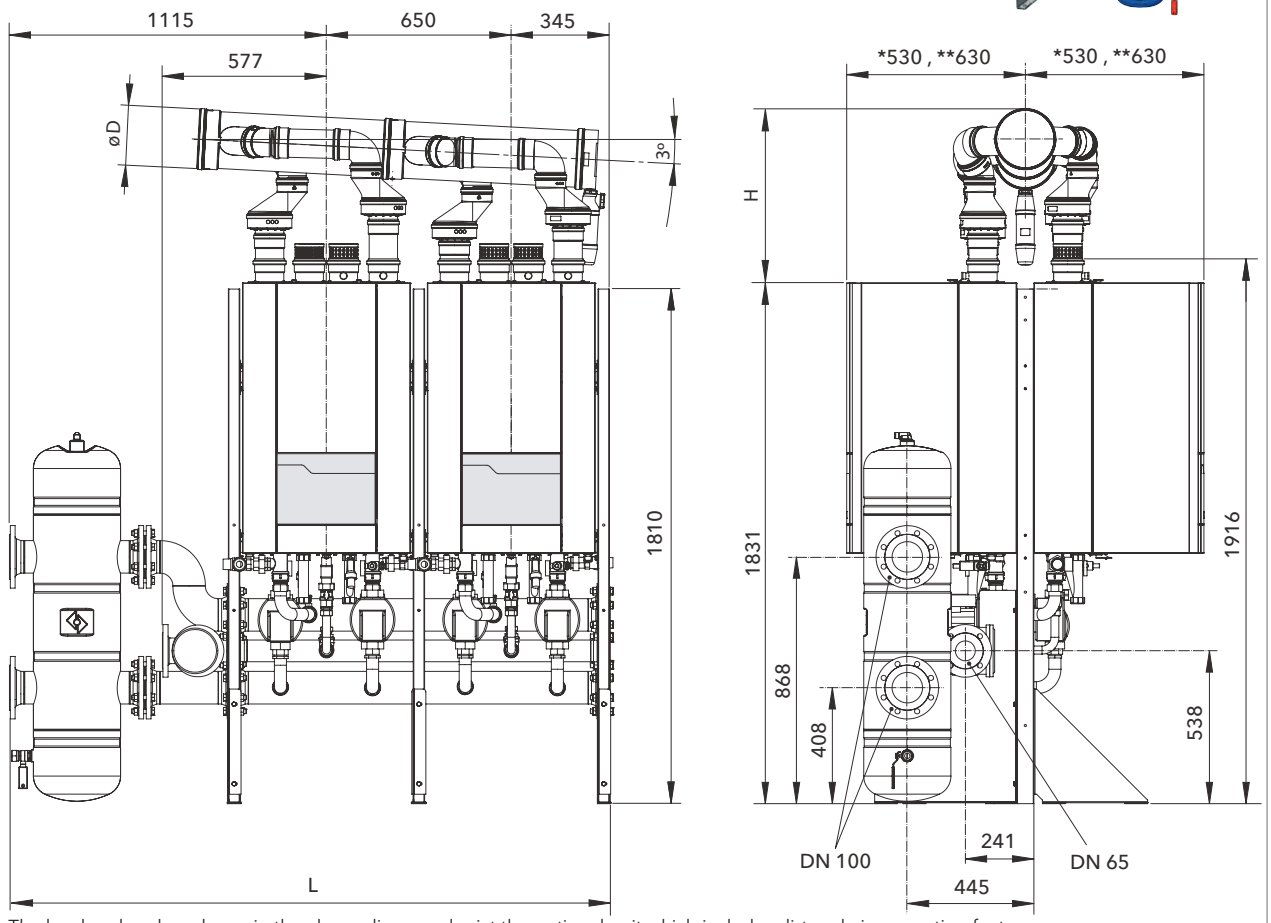

The low loss headers shown in the above diagram depict the optional unit which includes dirt and air separation features.
As an alternative, a standard type unit is available, see page 9 for details.
See page 17 for guidance on selection/suitability of flue cascade common header diameter

Number of Boilers		3 - 4	5 - 6	7 - 8
	L mm	2107	2757	3407
øD = 150mm	**H** mm	53	646	738
øD = 200mm	**H** mm	616	709	801

* = Thision L 65-85, ** = Thision L 100 - 145

Cascade Systems Dimensions

Back-to-Back systems with plate type heat exchanger with DN80 connections

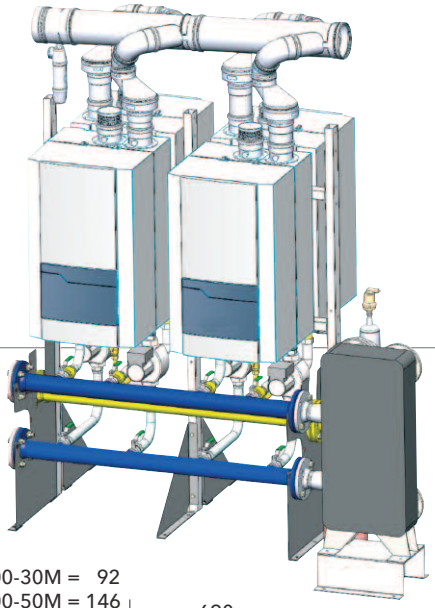

Heat Exchanger Type / Duty			
Boiler Models		**TH - L 50 - 85**	**TH - L 100 - 145**
Δt 10K	**kW**	**>250**	**251 - 462**
	Type	CB200-30M	CB200-64M
Δt 15K - 20K	**kW**	**>250**	**251 - 462**
	Type	CB200-30M	CB200-50M

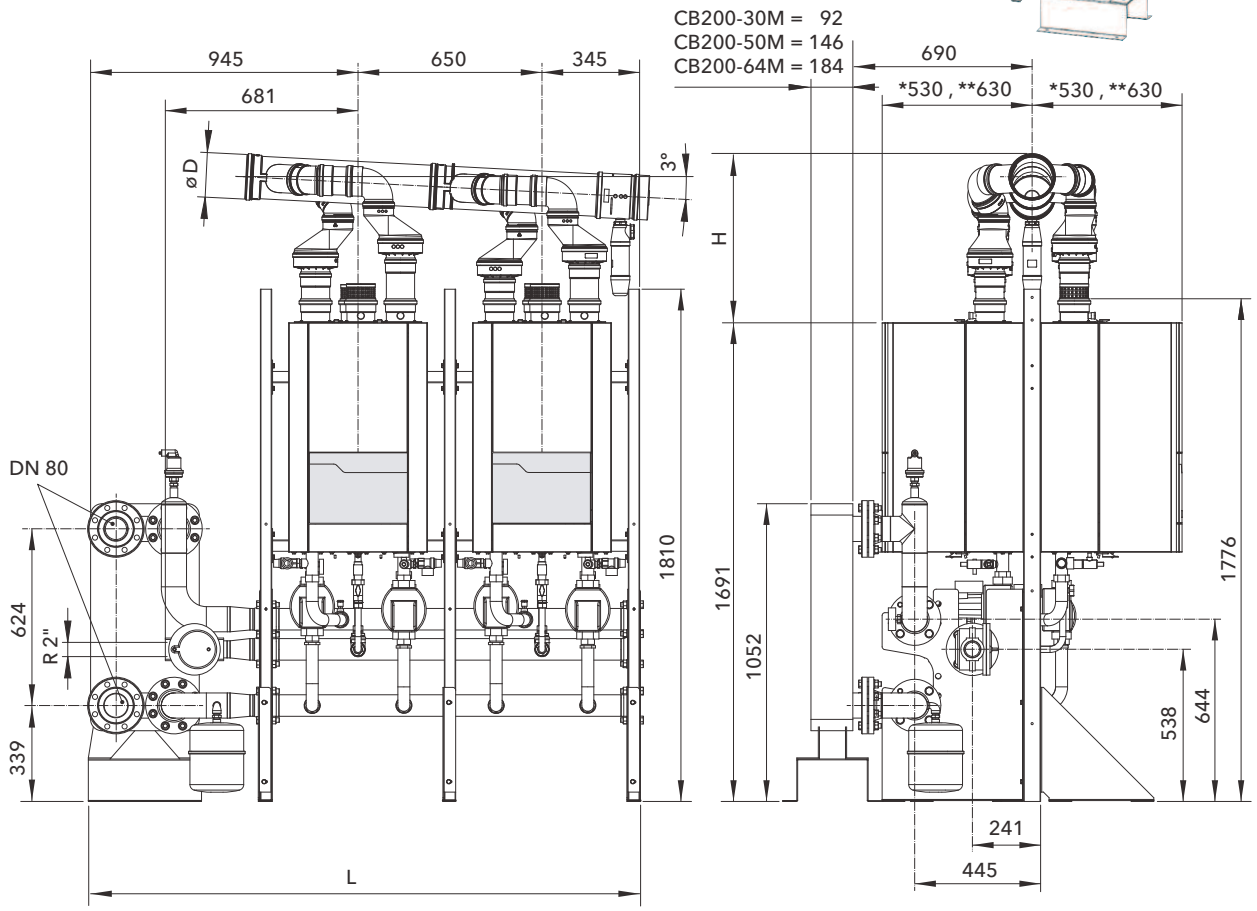

See page 17 for guidance on selection/suitability of flue cascade common header diameter.

Number of Boilers		3 - 4	5 - 6	7 - 8
	L mm	1940	2590	3240
øD = 150mm	**H** mm	553	646	738
øD = 200mm	**H** mm	616	709	801

* = Thision L 65-85, ** = Thision L 100 - 145

Note: the Back-to-Back cascade system incorporating a plate heat exchanger as the interface between the boiler set and the system is limited to 462kW. Ensure that the numbers of boilers selected, multiplied by their individual output, does not exceed a maximum of 462kW. Plate heat exchangers by others must be utilised for installations of outputs greater than 462kW.

Flue Systems

The optional flue cascade sets are available in either 150mm or 200mm diameter for both the "In-Line" and "Back-to-Back" boiler cascade sets.

The diameter of the horizontal collector part of the flue cascade sets (150 or 200mm diameter) and the vertical chimney (from the flue cascade set to the terminal position) depends upon the total heat output of the installation (based upon full load boiler heat output @ 80/60°C – see technical data on page 6) and the vertical height of the chimney. Prefabricated cascade sets are available for cascade boiler installations of up to 834kW output (see table below).

The table shows the maximum system output related to the vertical chimney length (based upon a maximum horizontal length of 3m after the flue cascade set and the diameter (collector diameter/chimney diameter).

Example: The maximum heat output of a cascade installation of Thision – L Boilers when using a 200mm diameter flue cascade set, connected to a 250mm diameter vertical chimney of 15m height is 658kW.

Maximum output (kW) o f boiler cascade @ 80/60°C by flue cascade diameter and vertical chimney length

Diameter (collector Ø/ chimney Ø)	Vertical chimney Length		
	5m	15m	30m
150mm / 150mm	319	305	281
150mm / 200mm	439	402	361
200mm / 200mm	517	488	470
200mm / 250mm	680	658	630
200mm / 300mm	834	815	777

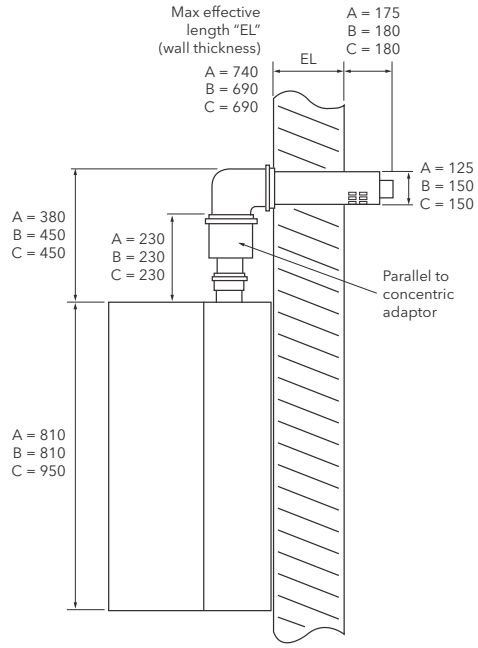

A = Boiler models Thision L 50 & 65

B = Boiler model Thision L 85

C = Boiler models Thision L 100, 120 & 145

As standard Thision L boilers have independent connections for combustion air supply and flue gas (parallel tubes). To utilise a concentric flue system, either 80/125 for the models 50 & 65 or 110/150 for all other models, an adaptor is required as shown in the diagram on the left. A horizontal flue arrangement is shown but the adaptor may also be used for a vertical concentric flue installation.

Guidance on flue systems for single boilers

Model Thision L	Flue gas temperature @ flow /return 80/60°C	Flue gas volume	Maximum flue system resistance
	°C	m³h	Pa
50	76	88	150
65	76	119	150
85	76	159	150
100	76	178	150
120	76	213	200
145	76	253	200

Model Thision L	*Maximum length of straight flue pipe in metres				
	Ø 80mm	Ø 100mm	Ø 110mm	Ø 125mm	Ø 130mm
50	17	70			
65	10	65			
85		30	51		
100		20	34	42	44
120		32	54	68	70
145		18	31	38	40

*Includes an allowance for up to 1.5m of horizontal flue pipe and 2 x 87° bends in the connector piece from the boiler to the main straight flue pipe installation.

The above listed maximum lengths of flue pipe are relative to an open flue type installation; if the installation is room sealed then the lengths apply to air inlet and flue pipe lengths combined.

For every bend that is introduced into the system, the maximum length must be reduced by 1m.

The maximum horizontal length of flue pipe that may be installed is 20m; burner ignition difficulties may result from longer horizontal lengths.

Model Thision L	Maximum length of straight concentric flue pipe in metres	
	Ø 80/125mm	Ø 110/150mm
50	9	12
65	5	7
85	-	6
100	-	5
120	-	6
145	-	4

System water

All systems must be thoroughly cleansed prior to connection of the boiler and the system water must be dosed with a good quality water treatment to prevent corrosion within the system and formation of scale within the boiler waterways. For detailed guidance on water quality, refer to either the installer guide or the planning documentation which is available by visiting ELCO UK web site @ www.mhsboilers.com

The chloride content of the fill water must not exceed 50mg/l and the PH should be in the range 8.0 to 9.5. Particular care must be taken when installing the boiler onto an old system, with consideration given to the installation of the optional extra separation "plate heat exchanger kit" or a dirt arrester/filter.

For specialist advice and water treatment products, contact: Cookson Electronics (Fernox) Forsyth Road, Sheerwater, Woking Surrey GU21 5RZ Tel: 01483 793200 or Betz Dearborn Ltd, Foundry Lane Widnes, Cheshire WA8 8UD. Tel: 0151 495 1861

Installation requirements

Thision L series boilers should be installed in accordance with the relevant requirements of the Building Regulations, Health and Safety Executive Regulation PM5, IEE Regulations, Gas Safety (Installation and Use) Regulations, National and Water Bylaws and any Insurance Company requirements.

Codes of practice

The following list of codes of practice give guidance on the requirements for system design and installation.

BS 6880-2:1988
Code of Practice for low temperature hot water heating systems for output greater than 45kW.

BS 6644:2005+A1:2008
Installation of gas-fired hot water boilers of rated inputs between 70kW (net) and 1.8MW (net).

BS EN 12828:2003
Heating systems in buildings - design for water based heating systems.

CISBE Guide
Reference sections B7, B11 and B13.

IGE/UP/2 Gas installation pipework and compressors on industrial and commercial premises.

I**GE/UP/10** Installation of gas appliances in industrial and commercial premises, Part 1: Flued appliances.

Filling the system

The initial filling of a sealed heating system and subsequent refilling must be by a method that has been approved by the Water Regulations Advisory Scheme (WRAS) for the type of heating system, i.e. Non Domestic (other than in-house) Fluid Category 4 (C4).

For Category 4 systems

The approved method of filling must comprise of the following components in the arrangement shown;

- Control Valve, on the Mains Cold Water pipework.
- Strainer.
- Verifiable Backflow Device with Reduced Pressure Zone (RPZ Valve) Incorporating a 'Type BA' air gap.
- Tundish
- Control Valve, on the Heating System pipework.
- Alternatively, the use of a Pisces Minifill Pressurisation Manager from ELCO UK meets all of the requirements – see appropriate literature or visit www.mhsboilers.com

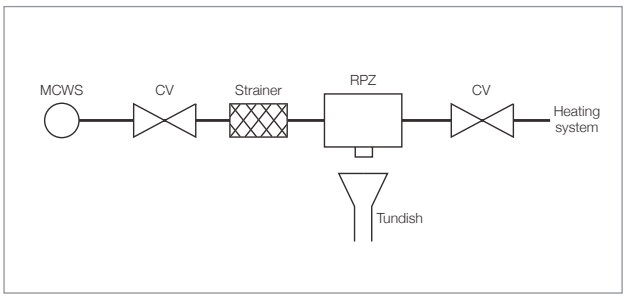

Hydraulic system design

Thison L Series Boilers are designed to operate with a nominal Δt 20°C. The water system should have minimum static head of 17m (1.7bar). The system shall be water treated in accordance with BS 7593:2006, code of practice for treatment of hot water central heating systems.

Single boiler schematic

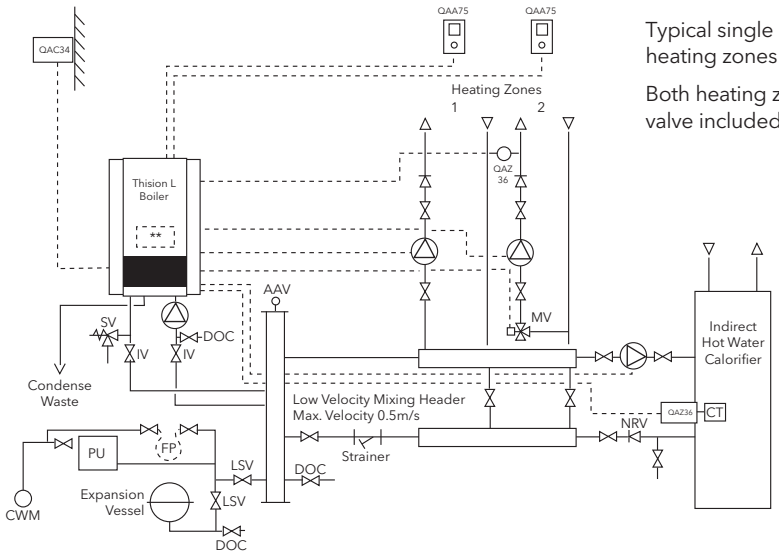

Typical single boiler installation schematic with 2 nr heating zones plus a domestic hot water cylinder.

Both heating zones may be with or without VT mixing valve included.

Legend for system schematics

*	Extension module AGU2.550 (optional extra component) installed within boiler
QAC34	Outside air temperature sensor
QAA75	Room control unit
QAZ36	Water temperature sensor for low loss header, VT heating zone and hot water cylinder
CT	Cylinder thermostat (may be used as an alternative to a QAZ36 on a hot water cylinder)
CWM	Cold water main
PU	Sealed system pressurisation unit
FP	Filling point (Refer to water regulations for acceptable method)
LSV	Lockshield valve
DOC	Drain tap
AAV	Air vent
MV	VT mixing valve
NRV	Non return valve
IV	Isolation valve
SV	Safety relief valve

Cascade schematic

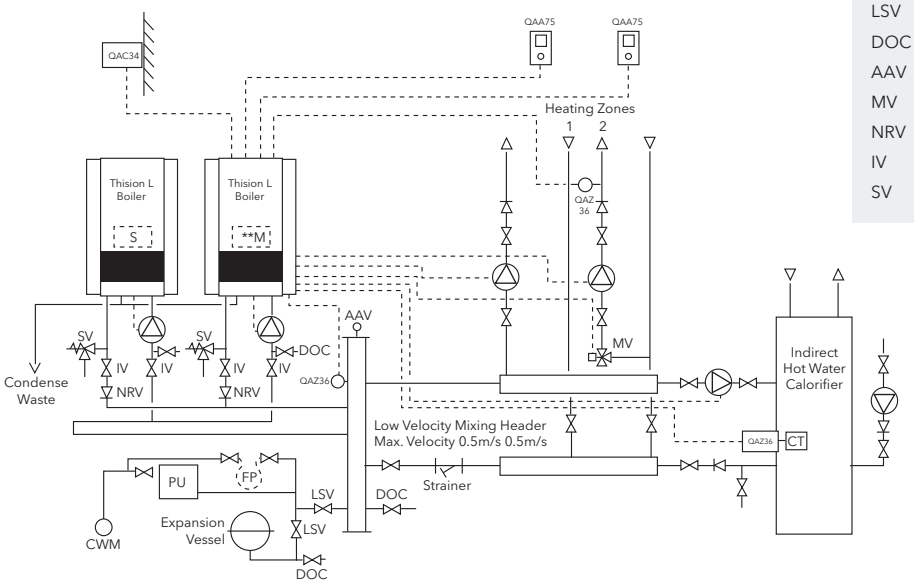

Typical cascade boiler installation schematic with 2 nr heating zones plus a domestic hot water cylinder.

Both heating zones may be with or without VT mixing valve included.

ELCO UK
3 Juniper West
Fenton Way
Southfields Business Park
Basildon
Essex SS15 6SJ
Tel: 01268 546700
Fax: 01268 888250
www.elco.co.uk

OHSAS 18001 REGISTERED FIRM
URS CERTIFICATE NO.07571

ISO 14001 REGISTERED FIRM
URS CERTIFICATE NO.07571

ISO 9001 REGISTERED FIRM
URS CERTIFICATE NO.75710

This publication is issued subject to alteration or withdrawal without notice.
The illustrations and specifications are not binding in detail. All offers and sales are subject to the Company's current terms and conditions of sale.