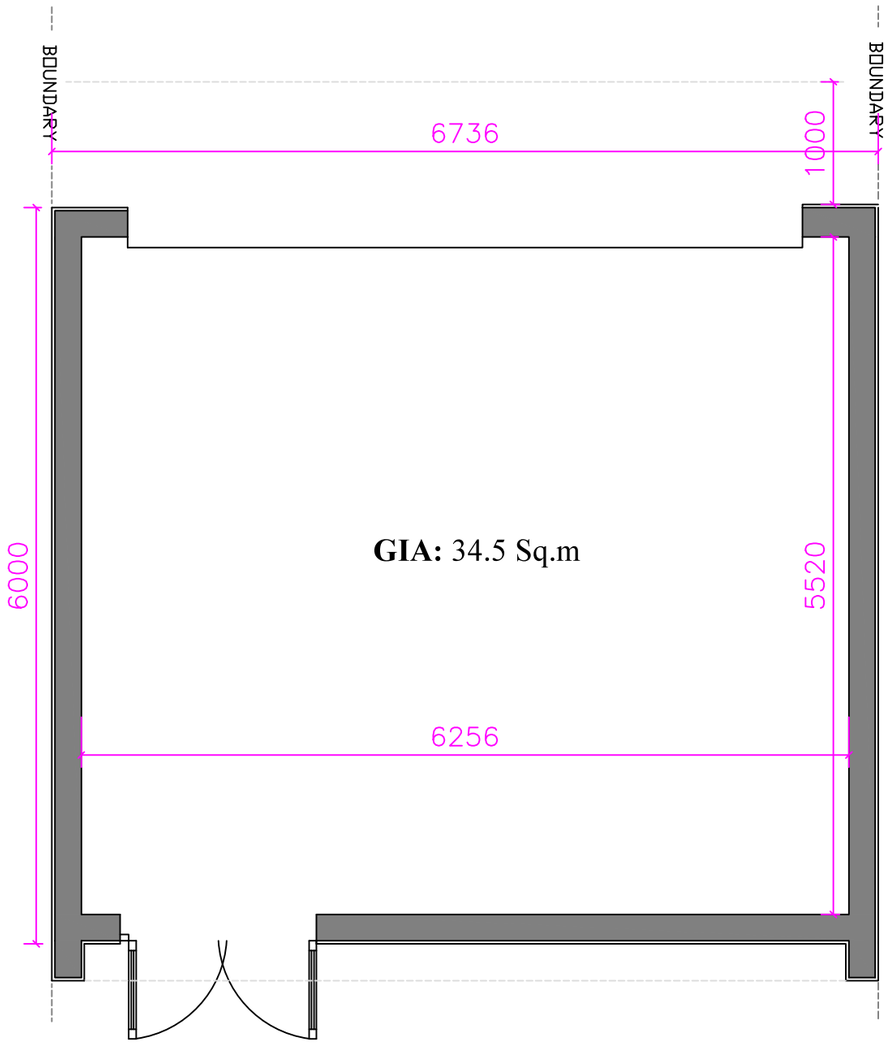

GIA: 34.5 Sq.m

PROPOSED FLOOR PLAN



LOCATION PLAN SCALE: 1:1250

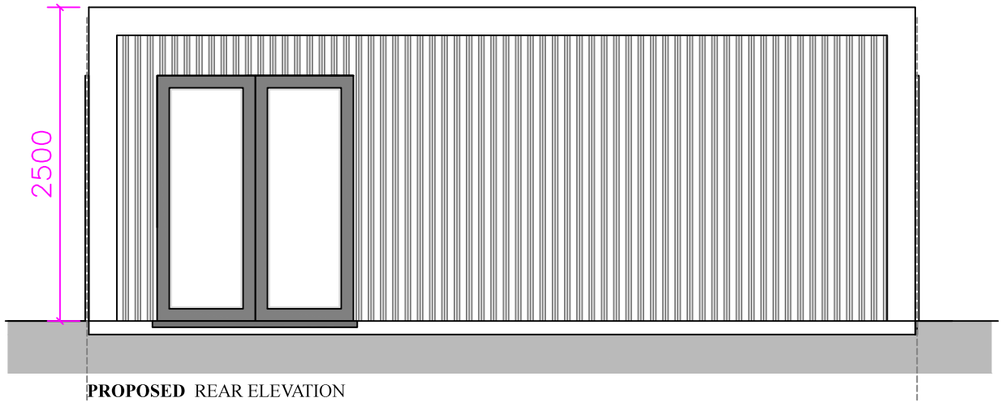

PROPOSED REAR ELEVATION

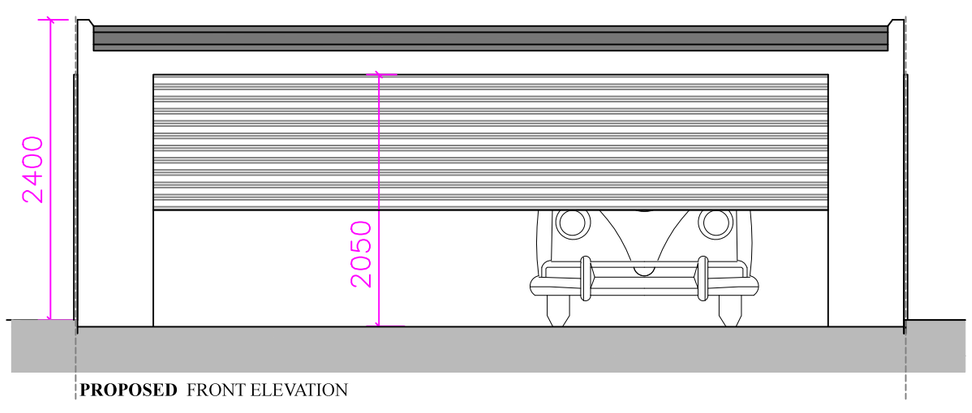

PROPOSED FRONT ELEVATION

NOTES:

[redacted]

Client
MR BATT

Job Title
50 CECIL PARK
LONDON N8 9AS

Drawing Title
CERTIFICATE
LAWFUL DEVELOPMENT

Scale
1:50 & 1:1250 @ A3

Date
FEBUARY 2016

Drawn By
SM

Drg. No
PL041-1

Rev.