

EXISTING - REAR ELEVATION
scale 1:100 @ A1



PROPOSED - REAR ELEVATION
scale 1:100 @ A1

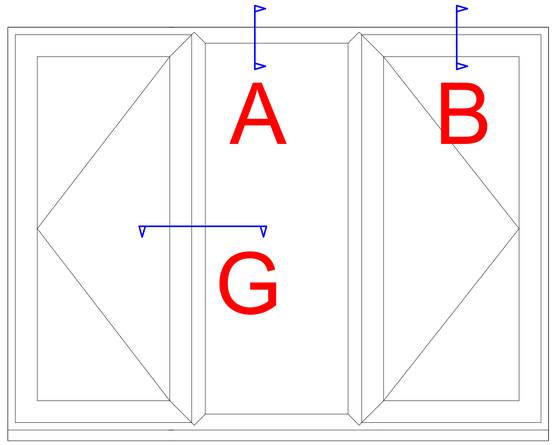

TYPICAL ELEVATION OF WINDOWS
SCALE: 1:1 @ A1

[NB: PLEASE REFER TO SCHEDULE NOTES]

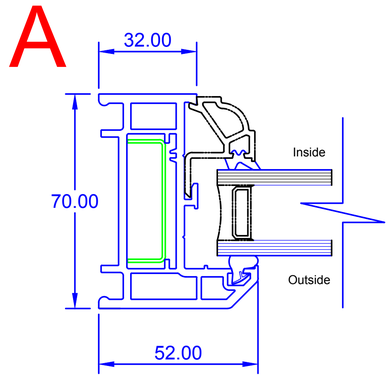

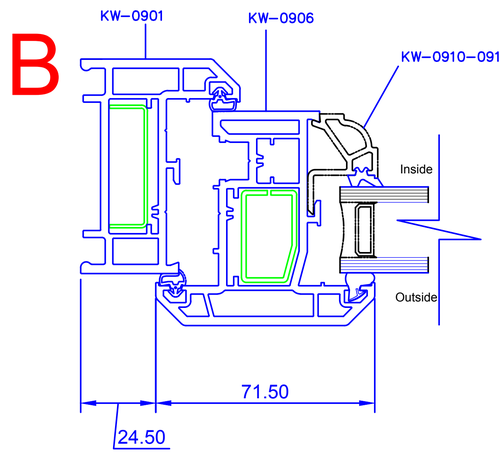

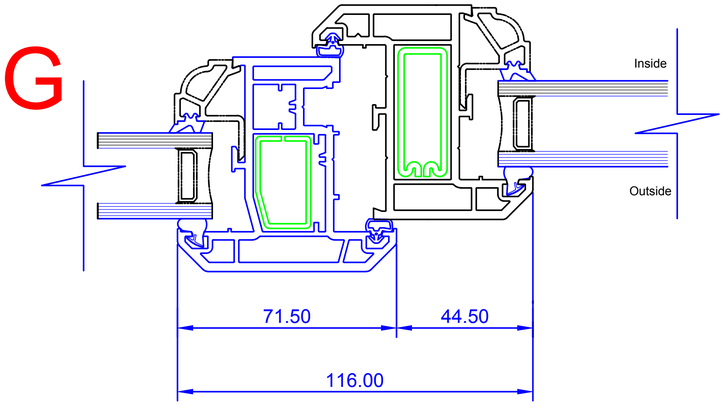

PROPOSED WINDOW

1) REARBED WINDOW-ESSENTIALS UPVC CASEMENT WINDOWS
UC16, 2380 MM. WIDE X 1195 MM. HIGH, B DIMENSION: 610, C DIMENSION: 1770, FINISH: WHITE, FRAME SIZE: STANDARD, GLASS WHOLE FRAME: 4MM CLEAR, HANDLE FINISH: WHITE, SASH FINISH: WHITE, SEALED UNIT TYPE: HEATLOK, SPACER COLOUR: BLACK, STAY TYPE: EGRESSFIRE, STYLE: FEATURED

NOTES
1. All dimensions are in millimetres(mm) & levels in meters(m) unless noted otherwise.
2. This drawing to be read in conjunction with all relevant specifications.
3. All work to comply with the relevant British Standards, GGF Codes of Practice and Building Regulations if non exempt.

PROJECT NUMBER
SO6353AT

CLIENT
MR J MCLAUGHLIN

FLAT 2
39 TALBOT ROAD, LONDON

N6 4QS

TITLE
- EXISTING ELEVATIONS
- PROPOSED ELEVATIONS
- SCHEDULE & DETAILS

DRAWN	CHECKED	DATE	SCALE
SCS	SR	27 FEB 2016	AS SHOWN @ A1

DRG. NO. 6353/PP/02 | REVISION

SCALE
0 1 2 3 m(1:50)
0 1 2 3 4 5 6 m(1:100)

1:10 (mm) 0 1000 2000 3000 4000 5000

1:1 (mm) 0 100 200 300 400 500

Fit the best Everest

EVEREST HOUSE
SOPERS ROAD
CUFFLEY
POTTERS BAR
HERTFORDSHIRE
EN6 4SG

© Crown copyright. All rights reserved. Licence number 0100042205
© Crown copyright. All rights reserved. Licence number 0100031673