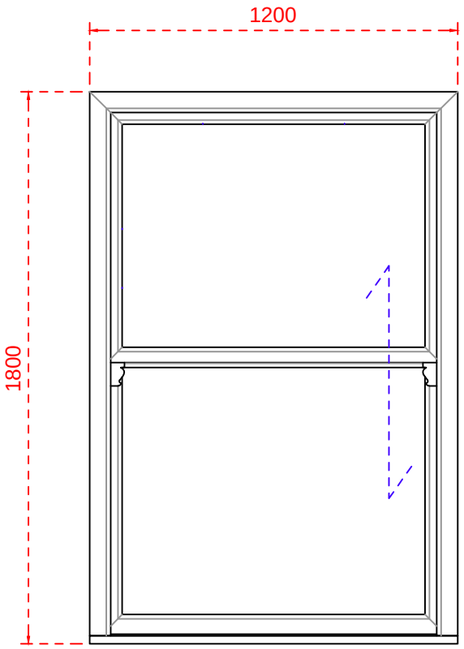

A
PVCu

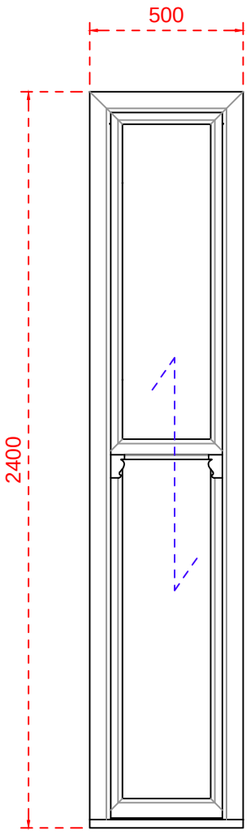

B
PVCu

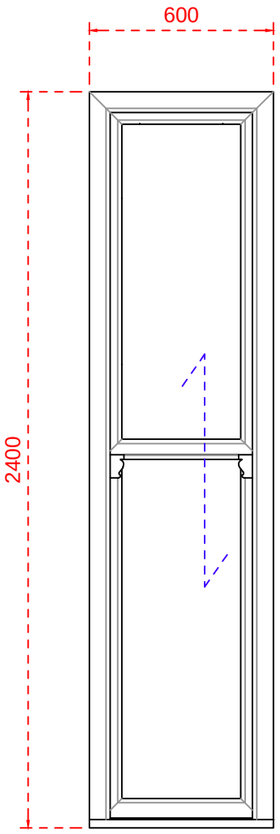

C
PVCu

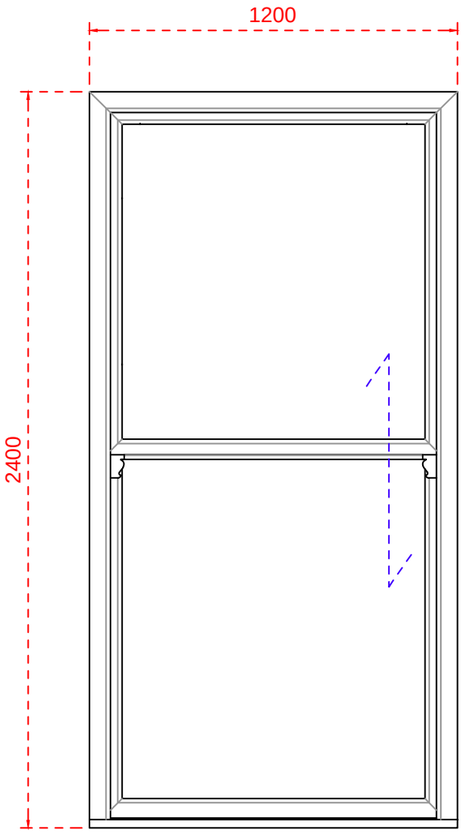

D
PVCu

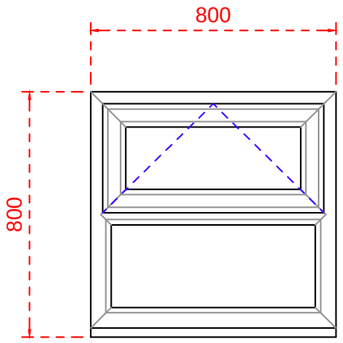

E
PVCu

General Notes

Copyright reserved. Do not scale this drawing. All dimensions to be checked on site.
Drawing errors and omissions to be reported to Ashford Commercial Ltd.

Glazing to be in accordance with current building regulations.
1st floor habitable rooms will be designed to facilitate egress hinges (design and size permitted).
All opening windows to comply with current building regulations part 'B' & part 'K'.
All windows to comply with current building regulations part 'L'.
Ventilation in accordance with building regulations part 'F' and visual impact kept to a minimum.

SITE ADDRESS:
5 & 6 Endymion Road, London

CLIENT:
Keepmoat - Year 9

TITLE:
Window Designs

PROJECT:
Homes for Haringey Scheme ST9

DRAWN BY:
Simon Hiller

REV:	DATE:	DETAILS:

SCALE: 1:20 @ A3

DATE: January 29 2016

DRAWING STATUS: PLANNING

DRAWING NO. ST9.040

REV:

Ashford COMMERCIAL
7 Folgate Road, Lyngate Industrial Estate,
North Walsham, Norfolk. NR28 0AJ
Tel: 01692 500432 Fax: 01692 500483
email: enquiries@ashfordcommercial.co.uk

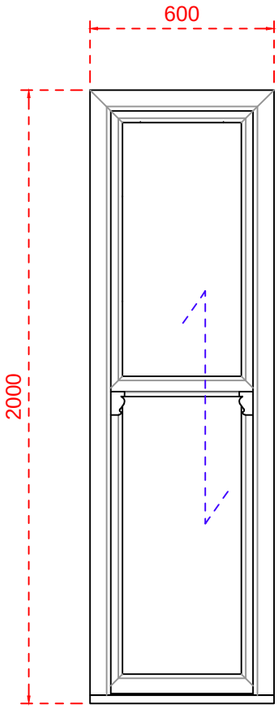

F
PVCu

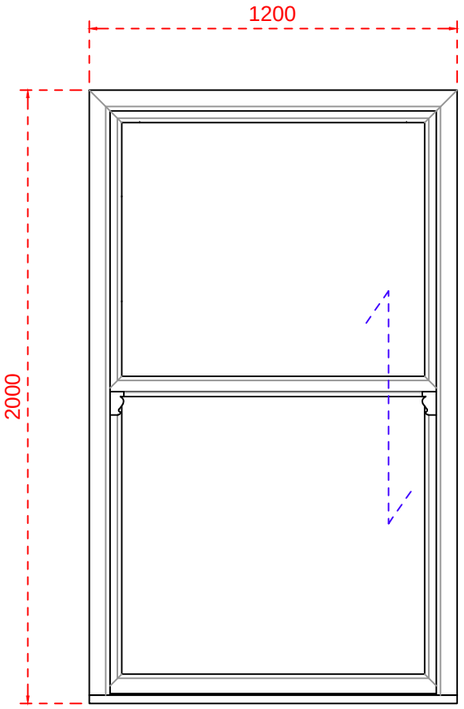

G
PVCu

H
PVCu

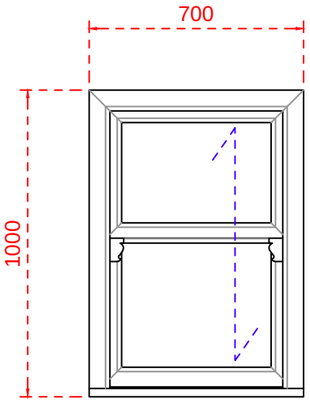

I
PVCu

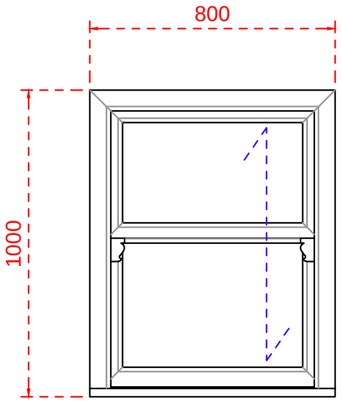

J
PVCu

General Notes

Copyright reserved. Do not scale this drawing. All dimensions to be checked on site.
Drawing errors and omissions to be reported to Ashford Commercial Ltd.

Glazing to be in accordance with current building regulations.
1st floor habitable rooms will be designed to facilitate egress hinges (design and size permitted).
All opening windows to comply with current building regulations part 'B' & part 'K'.
All windows to comply with current building regulations part 'L'.
Ventilation in accordance with building regulations part 'F' and visual impact kept to a minimum.

SITE ADDRESS:
5 & 6 Endymion Road, London

CLIENT:
Keepmoat - Year 9

REV: | DATE: | DETAILS:

SCALE: 1:20 @ A3

DATE: January 29 2016

TITLE:
Window Designs

PROJECT:
Homes for Haringey Scheme ST9

DRAWING STATUS:
PLANNING

DRAWN BY:
Simon Hiller

DRAWING NO.
ST9.041

REV:

Ashford COMMERCIAL
7 Folgate Road, Lyngate Industrial Estate,
North Walsham, Norfolk. NR28 0AJ
Tel: 01692 500432 Fax: 01692 500483
email: enquiries@ashfordcommercial.co.uk

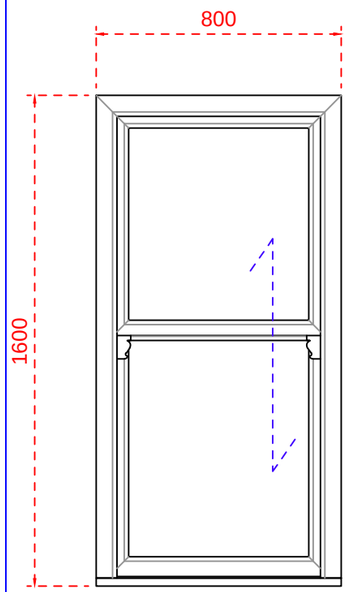

K
PVCu

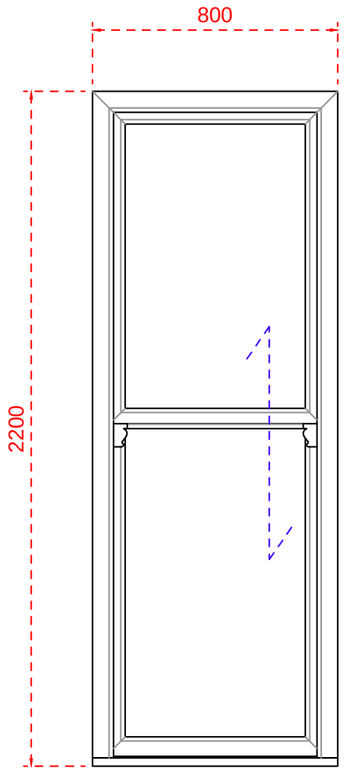

L
PVCu

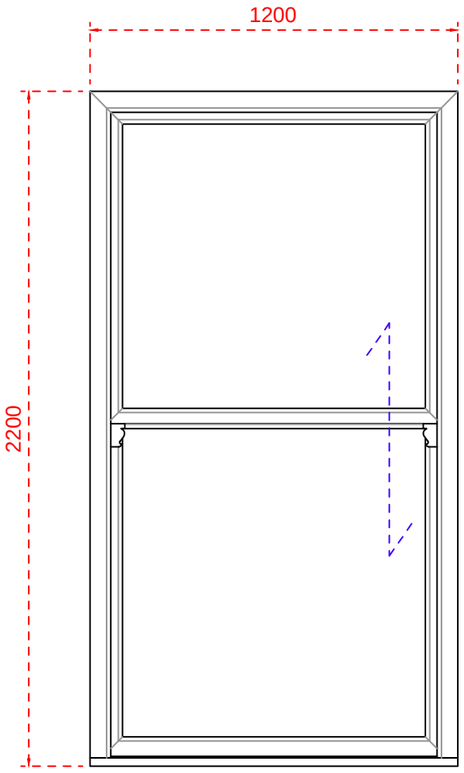

M
PVCu

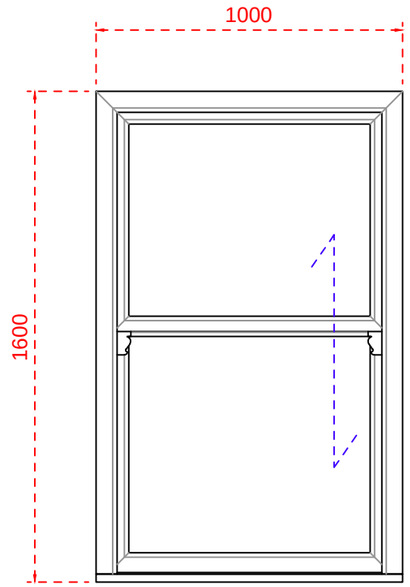

N
PVCu

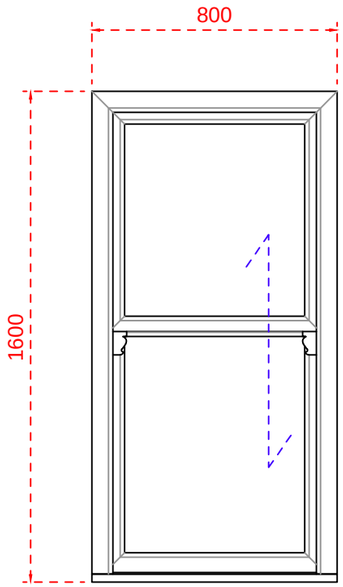

O
PVCu

General Notes

Copyright reserved. Do not scale this drawing. All dimensions to be checked on site.
Drawing errors and omissions to be reported to Ashford Commercial Ltd.

Glazing to be in accordance with current building regulations.
1st floor habitable rooms will be designed to facilitate egress hinges (design and size permitted).
All opening windows to comply with current building regulations part 'B' & part 'K'.
All windows to comply with current building regulations part 'L'.
Ventilation in accordance with building regulations part 'F' and visual impact kept to a minimum.

SITE ADDRESS:
5 & 6 Endymion Road, London

CLIENT:
Keepmoat - Year 9

TITLE:
Window Designs

PROJECT:
Homes for Haringey Scheme ST9

DRAWN BY:
Simon Hiller

REV:	DATE:	DETAILS:

SCALE: 1:20 @ A3

DATE: January 29 2016

DRAWING STATUS: PLANNING

DRAWING NO. ST9.042

REV:

Ashford COMMERCIAL
7 Folgate Road, Lyngate Industrial Estate,
North Walsham, Norfolk. NR28 0AJ
Tel: 01692 500432 Fax: 01692 500483
email: enquiries@ashfordcommercial.co.uk

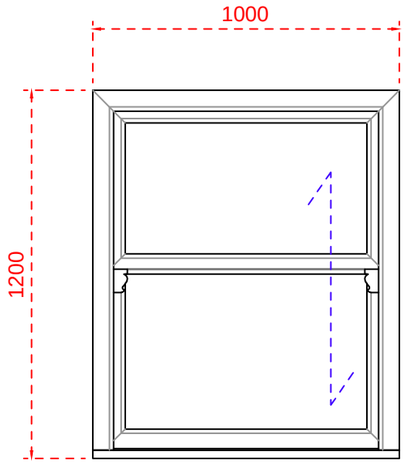

P
PVCu

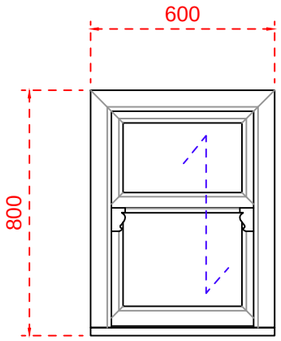

Q
PVCu

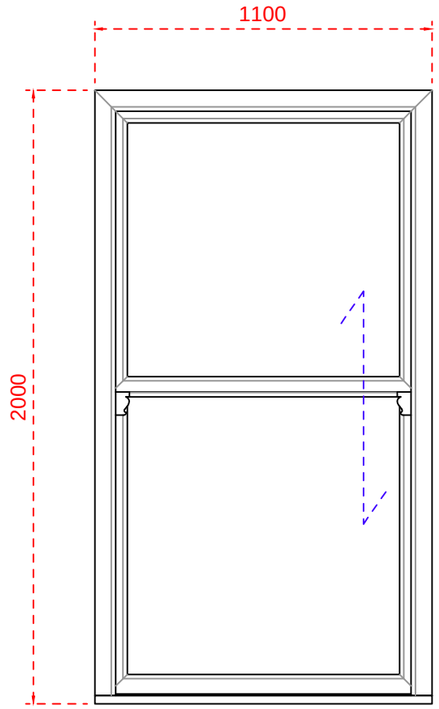

R
PVCu

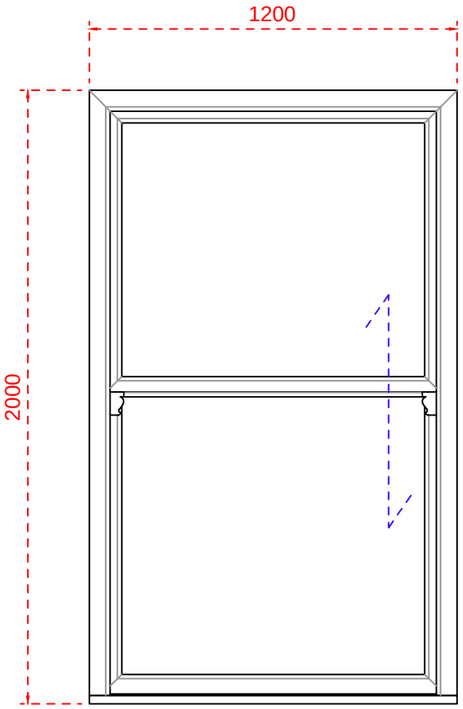

S
PVCu

General Notes

Copyright reserved. Do not scale this drawing. All dimensions to be checked on site.
Drawing errors and omissions to be reported to Ashford Commercial Ltd.

Glazing to be in accordance with current building regulations.
1st floor habitable rooms will be designed to facilitate egress hinges (design and size permitted).
All opening windows to comply with current building regulations part 'B' & part 'K'.
All windows to comply with current building regulations part 'L'.
Ventilation in accordance with building regulations part 'F' and visual impact kept to a minimum.

SITE ADDRESS:
5 & 6 Endymion Road, London

TITLE:
Window Designs

CLIENT:
Keepmoat - Year 9

PROJECT:
Homes for Haringey Scheme ST9

DRAWN BY:
Simon Hiller

REV:	DATE:	DETAILS:

SCALE: 1:20 @ A3

DATE: January 29 2016

DRAWING STATUS: PLANNING

DRAWING NO. ST9.043

REV:

Ashford COMMERCIAL
7 Folgate Road, Lyngate Industrial Estate,
North Walsham, Norfolk. NR28 0AJ
Tel: 01692 500432 Fax: 01692 500483
email: enquiries@ashfordcommercial.co.uk

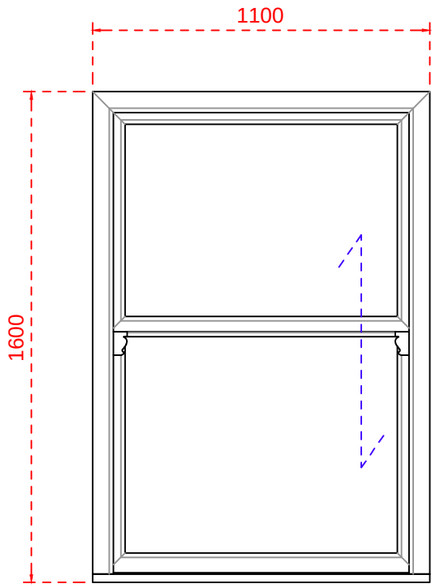

T
PVCu

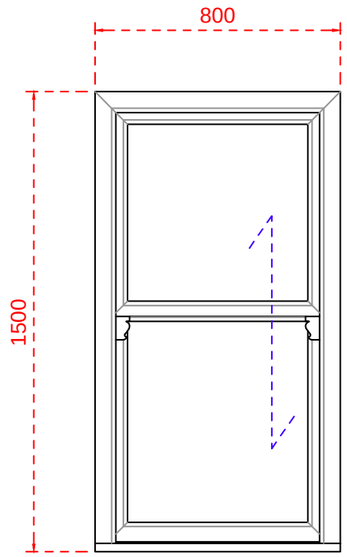

U
PVCu

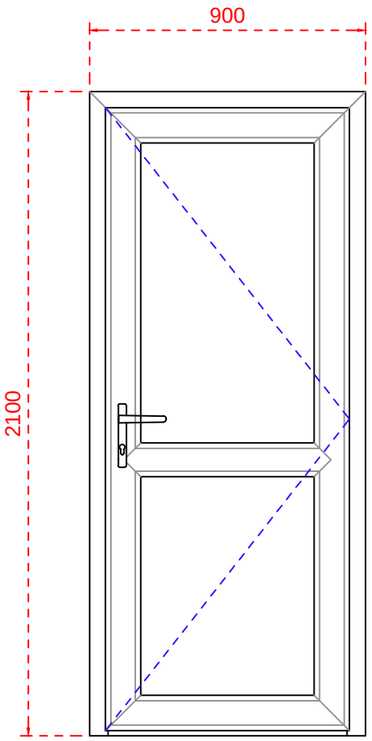

DR1
PVCu

General Notes

Copyright reserved. Do not scale this drawing. All dimensions to be checked on site.
Drawing errors and omissions to be reported to Ashford Commercial Ltd.

Glazing to be in accordance with current building regulations.
1st floor habitable rooms will be designed to facilitate egress hinges (design and size permitted).
All opening windows to comply with current building regulations part 'B' & part 'K'.
All windows to comply with current building regulations part 'L'.
Ventilation in accordance with building regulations part 'F' and visual impact kept to a minimum.

SITE ADDRESS:
5 & 6 Endymion Road, London

TITLE:
Window Designs

CLIENT:
Keepmoat - Year 9

PROJECT:
Homes for Haringey Scheme ST9

DRAWN BY:
Simon Hiller

REV:	DATE:	DETAILS:

SCALE: 1:20 @ A3

DATE: January 29 2016

DRAWING STATUS: PLANNING

DRAWING NO. ST9.044

REV:

Ashford COMMERCIAL
7 Folgate Road, Lyngate Industrial Estate,
North Walsham, Norfolk. NR28 0AJ
Tel: 01692 500432 Fax: 01692 500483
email: enquiries@ashfordcommercial.co.uk



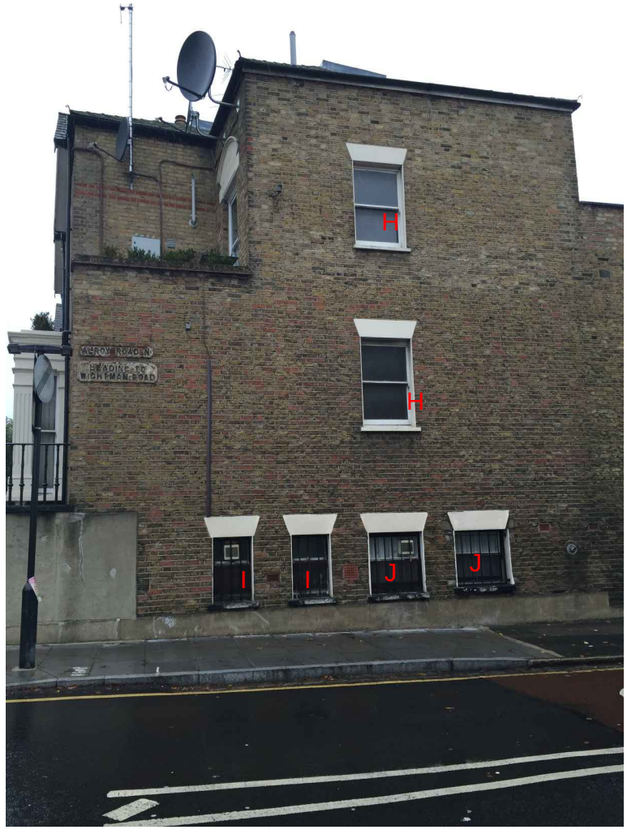



General Notes

Copyright reserved. Do not scale this drawing. All dimensions to be checked on site.
Drawing errors and omissions to be reported to Ashford Commercial Ltd.

Glazing to be in accordance with current building regulations.
1st floor habitable rooms will be designed to facilitate egress hinges (design and size permitted).
All opening windows to comply with current building regulations part 'B' & part 'K'.
All windows to comply with current building regulations part 'L'.
Ventilation in accordance with building regulations part 'F' and visual impact kept to a minimum.

SITE ADDRESS:
5 & 6 Endymion Road, London

TITLE:
Photo Elevations

CLIENT:
Keepmoat - Year 9

PROJECT:
Homes for Haringey Scheme ST9

DRAWN BY:
Simon Hiller

REV:	DATE:	DETAILS:

SCALE: NTS

DATE: January 29 2016

DRAWING STATUS: PLANNING

DRAWING NO. ST9.050

REV:

Ashford COMMERCIAL
7 Folgate Road, Lyngate Industrial Estate,
North Walsham, Norfolk. NR28 0AJ
Tel: 01692 500432 Fax: 01692 500483
email: enquiries@ashfordcommercial.co.uk