REGISTER No. **HGY/2016/2176**

Unit C Mowlem Trading Estate Leeside Road N17 0QJ

TECHNICAL DRAINAGE REPORT

With regards to the above Planning application the main changes to the existing drainage relate to the proposed new vehicle wash area. The vehicle wash area comprises a concrete base which is laid to falls to a silt trap where water from the wash bays discharges into. The silt trap captures any silt and debris from the vehicle which is collected in a perforated trough within the silt trap. This will be cleaned out periodically to ensure no blockages occur. The foul water from the silt trap then passes into an Interceptor (See attached document which gives details on the type of interceptor to be used on this scheme) The foul drain from the interceptor is then connected to the existing foul drain which runs along the Western boundary of the site.

The Existing Surface water drainage and suds which are required for this development are retained , Where existing surface finishes within the parking area a changed to suit the revised parking layout , existing gullies, Aco channels are retained in their existing positions

Internally the existing foul drains are retained and un changed as all new internal foul drains will be run above finished floor level and connected into existing SVP positions.

Pipework Type - Size and Orientation
Inlet /outlet pipe work with diameters less than 315mm will be supplied in PVCu, larger sizes are GRP.

Wash Down Separators
Conder offer a wide range of one, two and three chamber separators specifically to be installed into wash down areas such as car wash & heavy goods vehicle cleaning facilities that must be directly discharged into a foul drain, which will then receive secondary municipal treatment. Discharge to a surface water drainage system is not allowed.
Silt separators can be used as an additional item.

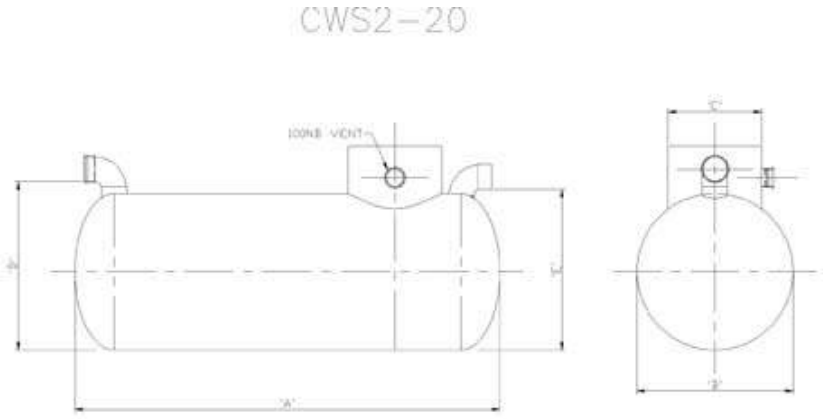

TANK CODE	CAPACITY (L)	SILT STORAGE	DIA. (mm) B	LENGTH (mm) A	ACCESS DIA. (mm) C	BASE TO INLET INVERT (mm) D	BASE TO OUTLET INVERT (mm) E
CWS2/12	2000	1000	1000	2713	600	1075	1025
CWS3/12	3000	1500	1200	2853	600	1275	1225
CWS4/12	4000	2000	1200	3737	600	1275	1225
CWS6/12	6000	3000	1500	3636	600	1550	1500
CWS8/12	8000	4000	1800	3443	600	1850	1800
CWS10/12	10000	5000	1800	4229	600	1850	1800
CWS12/12	12000	6000	1800	5015	600	1850	1800
CWS14/12	14000	7000	1800	5801	600	1850	1800
CWS16/12	16000	8000	1800	6587	600	1850	1800
CWS18/12	18000	9000	2500	4117	600	2550	2500
CWS20/12	20000	10000	2500	4524	600	2550	2500

Application Areas
Car Washes, Heavy Goods Vehicle Washes, Car Valet Centres, Farm Machinery Cleaning Points, Construction / Plant Wash down Areas.