Arboricultural Impact Assessment and Tree Protection Scheme to BS 5837:2012

1 Highgate Close, London N6 4SD

Client: Mr. A. Abrahams
Author: Daniel Simpson M.Arbor.A HND.For
Date: 17th May 2016

CONTENTS

PART 1- EXECUTIVE SUMMARY..... 3

PART 2 - GENERAL INFORMATION..... 4

PART 3 - ARBORICULTURAL IMPACT ASSESSMENT..... 7

PART 4 – TREE PROTECTION..... 9

APPENDIX I – THE AUTHOR

APPENDIX II – NOTICE FOR TREE PROTECTION BARRIERS

APPENDIX III – GROUND PROTECTION INFORMATION

APPENDIX III – TREE PROTECTION PLAN

Tree Reports Limited
26 Dunblane Drive
Leamington Spa
CV32 7TJ
Tel: 0845 36 37 180
ask@treereports.co.uk

PART 1 - EXECUTIVE SUMMARY

Tree Survey

1.1 On the 30th Aril 2016 I carried out a tree survey. I recorded two individual trees and one group of trees which are detailed in the tree survey report dated 5th May 2016.

Proposed Development

1.2 The proposal is to construct an extension of the existing house.

Arboricultural Impact Assessment

1.3 No trees are to be removed and the retained trees can be protected effectively with barriers, ground protection and arboricultural methodology for some minor root pruning. The potential arboricultural impact is low.

Tree Protection Scheme

1.4 Specifications for a tree protection are provided

Tree Reports Limited
26 Dunblane Drive
Leamington Spa
CV32 7TJ
Tel: 0845 36 37 180
ask@treereports.co.uk

PART 2 - GENERAL INFORMATION

The Author / Surveyor

2.1 My name is Daniel Simpson, details of my qualifications and experience can be found in Appendix I.

Brief From Client

2.2 To assess the impact of proposed development and provide a tree protection scheme for retained trees.

Documents Referred To

2.3 The British Standard Institute publication BS 5837:2012 'Trees in relation to design, demolition and construction - Recommendations' is referred to throughout this report. This is a nationally recognised standard typically used by Local Planning Authorities (LPAs) to assess planning applications. It is frequently referred to in planning conditions to enforce protection or control of works that may be harmful to trees both on and off the site.

2.4 This document should be read in conjunction with my tree survey report dated 5th May 2016. Other documents received from the client and others working on the project are listed below:

Plans:

- Site survey by Meridian dated 12/02/2016
- Plans and birds eye views April 2016

Limitations

2.5 This report was prepared for use by our client in accordance with the terms of the contract and for planning purposes only. It is not a substitute for a tree condition, insurance, or mortgage service. Information provided by third parties used in the preparation of this report is assumed to be correct. The contents are copyright and may not be duplicated or used by third parties without the written consent of Tree Reports Ltd.

Tree Reports Limited
26 Dunblane Drive
Leamington Spa
CV32 7TJ
Tel: 0845 36 37 180
ask@treereports.co.uk

Printing

2.6 This report is compiled into a single pdf file designed for electronic release. If printing this document, please note that the plan drawings may be a different size or orientation to the standard A4 / portrait of the rest of the report. It is necessary to print plans at the full size for scaling.

Terms and Definitions

2.7 Arboricultural Method Statement – guidelines for specified working operations near trees to avoid any harmful impact as defined within BS 5837:2012. This can cover a range of works from tree work to operating cranes, installing foundations or services and guidelines for how special engineering must perform to function as a tree protection measure.

2.8 Conservation Area – an area of land designated through planning legislation, within which no tree above 7 centimetres stem diameter (at 1.3m above ground level) can be lopped, topped or removed without following a process of notifying the LPA. There are certain notable exceptions in the cases of dead or dangerous trees.

2.9 Ground Protection – in this context the term refers to a method for preventing the ground from being disturbed, usually within the Root Protection Areas of retained trees. Other uses include protection areas to be planted. The way ground protection should be designed to perform is typically described within an Arboricultural Method Statement.

2.10 Local Planning Authority – Typically a department of the local council that manages planning and protected tree issues.

2.11 Root Protection Area (RPA) – a minimum recommended area that should not be disturbed to ensure successful retention of retained trees described in 'BS 5837:2012 Tree in Relation to Construction'. An RPA should be regarded as sacrosanct and in these areas development and construction works should be avoided where possible.

2.13 Tree Preservation Order (TPO) – a legal document that specifies certain trees for protection under the Town and Country Planning Act. It makes it necessary to make an application to the LPA to work on them (with notable exceptions). And a criminal offence to otherwise damage or destroy them.

Tree Reports Limited
26 Dunblane Drive
Leamington Spa
CV32 7TJ
Tel: 0845 36 37 180
ask@treereports.co.uk

2.14 Tree Protection Plan – as defined within BS 5837:2012. This shows (for example) the layout of the proposed development and protective measures for retained trees and trees to be removed. This is intended to be used for planning purposes and also as a reference on-site during development.

Tree Reports Limited
26 Dunblane Drive
Leamington Spa
CV32 7TJ
Tel: 0845 36 37 180
ask@treereports.co.uk

PART 3 – ARBORICULTURAL IMPACT ASSESSMENT

3.1 INTRODUCTION

3.1.1 BS 5837:2012 provides a methodology for determining the above and below ground constraints presented by trees on and adjacent to the site. These have been recorded and presented visually on the appended Tree Protection Plan.

3.1.2 Typical risks to trees during construction include collision with stems and branches and the loss of rooting area. Trees are also at risk indirectly from construction activity such as ground compaction. Where trees are to be retained it is important to ensure their retention is sustainable by reducing the scope for future problems from root and branch growth.

The Proposed Development

3.1.3 The proposal is to construct a new extension of the existing house.

3.2 OBSERVATIONS

Loss of trees

3.2.1 No trees are to be removed.

Root Protection Areas

3.2.2 The footprint of the proposed extension extends into the RPA of offsite bay laurel tree T1. The amount of incursion is less than 5% of the total RPA. The tree is not covered by a TPO but it is within the Conservation Area. The species is very tolerant of pruning and I am of the opinion that the minor root pruning required at the extremities of the RPA would not harm the long term health of the tree. I do not consider the tree to be worthy of a TPO due to its limited viewpoints from public space. Beyond the proposed extension footprint some ground protection will be needed to prevent compaction of the RPA where access will be required. A method statement will be required for the root pruning to reduce risk of infection by minimising the surface area of pruning wounds.

Tree Reports Limited
26 Dunblane Drive
Leamington Spa
CV32 7TJ
Tel: 0845 36 37 180
ask@treereports.co.uk

3.2.3 The RPAs of other trees both on and off-site are exposed and at risk from compaction via storage of materials and equipment. This can easily be remedied with the installation of a protective barrier. There will still be sufficient space on site for storage of materials and equipment and access for construction.

Tree Works

3.2.4 No aboveground tree works are required for access or to facilitate construction.

Above Ground Constraints

3.2.5 The retained trees should be protected with barriers to help prevent collision and the same layout required to protect RPAs may be used.

3.3 CONCLUSIONS

3.3.1 No trees are to be removed. The only tree works are some minor root pruning of a relatively low amenity value tree (T1). The root pruning is unlikely to harm the health and longevity of the tree. I see no reason why planning permission should not be granted subject to the implementation of tree protection measures presented in this report.

Tree Reports Limited
26 Dunblane Drive
Leamington Spa
CV32 7TJ
Tel: 0845 36 37 180
ask@treereports.co.uk

PART 4 –TREE PROTECTION SCHEME

4.1 GENERAL

Distribution

4.1.1 It is important to ensure everyone involved in the planning and design of the proposed development is aware of this report and has access to a copy as soon as it is released.

Responsibilities

4.1.2 Successful implementation of tree protection measures and long term tree retention depends on co-ordination between the project manager, site manager and other personnel involved in the development.

4.1.3 The project manager shall ensure that:

- the site manager and all other personnel are provided with this document;
- all planning conditions relating to underground works, services, trees and landscaping are cleared before development commences;
- all requirements of this Tree Protection Scheme are adhered to;
- the site manager is updated of any approved changes or variations to this document.

4.1.4 The project manager shall ensure that:

- a copy of this document with the plan in appendix V is easily accessible for site personnel to refer to before and during the time construction activity is taking place;
- all personnel working on the site are made aware of the tree protection plan and arboricultural method statements covering any activities they will undertake. This duty includes delegating the task of briefing personnel in the absence of the site manager.
- The tree protection measures remain in place until the construction phase of development is completed, except with the written consent of the LPA.
- site personnel are updated of any approved changes or variations to the approved tree protection measures.

Tree Reports Limited
26 Dunblane Drive
Leamington Spa
CV32 7TJ
Tel: 0845 36 37 180
ask@treereports.co.uk

4.1.5 All personnel must work in accordance with this document at all times, or in accordance with any subsequent approved variation.

Procedures for incidents

4.1.6 If any breach of the approved tree protection measures occurs:

- The Local Planning Authority Tree officer (or other Planning Officer) and Tree Reports Ltd shall be notified.
- The site manager must be informed immediately.
- Swift action must be taken to halt the breach and prevent any further breach.
- Damage mitigation measures appropriate to the scale of the incident will be deployed where required.

Prohibited Activities

4.1.7 The following must not be carried out under any circumstances:

- Cutting down, uprooting, damaging or otherwise destroying any retained tree.
- Lighting a fire within 10 metres of the canopy of any retained tree.
- Equipment, signage, fencing, tree protection barriers, materials, components, vehicles or structures shall not be attached to or supported by a retained tree.
- Mixing cement, chemical toilets and other use or storage of anything that would be harmful to trees shall not take place within, or close to a Root Protection Area (RPA). The distance away from the RPA must be sufficient, and the slope of the site must be such that contamination of soil in the RPA would not occur if there were spillage, seepage or displacement.
- No plant or equipment or vehicle with a hydraulic arm such as a mini digger shall be operated within striking distance of the stem and branches or the RPA of any retained tree unless otherwise specified in this report.

4.1.8 No alterations or variations shall be made to the approved tree protection measures without written approval from the LPA.

Tree Reports Limited
26 Dunblane Drive
Leamington Spa
CV32 7TJ
Tel: 0845 36 37 180
ask@treereports.co.uk

4.2 PROTECTIVE BARRIERS SPECIFICATION

Barriers

4.2.1 Barriers shall be installed and removed in accordance with the timing of operations and laid out in accordance with the appended Tree Protection Plan. The barriers must be installed before any development commences and remain in-situ until the construction phase is complete. It shall not be moved or modified in any way at any time except in accordance with this report or by written agreement with the Council

4.2.2 The appended notice should be used to create all weather notices that must be added to the tree protection barriers or suitable intervals. For this site, the existing boundary fence may be used as a tree protection barrier. In the event of any panel or support becoming damaged, this must be immediately reinforced by adding panels with the designs below as appropriate.

Tree protection barrier design

4.2.3 2 metre tall welded mesh panels standing in rubber or concrete feet joined using a minimum of two anti-tamper couplers installed so they can only be removed from inside the protected area. The fence couplers should be at spaced least 1 m apart, but uniformly across the whole barrier. These panels must be supported within the protected area with struts attached to a base plate secured by ground pins as per figure 1a. Use ground pins (e.g. due to underlying services or structural roots), the struts can be mounted on a block tray as per figure 1b.

Tree Reports Limited
26 Dunblane Drive
Leamington Spa
CV32 7TJ
Tel: 0845 36 37 180
ask@treereports.co.uk

Figure1 – above ground stabilising systems:

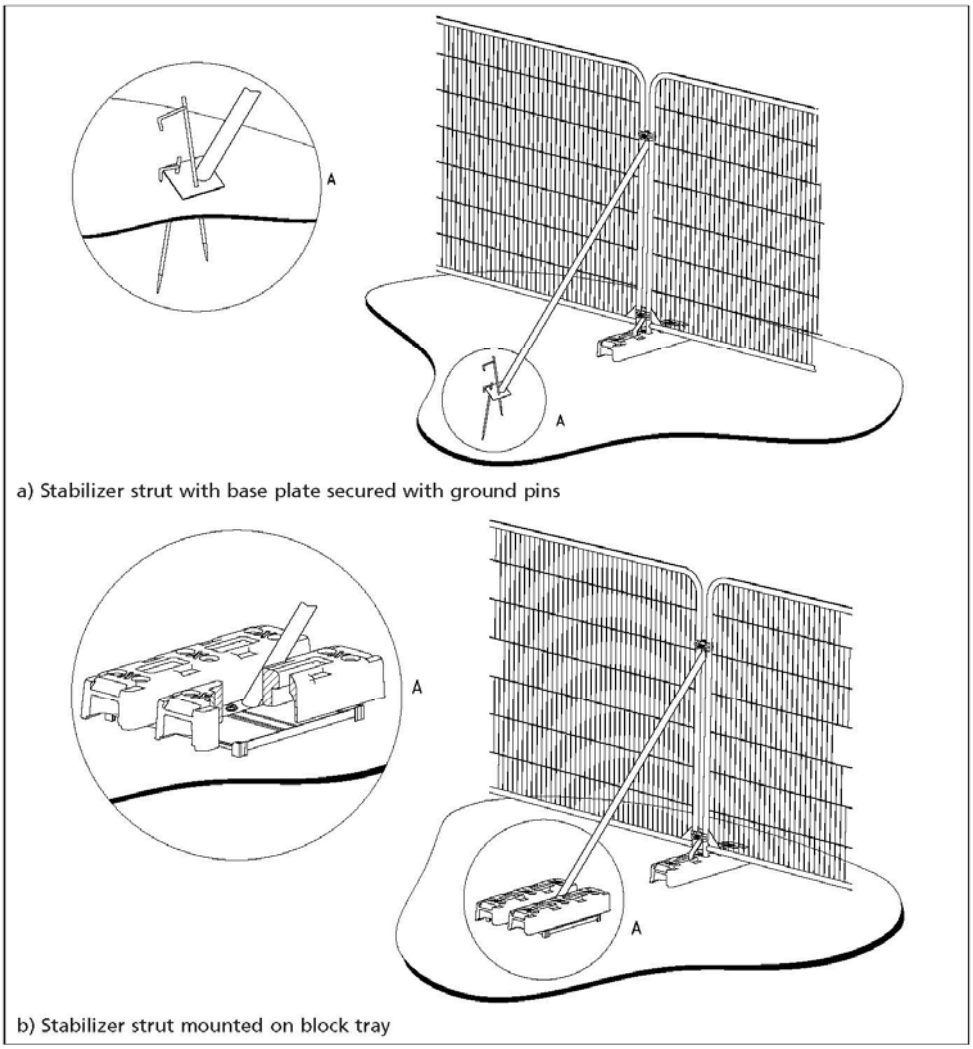

Tree Reports Limited
26 Dunblane Drive
Leamington Spa
CV32 7TJ
Tel: 0845 36 37 180
ask@treereports.co.uk

4.3 TEMPORARY GROUND PROTECTION

Specification

4.3.1 An outline design for temporary ground protection can be found below according to the required use (pedestrian only).

4.3.2 Plant and machinery must not be operated on the ground protection at any time.

Installation Method Statement

4.3.3 Ground protection shall be installed and removed in accordance with the timing of operations specified in this report. It will be laid out as indicated on the Tree Protection Plan. Ultimately, the existing soil structure in RPAs must remain undisturbed.

Tree Reports Limited
26 Dunblane Drive
Leamington Spa
CV32 7TJ
Tel: 0845 36 37 180
ask@treereports.co.uk

Temporary Ground Protection – Pedestrian Use Only

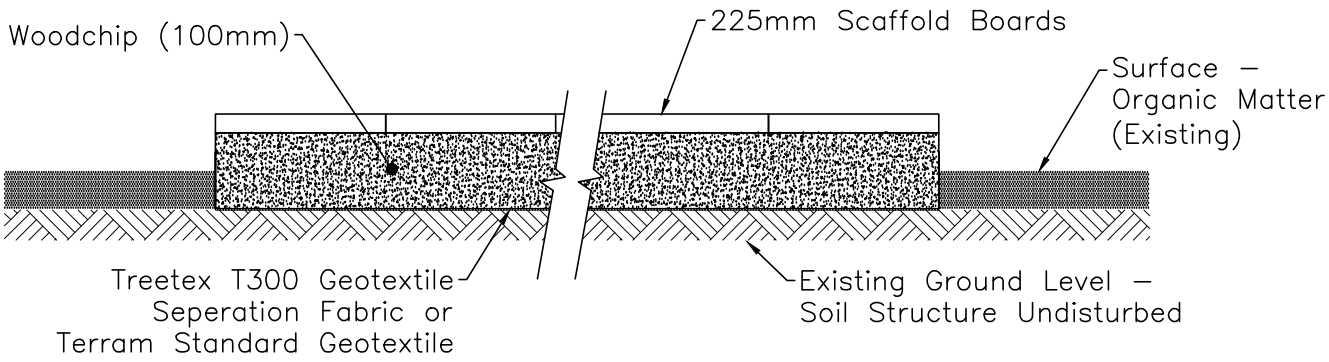

Scale 1:10

Notes

1. There must be no deviation from using the specified products/materials and alternatives to the specified products and materials may not be used without written permission from the Local Planning Authority.

2. This drawing must be read in conjunction with the approved Arboricultural Method Statement and Tree Protection Plan.

Tree Reports Ltd
Tree and Woodland Consultants

4.4 ROOT PRUNING

4.4.1 Within the RPA of T1, when excavating the digging shall be by hand tools only. Soil shall be removed gradually and carefully. Roots shall be carefully exposed and pruned back up to 10cm beyind the proposed footprint including foundation bleed as follows:

i) Root pruning shall be carried out with sharp secateurs or pruning saw. When making cuts they should be angled so as to leave a cut of the smallest diameter possible to prevent infection.

4.5 SCHEDULE OF WORKS / TIMING OF OPERATION & SUPERVSION

4.5.1 Development must be organised in the following order:

Stage	Works	Supervision required by Arborist?	Frequency
1	Install barrier and ground protection	No	N/A
2	Ground works and root pruning	No	N/A
3	Construction	No	N/A
4	Remove barrier & ground protection	No	N/A

Tree Reports Limited
26 Dunblane Drive
Leamington Spa
CV32 7TJ
Tel: 0845 36 37 180
ask@treereports.co.uk

APPENDIX I

THE AUTHOR

Brief overview of career to date

- Five years in practical arboriculture as a self-employed Climbing Arborist.
- Eighteen months - Surveyor / Consulting Arboriculturalist for a private consultancy
- Four years - Senior Tree and Landscape Officer in a Local Planning Authority.
- In 2010 I established Tree Reports Ltd and began working as an Independent Arboricultural Consultant

Qualifications

Lantra Professional Tree Inspector, Writtle College, Essex	July 2008
EDEXCEL Higher National Diploma in Forestry, National School of Forestry	Jan 2007
CIEH – Risk Assessment (Credit), Warwickshire College	June 2001
BTEC National Diploma: Arboriculture (Distinction), Warwickshire College	July 2000

Professional Memberships

Consulting Arborist Society - Professional	Since 2012
Arboriculture Association – Professional	Since 2004

Tree Reports Limited
26 Dunblane Drive
Leamington Spa
CV32 7TJ
Tel: 0845 36 37 180
ask@treereports.co.uk

APPENDIX II

NOTICE FOR TREE PROTECTION BARRIERS

Tree Reports Limited
26 Dunblane Drive
Leamington Spa
CV32 7TJ
Tel: 0845 36 37 180
ask@treereports.co.uk

TREE PROTECTION BARRIER – ACCESS PROHIBITED

DO NOT TAMPER WITH THIS BARRIER OR REMOVE IT



This area contains trees which must be retained as part of the planning permission. Additional legal protection may also apply e.g. a Tree Preservation Order. Removing or damaging trees in this area may be a breach of planning permission. Damage to protected trees may lead to a criminal conviction and / or a fine.

Only the site manager may permit for the removal or moving of tree protection measures. This should always be in accordance with the planning permission.

APPENDIX IV

TREE PROTECTION PLAN

Tree Reports Limited
26 Dunblane Drive
Leamington Spa
CV32 7TJ
Tel: 0845 36 37 180
ask@treereports.co.uk

Tree Protection Plan

KEY

- Root Protection Area (RPA)
- Tree Stem
- T1 Tree No.
- Outline of proposed development
- Area of Root Pruning
- Protective Barrier

Guide To Tree Quality Assessment Categories

- A
- B
- C
- U
- Tree Shadow
- Area of Ground Protection

This drawing has been prepared in accordance with BS 5837:2012. It is an appendix of an arboricultural report which expands on the data presented, and therefore it must not be read used without also referring to that report.

This drawing is intended to be printed and used in colour only, and for no purpose other than the consideration of trees in accordance with BS 5837.

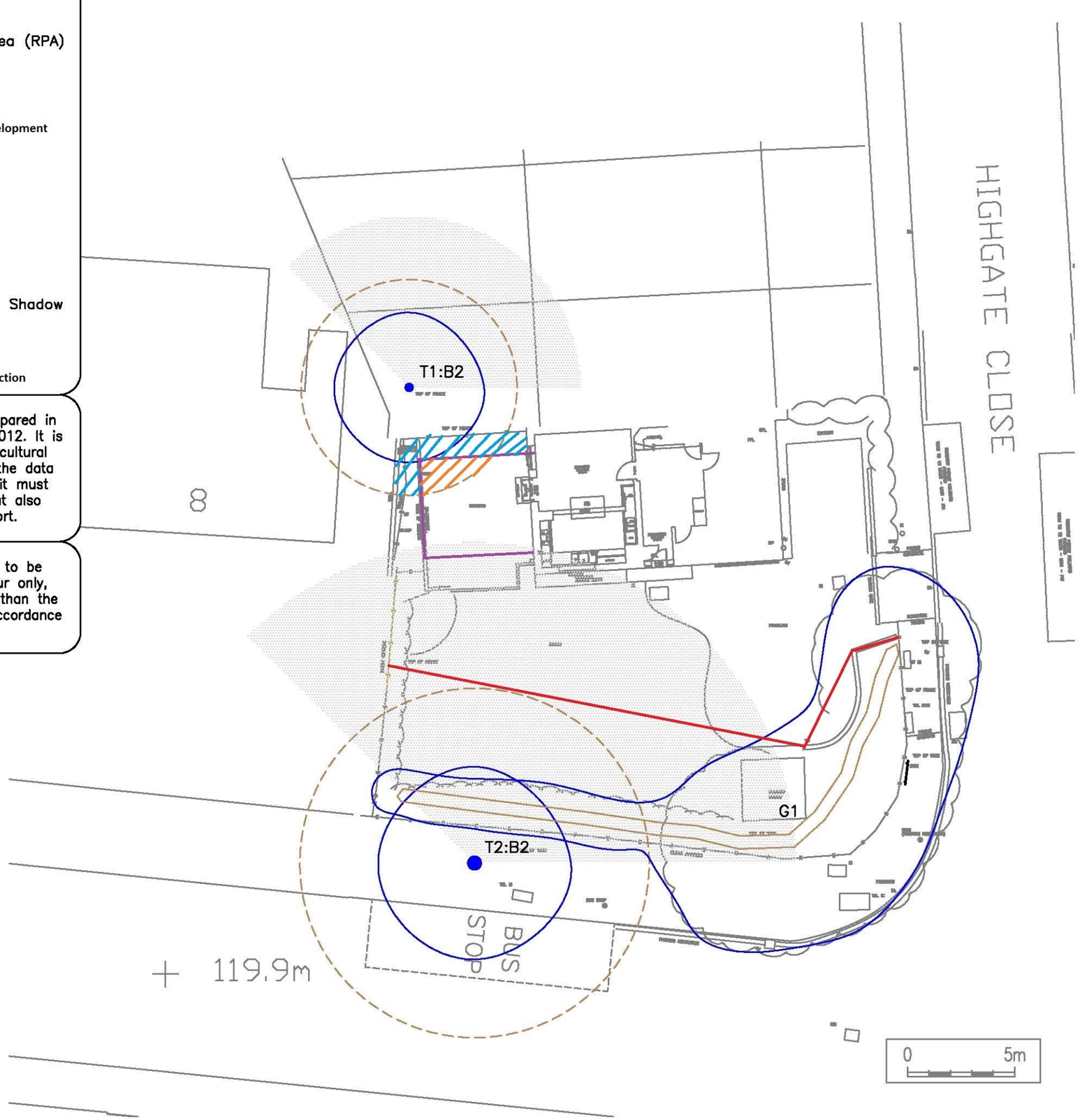

Indicative

REV.	DESCRIPTION	DWN	CHK'D	DATE

THIS DRAWING IS CONFIDENTIAL AND MUST NOT BE REPRODUCED WITHOUT THE CONSENT OF TREE REPORTS LTD.

CLIENT

Mr A. Abrahams

PROJECT

1 Highgate Close,
London N6 4SD

TITLE

Tree Protection Plan

DWN	DATE	CHK'D	DATE	APP'D	DATE	SCALE
RCK						1:200

Tree Reports Ltd.
26 Dunblane Drive,
Leamington Spa,
Warwickshire, CV32 7TJ
Telephone: 0845 36 37 180
Email: ask@treereports.co.uk

Drawing Number

A3

REV.

Tree Reports Ltd
Tree and Woodland Consultants