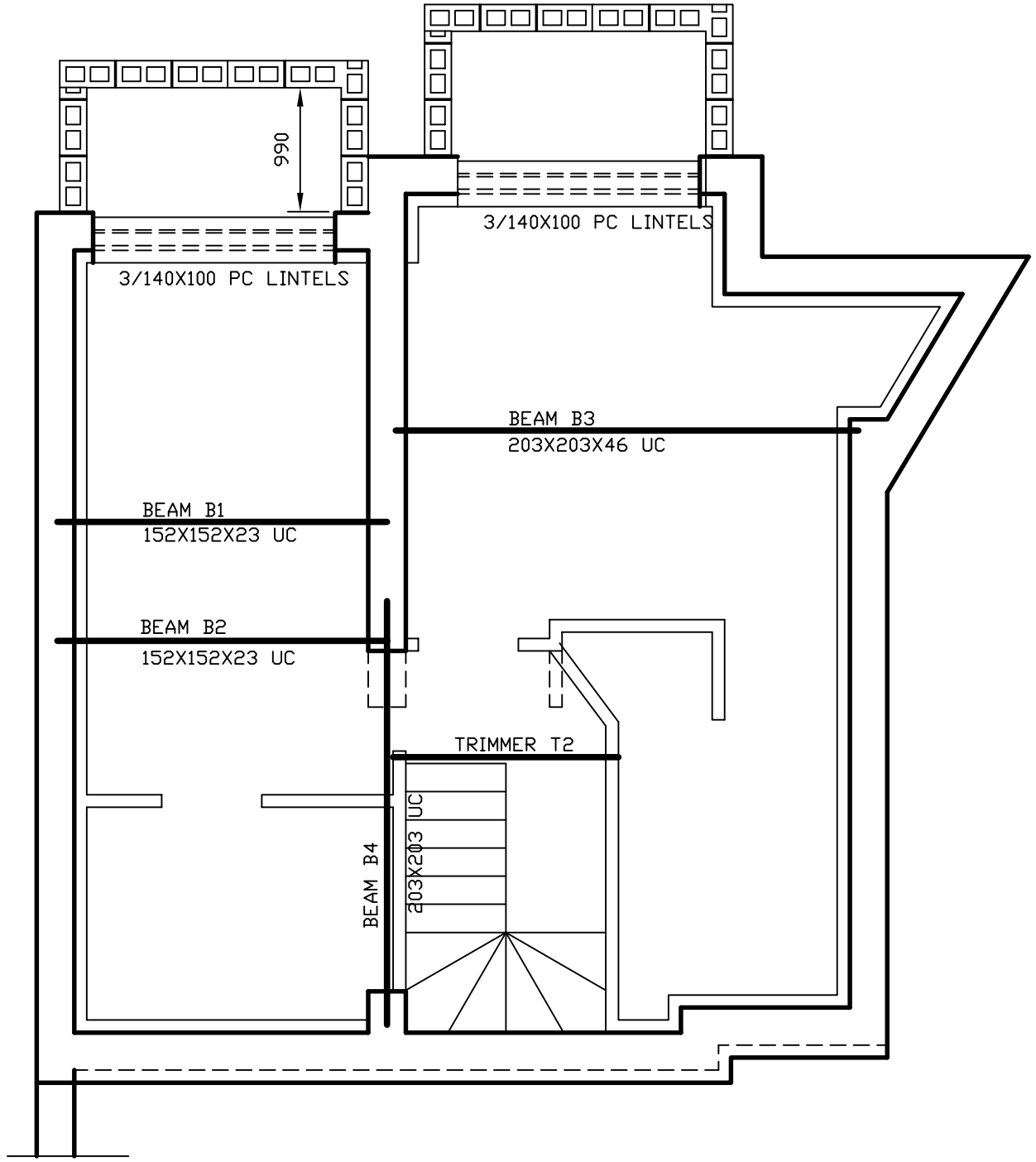

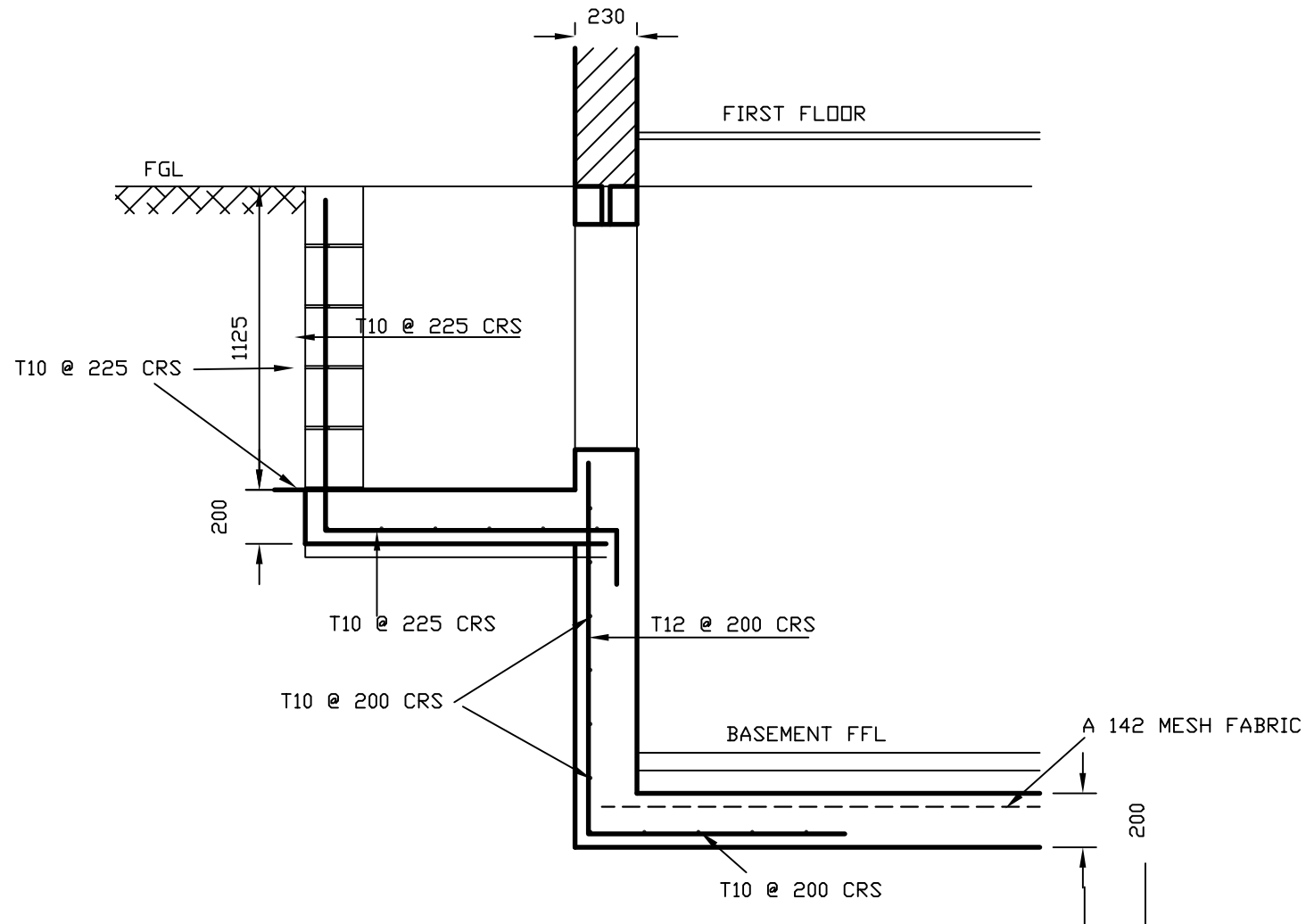

SECTION THRO' LIGHT WELL

PRELIMINARY

REF.	DETAILS	DATE
REVISIONS		

CLIENT
–

PROJECT
5A SHEPHERDS HILL
HIGHGATE
LONDON

DESCRIPTION
PROPOSED BASEMENT EXTENSION

BUILD DESIGN

5, ELMFIELD ROAD
CHELTENHAM,
GLOS GL51 9JH
TEL/FAX No. 01242 578207
EMAIL. alan@buckdesign.freeserve.co.uk

DATE	SCALE	REV
10/05/16	1:50, 1:25	B

DRAWN	CHECKED	PROJECT No.	DRG No.
ASB	–	A3	P02