the tree bureau

Arboricultural consultancy, design and management

Arboricultural method statement
for demolition, development and landscaping at Reservoir Cottage, Mount View Road London N4 4SP

Report date: 18 05 16
Report reference: AMS 7351 rev a

Arboricultural method statement

for demolition, development and landscaping at Reservoir Cottage, Mount View Road London N4 4SP

Claire Nash BA (Hons) Dip Arb (RFS) FRSPH MArborA MIoD

Client
Osman and Alice Rankin

Architect
Martyn Clarke Architecture
78 Crouch Hill, London N8 9EE
020 7263 7121
Contact: Richard Penman richard@martynclarkearchitecture.com

Project arboriculturist
The Tree Bureau
Old Warwick Studio, 2a Warwick Road
St Albans, Herts, AL1 1TW
01727 855006
Contact: Claire Nash info@thetreebureau.co.uk

Report date: 18 05 16
Report reference: AIA 7351 rev a
© The Tree Bureau 2016

CONTENTS

1	Introduction	3
2	Sequence of events	3
3	Communication, supervision and contingency	3
4	Tree work	4
5	Creation of construction exclusion zones	4
6	Parking, access, storage and administration and welfare facilities	4
7	General tree protection measures	5
8	Demolition	6
9	Waste and spoil removal	6
10	Trial pits and piling	6
11	Ground levels, ground surfaces and services	7
12	The use of a crane and scaffolding	7
13	Removal of protective measures	7
14	Landscaping and maintenance	7

APPENDIX A – Protective fencing 10
APPENDIX B – Reference 11
APPENDIX C – Scope and limitations 11

1 Introduction

1.1 This arboricultural method statement deals with the tree and soil protection measures required before, during and after development at Reservoir Cottage, Mount View Road, London N4 4SP.

1.2 It should be read in conjunction with the tree protection plan (TPP 7351 rev a, of 18 05 16) and the architectural and structural drawings, provided as separate documents.

1.3 All paragraphs in this method statement are in good faith, but are subject to final written confirmation by the local planning authority and the construction contractor when appointed.

1.4 It is most important for contractors to note that the measures specified in an arboricultural method statement and tree protection plan that have been approved by a local planning authority become legally enforceable. It is also important to note that trees on this site are legally protected and there are steep potential fines on conviction for damage to such trees.

2 Sequence of events

2.1 Pre-work site discussion about tree protection between the contractor and project arboriculturist
2.2 Tree work
2.3 Installation of protective fencing
2.4 Installation of any site facilities, such as project office, welfare provision and any necessary waste removal facilities and route
2.5 Demolition
2.6 Trial pits and ground works
2.7 Construction and fit out
2.8 Removal of protective fencing
2.9 Landscaping.

3 Communication, supervision and contingency

3.1 A site meeting or/and discussion will take place before any work starts between (at least) the project arboriculturist and the construction manager to discuss tree and soil protection.

3.2 The construction manager will ensure that all contractors, sub-contractors and site operatives are aware of the importance of tree, soil and wildlife protection measures and the requirement to follow the arboricultural method statement to avoid stop notices, enforcement and other legal action.

3.3 A copy of this arboricultural method statement (AMS 7351 rev a) and the tree protection plan (TPP 7351 rev a) will be available on the site throughout demolition, construction and landscaping, and the relevant site manager at each stage of work will be responsible for ensuring that operatives adhere to the methods.

Arboricultural supervision and monitoring

3.4 The project arboriculturist will visit the site at/during the following periods:

- before construction starts to check the installed tree protection measures

- for one unannounced visit
- at any time when the construction manager requests on-site arboricultural advice.

3.5 The construction manager will monitor the tree protection measures each day to ensure that they conform to the arboricultural method statement, and will liaise with the project arboriculturist with any queries or comments, as necessary. Records of the checks will be kept in the site log and retained for inspection.

Contingency

3.6 The construction manager will inform the project arboriculturist of any proposed changes to site logistics, methods, materials or other matters that were not initially foreseen. Adequate time will be allowed to ensure that adequate and suitable consideration can be given to tree and soil protection and any necessary permission and measures can be put in place.

3.7 If the need for any unforeseen change to this method statement should arise unexpectedly, or further specialist arboricultural advice is required, the site manager will contact the project arboriculturist immediately and work will be stopped until decisions have been made. The arboriculturist will assess the situation and make recommendations, liaising with the local planning authority's tree officer where necessary.

4 Tree work

4.1 Before any other work takes place on the site, the following tree work will be carried out by a qualified, competent, insured tree surgeon, working to the recommendations of the British Standard BS3998:2010 *Tree work – Recommendations*, including wildlife and habitat protection and biosecurity measures:

4.1.1 remove the trees/shrubs T1, T2, T3, T4 and T5 grind out their roots to about 300mm below ground level

4.1.2 crown lift and cut back the northern branches of the tree T6 by up to 0.6m to improve construction access and lightly prune to balance crown, favouring fruit production, all work to be the minimum to achieve objectives

4.1.3 coppice the gum tree T7 (and maintain it by a regular cycle of coppicing thereafter, to encourage the production of juvenile leaves).

4.2 The tree surgeons will take care to ensure that they do not place or use heavy equipment within the construction exclusion zones shown on the tree protection plan TPP 7351 rev a.

4.3 Small and medium branches will be chipped and the wood chip will be stored on site at a location to be agreed between the tree surgeons, owners and project arboriculturist for later use as a mulch around the new trees to be planted.

5 Creation of construction exclusion zones

Construction exclusion zones

5.1 Before *any other* work on site begins, construction exclusion zones will be formed by protective fencing set out according to the tree protection plan (TPP 7351 rev a).

5.2 The fencing will consist of sections of at least 1.8m-high, steel mesh panels (such as Heras panels) that are wired to a framework of steel scaffold poles. All the fencing will be braced/stabilized, as

described in section 6.2.2 and shown in Figure 2 of the British Standard BS5837: 2012 *Trees in Relation to Design, Demolition and Construction – Recommendations*. Figure 2 is shown in Appendix A of this report. The panels will be securely fastened one to another to prevent them from being opened like gates.

5.3 All-weather notices will be attached to all the barriers, with words to the effect: 'Tree protection. Legally enforceable construction exclusion zone — keep out.'

5.4 There will be no parking, construction access or activity within the construction exclusion zones. No work will be undertaken within any construction exclusion zone, and no equipment, machinery, plant, materials or spoil will be stored there.

5.5 The construction manager will be responsible for ensuring that the fencing remains fit for purpose and is secured to prevent access.

5.6 The fencing around construction exclusion zones will not be removed until the project arboriculturist has given permission for its removal.

6 Parking, access, storage, administration and welfare facilities

6.1 Site access for personnel, materials, components and equipment will be from Mount View Road.

6.2 The position of contractor parking areas, the site administration office, the personal welfare facilities and materials storage areas will be outside the construction exclusion zones.

7 General tree protection measures

7.1 If work reveals either individual roots with a diameter of 25mm or more, or clumps of smaller roots, work will stop, the roots will be protected as described in paragraph 7.3 and the arboriculturist's advice will be sought. No individual roots larger than 25mm diameter, or clumps of smaller roots, will be pruned without first obtaining the arboriculturist's advice, as to do so could compromise the health or stability, or both, of a tree.

7.2 If work reveals a few individual roots below 25mm diameter, it is permissible for a competent person to cut them cleanly, using a sharp saw or sharp secateurs. The cut should ideally be to a side branching root.

7.3 Individual roots and groups of roots will not be left exposed, but will immediately be wrapped in clean hessian, or similar, (ideally, as if bandaged) to protect them from desiccation, exposure to wind or sudden temperature changes. The hessian will be removed before any backfilling. Where any temporary backfill is required, it will consist of consolidated, but not compacted, *sharp* sand (not builder's sand, which has a salt content that is harmful to trees) or good quality topsoil.

7.4 Extreme care will be taken when mixing materials to avoid spilling them or enabling them to be washed down slopes to tree roots. Material that could contaminate the soil, such as concrete mixings, oil or diesel, will not be discharged within 10m of a tree trunk.

7.5 Fuels will not be transferred within 5m of the protective fencing.

7.6 Fires will not be lit on the site.

7.7 There will be provision for adequate and appropriate supervision of construction work to protect trees from immediate, long-term, direct or indirect harm.

8 Demolition

8.1 All demolition and dismantling will be carried out with care to avoid damage to off-site trees and rooting areas. If necessary, debris netting will be installed parallel to Mount View Road before demolition starts. This will be decided during the preliminary pre-work meeting between the site manager and project arboriculturist.

8.2 Work will be undertaken with care to avoid any flying debris that could damage trees.

8.3 If dust caused by demolition is visible on the trunk, branches or leaves (if present) of the retained trees on or off site, they will be rinsed with clean water running at *low* pressure from a hose. As trees are living organisms, the site manager will be responsible for ensuring that the trees are not 'jet-washed' and are not rinsed in freezing temperatures.

9 Waste and spoil removal

9.1 Waste and spoil will be removed promptly from the site and will *not* be piled or stored within any construction exclusion zone, or anywhere else on site where it changes soil/ground levels within root protection areas.

9.2 Skips, if used, will be placed outside the construction exclusion zones. Their delivery, collection, lifting, lowering or manoeuvring will be supervised by a banksperson to prevent damage to trees on or adjoining the site.

10 Trial pits and piling

10.1 Note: the intention is to retain the existing foundations and slab of the north-western section of the existing building and to cantilever the slab from piles set back from the north-eastern section of the proposed building. Anti-heave measures will be incorporated.

10.2 Before any piling takes place, two sections of ground parallel to Mount View Road will be dug by hand or by using hand-held tools and equipment only (such as a compressed air lance) to a target depth of 1.6m to assess the presence, or otherwise, of tree roots. The areas to be dug are marked on the tree protection plan TPP 7351 rev a.

10.3 If any roots are uncovered anywhere on site, paragraphs 7.1 to 7.4 inclusive will be followed until decisions can be made by the architect, structural engineer, project arboriculturist and site manager. The principal will be to retain roots undamaged and to adjust the position of piles as necessary and to cantilever the slab as appropriate. The position and size of any uncovered roots will be plotted on a drawing to facilitate the positioning of the piles.

10.4 The structural and geotechnical engineers will determine the type, depth and position of piles, taking account of the position of any roots and subsidence/heave precautions.

10.5 The piling rig will be the smallest practicable and will be positioned outside any construction exclusion zone. The piling rig's boom will be lowered when moving between piling operations to avoid accidental damage to any tree. A banksperson will be engaged to prevent impact or entanglement with retained trees.

11 Ground levels, ground surfaces and services

11.1 Other than for the foundations and light well, no soil or ground surface will be excavated, stripped, dug or disturbed, and there will be no regrading of soil levels within root protection areas.

11.2 The site manager will ensure that paragraphs 7.2 to 7.4 inclusive are observed.

11.3 Services will be connected from the existing services, and there will be no new service trenches.

12 The use of a crane and scaffolding

11.1 It is not anticipated that a crane will be used. If this changes, the site manager will inform the project arboriculturist in good time to allow for consultation, including with the local planning authority's tree officer if appropriate

11.2 If any scaffolding is required, it will be supported on a ground plate, and care will be taken to ensure that poles do not snag trees during installation.

13 Removal of protective measures

12.1 All tree protection measures will stay in place until the project arboriculturist has approved their removal. The granting of the permission to remove the protection will be recorded in the site log.

14 Landscaping and maintenance

14.1 The project arboriculturist or landscaper will assess the soil and specify soil improvement where necessary.

14.2 The following trees/shrubs/climbers will be planted as replacements for the removed plants:

Number	Species	Form/size
4	*Taxus baccata* 'Fastigiata'	min 1-1.2m/Clt.18
4	*Ligustrum licidum* 'Variegata'	min 12-14cm/Clt65
2	*Ligustrum licidum* 'Variegata' or *L. japonicum* 'Excelsum Superbum'	ball 1.25-1.5/Clt18
5	*Acer japonicum* cv	clients' own, about 30mm dia/1.5 high
1	*Amelanchier alnifolia* 'Obelisk'	feathered/Clt30
1	*Magnolia x loebneri* 'Leonard Messel'	feathered, min 1.5-1.75/Clt30
1	*Prunus maackii* 'Amber Beauty'	min 12-14cm
1	*Malus* cv	cordon or step-over
2	*Lonicera fragrantissima*	min Clt10
3	*Cornus sanguinea* 'Midwinter Fire'	min Clt10
4	*Clematis armandii*	min Clt10
2	*Lonicera periclymenum*	min Clt10

14.3 The position of the new plants is shown on the tree planting plan LAND 7351 rev a.

14.4 The trees and shrubs will be containerised (grown in a container for at least a season after lifting), ideally in a light pot or air pot, and will have well-established radial root growth in the container, without any circling or girdling roots and with a significant amount of fibrous roots.

14.5 The trees will be of the size specified, true to type and free from discernible pests and diseases. Where formative pruning has been carried out, the wounds will have healthy and continuous bark occlusions.

14.6 In the case of any doubt, the recommendations of BS8545 2014 *Trees: from nursery to independence in the landscape – Recommendations* will be followed.

14.7 Square planting pits will be dug by hand to a diameter of at least 500mm greater than that of the diameter of the root ball. The pit will be deep enough to facilitate the depth of the root ball up to the root-collar, but no deeper than required by clause 14.8.

14.8 The trees and shrubs will be planted to the depth of the root-collar only, level with the top of the finished level of the surrounding soil. (If in doubt about the planting depth, consult the project arboriculturist for advice because unduly deep planting is a common cause of poor tree health and structural problems.)

14.9 The pit will be **back-filled with the excavated soil (after stones and any other sharp materials have been removed) and no additional material will be added**. Backfilling will be carried out in stages so that the soil can be lightly consolidated in layers of about 150mm to ensure that no air pockets are left around the root ball, but without compacting the soil to a high bulk density.

14.10 If trees have been grown in air-pots or light pots, no staking may be necessary. Otherwise, the trees will be secured in place by double stakes of pressure-treated, peeled timber, and tied with a biodegradable tie at a height of no more than one third the height of the clear stem of the tree, as shown in the illustration in Appendix A of BS4043:1989 *Recommendations for transplanting root-balled trees*.

14.11 After planting, each tree and shrub will be watered slowly under low pressure until the soil immediately around the trunk and an area equivalent to a circle with a diameter of at least 1000mm around the stem is thoroughly moistened (ie. to 'field capacity').

14.12 An area equivalent to a circle with a diameter of at least 1000mm around each tree will be mulched with bark, wood chip or well-composted garden/kitchen waste laid directly on the soil to a depth of between 80mm and 100mm. The mulch will not be in direct contact with the trunk, which can lead to disease. (See section 6.2 of the British Standard BS3998:2010 *Tree work – Recommendations*.) Ideally, shrubs will be mulched in a similar manner.

14.13 The mulch will be topped up every few years in mild weather in spring or autumn, when the soil is moist and not frozen, to ensure that the total specified coverage and depth is maintained but taking care to ensure that anaerobic layers are not inadvertently created. If in doubt, allow the mulch levels to drop a little first.

14.14 There will be no mechanical cultivation under the crown spread of a tree. Any work will be carried out by hand only and care paid not to damage roots.

14.15 Soil will not be stripped, excavated or regraded around retained trees. The finished soil levels around the new tree will conform to paragraph 14.8.

14.16 Stakes and ties, if used, will be removed within 18 months.

APPENDIX A – PROTECTIVE FENCING

Figure 2 **Default specification for protective barrier**

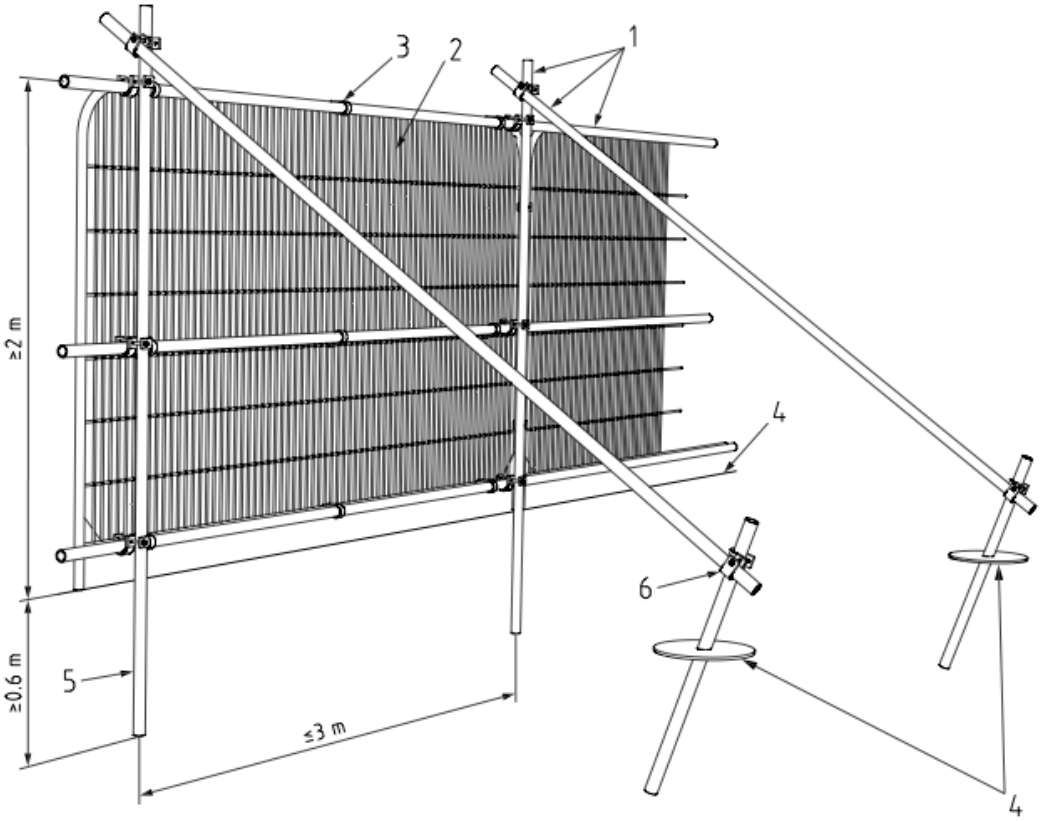

Key

1 Standard scaffold poles
2 Heavy gauge 2 m tall galvanized tube and welded mesh infill panels
3 Panels secured to uprights and cross-members with wire ties
4 Ground level
5 Uprights driven into the ground until secure (minimum depth 0.6 m)
6 Standard scaffold clamps

From BS5837:2012 *Trees in Relation to Design, Demolition and Construction – Recommendations*, with permission

APPENDIX B – REFERENCE

British Standard BS3998:2010 *Tree work – Recommendations*; British Standards Institution, 2010.

British Standard BS5837: 2012 *Trees in Relation to Design, Demolition and Construction – Recommendations;* British Standards Institution, 2012.

BS8545 2014 *Trees: from nursery to independence in the landscape – Recommendations;* British Standards Institution, 2014.

APPENDIX C – SCOPE AND LIMITATIONS

1 This report and its associated tree protection plan are based on arboricultural criteria only. Comments and drawings relating to non-arboricultural matters must be viewed as provisional and referred to appropriate specialists for confirmation and specification.

2 The tree protection plan (drawing TPP 7351 rev a) is based on drawings by Martyn Clarke Architecture.



the tree bureau

Old Warwick Studio
2a Warwick Road
St Albans Herts AL1 4DL
01727 855006