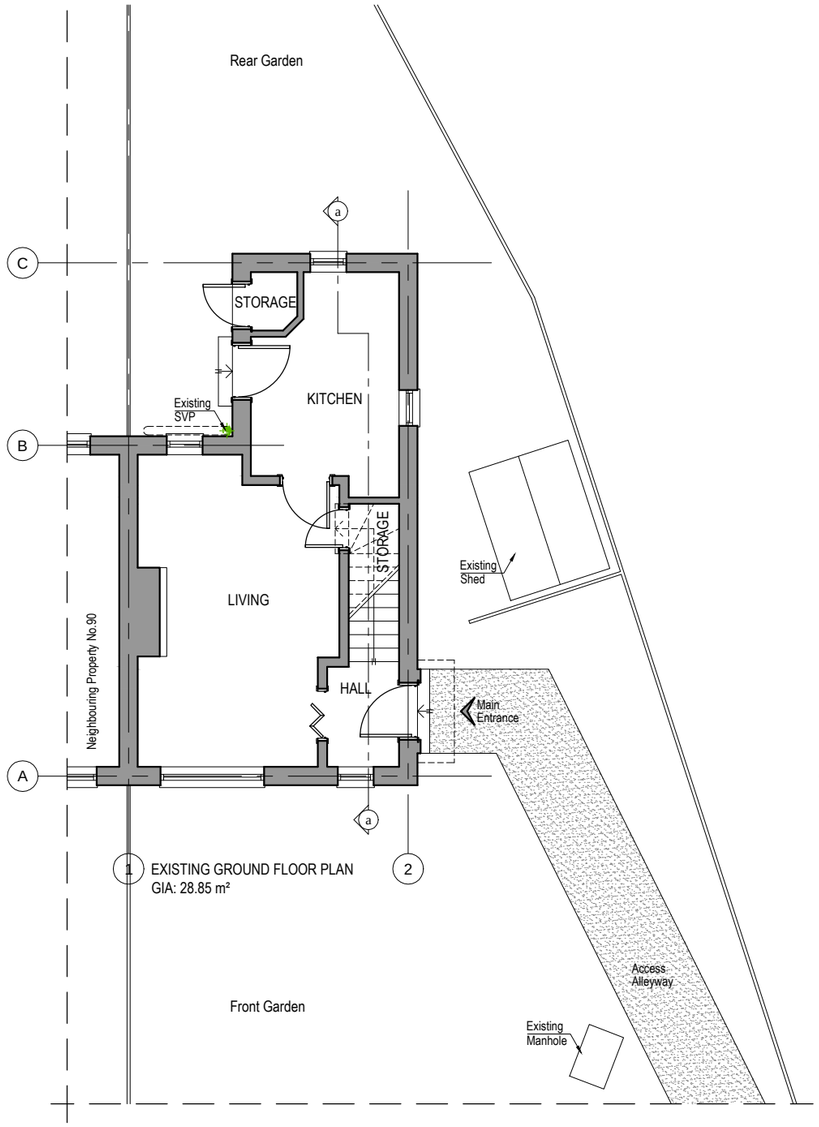

1 EXISTING GROUND FLOOR PLAN
GIA: 28.85 m²

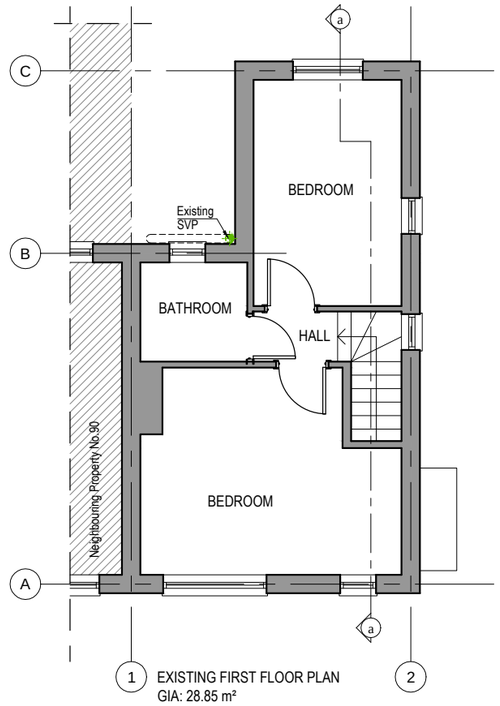

1 EXISTING FIRST FLOOR PLAN
GIA: 28.85 m²

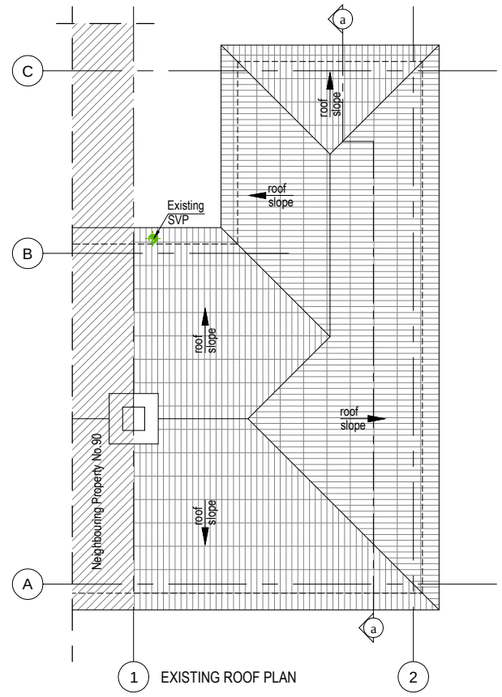

1 EXISTING ROOF PLAN

0 1 2 3 4 6m
scale 1:100

WALLS / CEILINGS LEGEND:
EXISTING WALLS / CEILINGS
PROPOSED WALLS / CEILINGS
WALLS / PARTITION TO BE REMOVED

LINES / HATCHES LEGEND:
REMOVING INTERVENTIONS
PROPOSED INTERVENTIONS
NEIGHBORING PROPERTIES

NOTE:
THE PROPOSED FINISHES TO MATCH WITH THE EXISTING

Notes
1- This drawing is not for construction
2- All Dimension are in millimeters
3- Dimensions are not to be scaled directly from drawings
4- All dimensions are to be checked on site and the Architect is to be inform of any discrepancies before construction commences
5- All references to drawings refer to current revision of that drawing
6- The Copyright of this drawing belongs to Archali Ltd.

Rev.	Date	Revisions

FOR PLANNING - Loft Conversion

ARCH
ARCHITECTURAL DESIGN STUDIO
33B Grand Parade, Green Lanes,
Haringey, London, N4 1LG
Tel: 0208 809 2320 - 0784241 0527
Web: www.archpl.co.uk

Client	Mr. Wahid Issa		
Project	88 Scotland Green, London, N17 9TU		
Scale	1/100@A3	Date	06/2016
Drawn By	VC	Checked By	AEC
Project No.	Drawing No.	Revision	
0640	A101	-	
Drawing title	Existing Floor Plans		

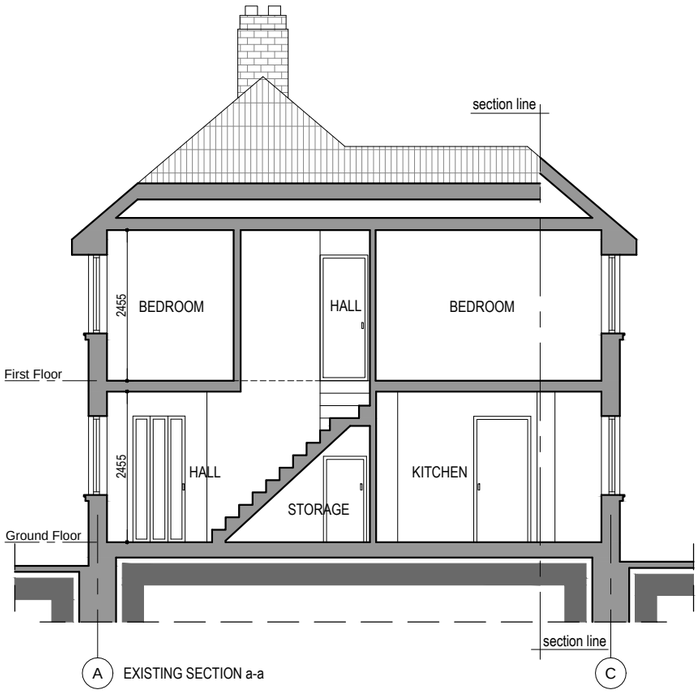

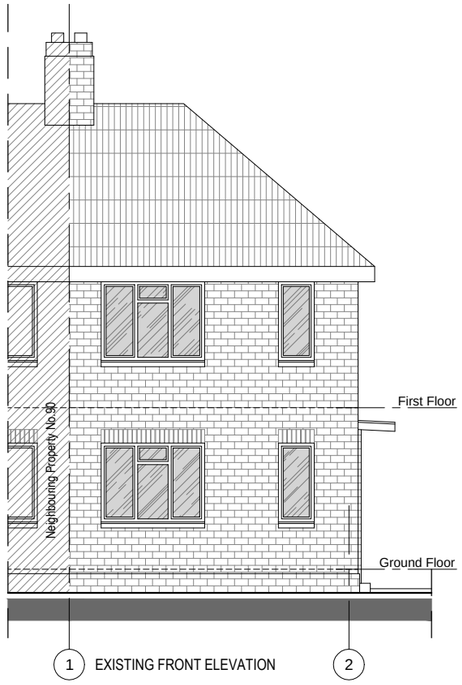

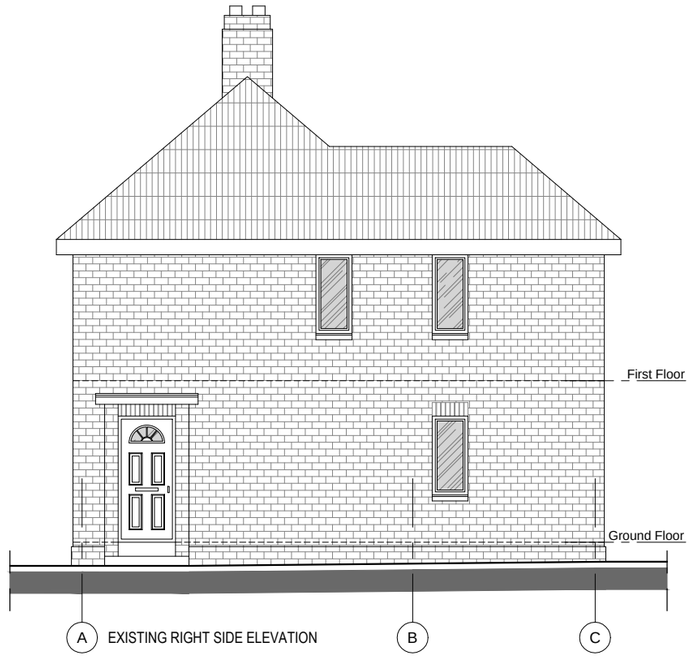

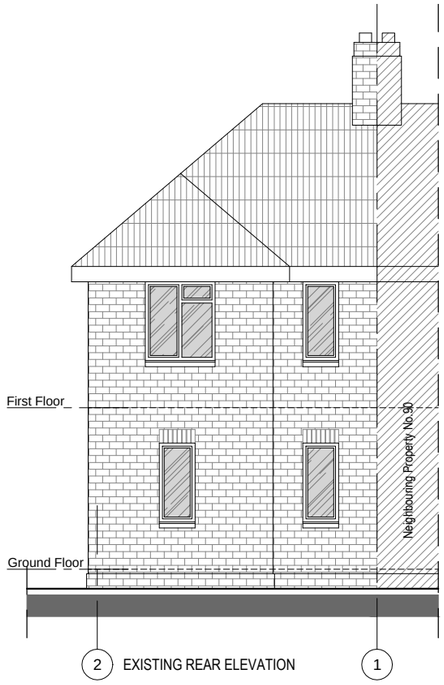

WALLS / CEILINGS LEGEND:
EXISTING WALLS / CEILINGS
PROPOSED WALLS / CEILINGS
WALLS / PARTITION TO BE REMOVED

LINES / HATCHES LEGEND:
REMOVING INTERVENTIONS
PROPOSED INTERVENTIONS
NEIGHBORING PROPERTIES

NOTE:
THE PROPOSED FINISHES TO MATCH WITH THE EXISTING

Notes
1- This drawing is not for construction
2- All Dimension are in millimeters
3- Dimensions are not to be scaled directly from drawings
4- All dimensions are to be checked on site and the Architect is to be inform of any discrepancies before construction commences
5- All references to drawings refer to current revision of that drawing
6- The Copyright of this drawing belongs to Archali Ltd.

0 1 2 3 4 6m
scale 1:100

Rev.	Date	Revisions

FOR PLANNING - Loft Conversion

ARCH
ARCHITECTURAL DESIGN STUDIO
33B Grand Parade, Green Lanes,
Haringey, London, N4 1LG
Tel: 0208 809 2320 - 0784241 0527
Web: www.archpl.co.uk

Client	Mr. Wahid Issa		
Project	88 Scotland Green, London, N17 9TU		
Scale	1/100@A3	Date	06/2016
Drawn By	VC	Checked By	AEC
Project No.	Drawing No.	Revision	
0640	A102	-	

Drawing title
Existing Section a-a and Elevations

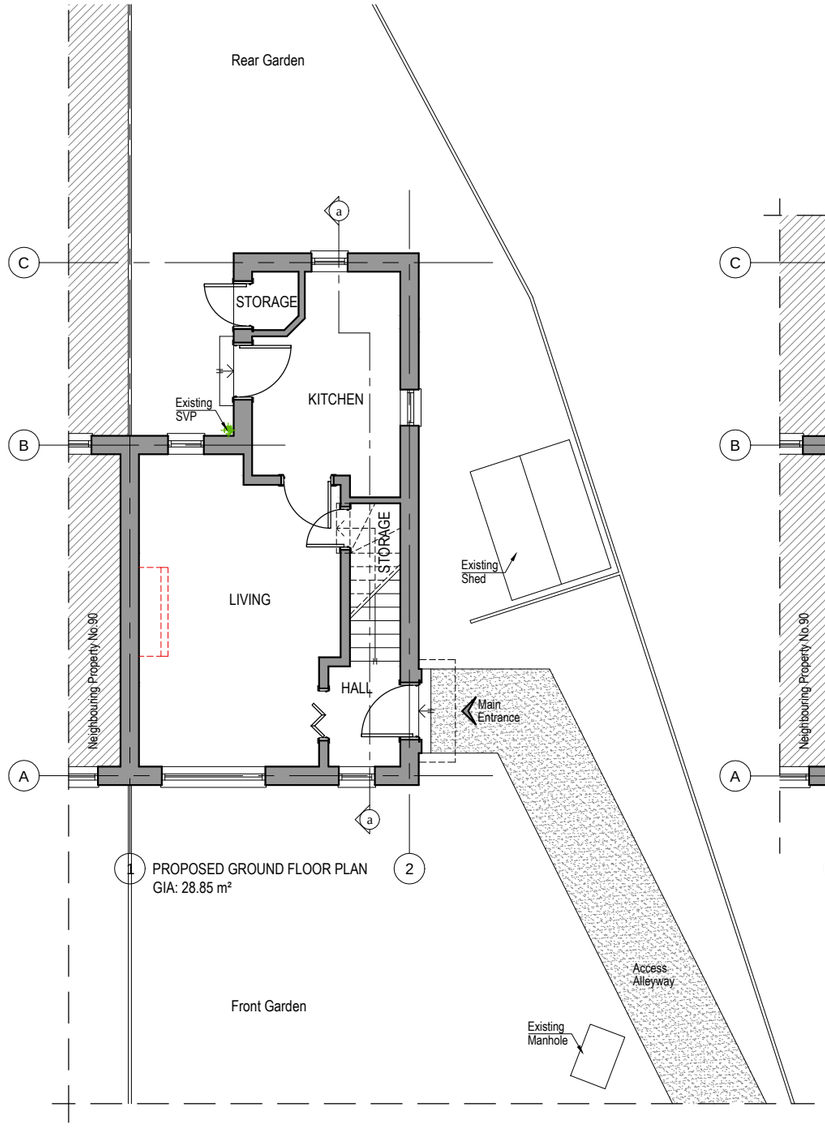

1 PROPOSED GROUND FLOOR PLAN
GIA: 28.85 m²

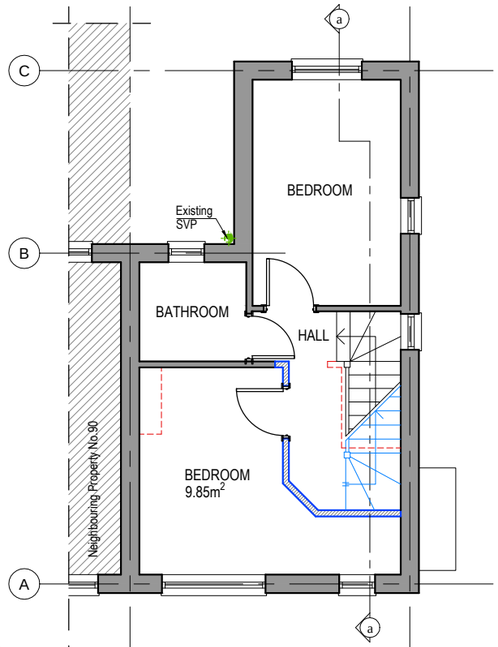

1 PROPOSED FIRST FLOOR PLAN
GIA: 28.85 m²

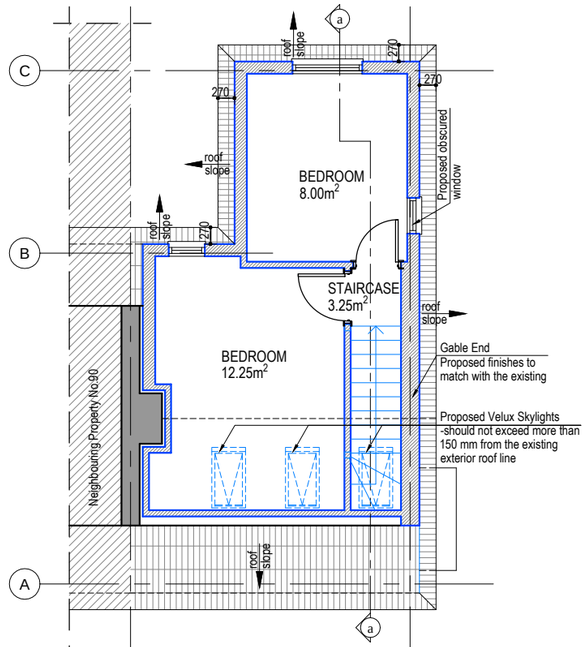

1 PROPOSED LOFT FLOOR PLAN
GIA: 24.20 m²

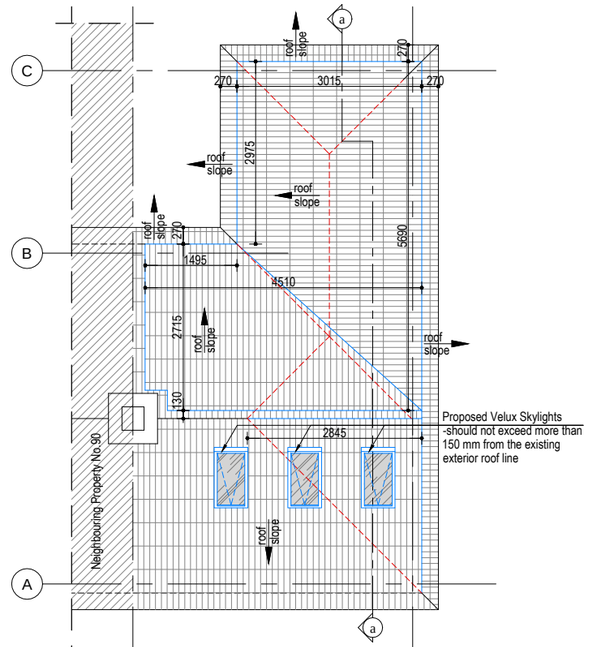

1 PROPOSED ROOF PLAN

0 1 2 3 4 6m

scale 1:100

WALLS / CEILINGS LEGEND:
- EXISTING WALLS / CEILINGS
- WALLS / PARTITION TO BE REMOVED
- PROPOSED WALLS / CEILINGS

LINES / HATCHES LEGEND:
- REMOVING INTERVENTIONS
- PROPOSED INTERVENTIONS

NOTE:
THE PROPOSED FINISHES TO MATCH WITH THE EXISTING

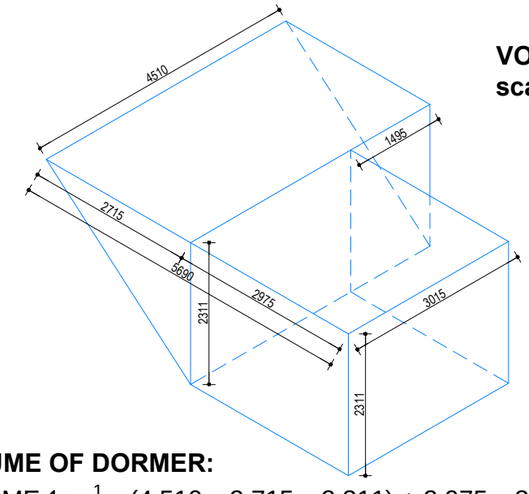

VOLUME CALCULATION
scale 1:100

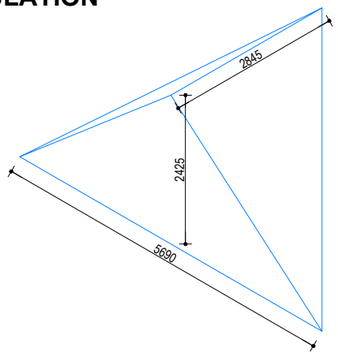

VOLUME OF DORMER:

VOLUME 1 = $\frac{1}{2}$ x (4.510 x 2.715 x 2.311) + 2.975 x 3.015 x 2.311
VOLUME 1 = 34.90 m³

TOTAL VOLUME (VOLUME 1 + VOLUME 2):

V1+V2 = 34.90 + 6.55 = 41.45 m³
TOTAL VOLUME = 41.45m³ < 50m³

VOLUME OF GABLE END:

VOLUME 2 = $\frac{1}{6}$ x (5.690 x 2.425 x 2.845)
VOLUME 2 = 6.55 m³

Notes
1- This drawing is not for construction
2- All Dimension are in millimeters
3- Dimensions are not to be scaled directly from drawings
4- All dimensions are to be checked on site and the Architect is to be inform of any discrepancies before construction commences
5- All references to drawings refer to current revision of that drawing
6- The Copyright of this drawing belongs to Archend Ltd.

Rev.	Date	Revisions

FOR PLANNING - Loft Conversion

ARCH
ARCHITECTURAL DESIGN STUDIO
33B Grand Parade, Green Lanes,
Haringey, London, N4 1LG
Tel: 0208 809 2320 - 0784241 0527
Web: www.archpl.co.uk

Client	Mr. Wahid Issa		
Project	88 Scotland Green, London, N17 9TU		
Scale	1/100@A3	Date	06/2016
Drawn By	VC	Checked By	AEC
Project No.	Drawing No.	Revision	
0640	A103	-	
Drawing title	Proposed Floor Plans		

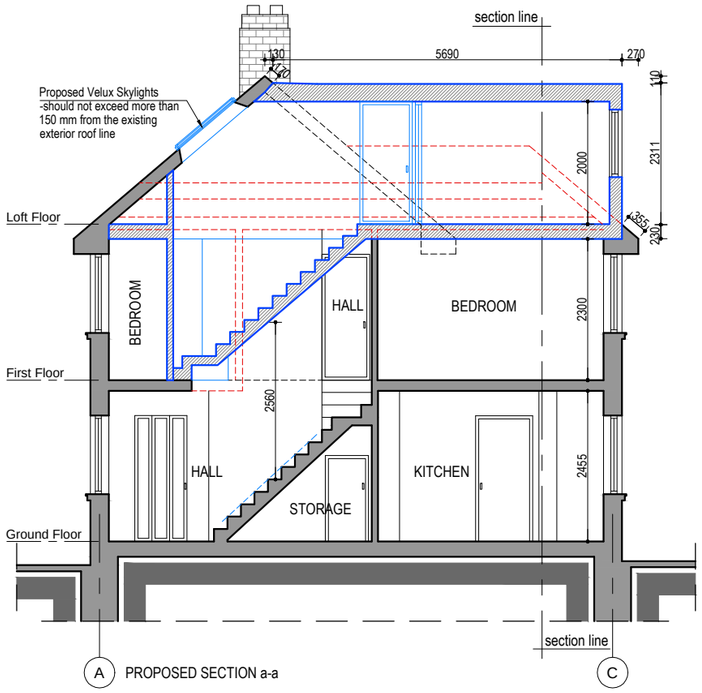

A PROPOSED SECTION a-a C

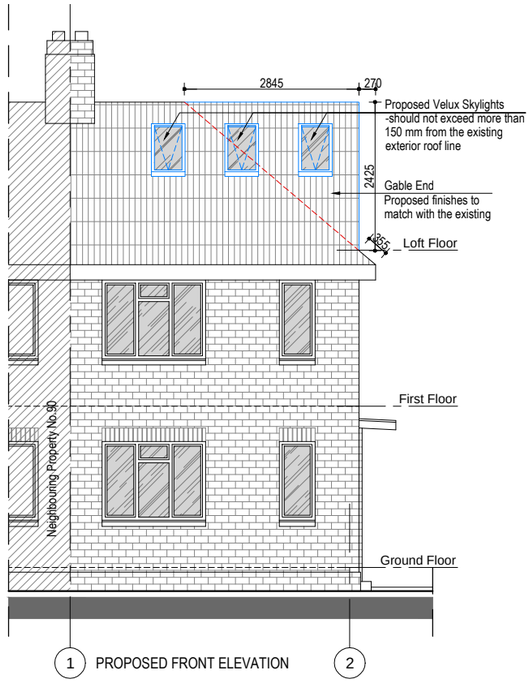

1 PROPOSED FRONT ELEVATION 2

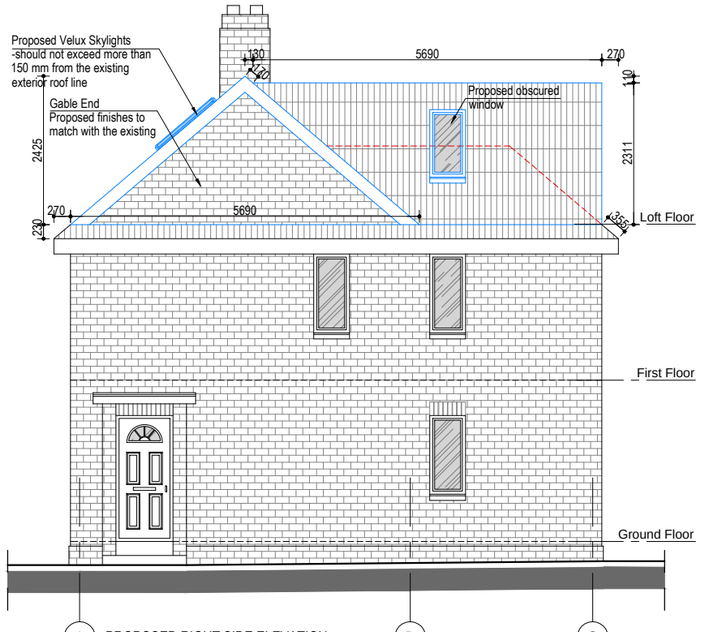

A PROPOSED RIGHT SIDE ELEVATION B C

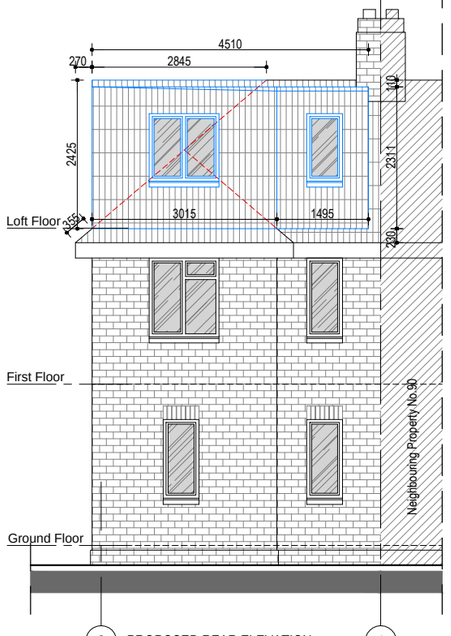

2 PROPOSED REAR ELEVATION 1

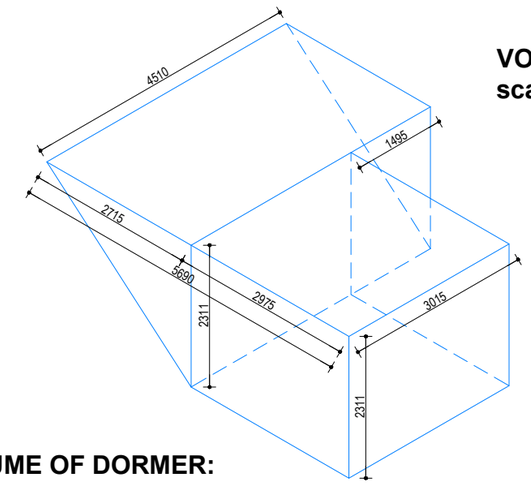

VOLUME CALCULATION
scale 1:100

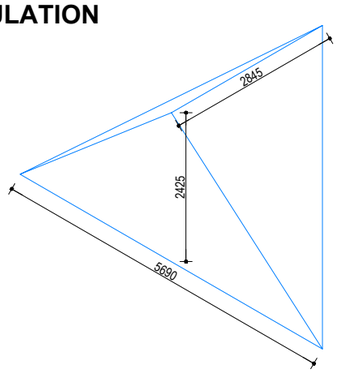

VOLUME OF DORMER:
VOLUME 1 = $\frac{1}{2}$ x (4.510 x 2.715 x 2.311) + 2.975 x 3.015 x 2.311
VOLUME 1 = 34.90 m³

VOLUME OF GABLE END:
VOLUME 2 = $\frac{1}{6}$ x (5.690 x 2.425 x 2.845)
VOLUME 2 = 6.55 m³

TOTAL VOLUME (VOLUME 1 + VOLUME 2):
V1+V2 = 34.90 + 6.55 = 41.45 m³
TOTAL VOLUME = 41.45m³ < 50m³

WALLS / CEILINGS LEGEND:
- EXISTING WALLS / CEILINGS
- WALLS / PARTITION TO BE REMOVED
- PROPOSED WALLS / CEILINGS

LINES / HATCHES LEGEND:
- REMOVING INTERVENTIONS
- PROPOSED INTERVENTIONS

NOTE:
THE PROPOSED FINISHES TO MATCH WITH THE EXISTING

0 1 2 3 4 6m
scale 1:100

Notes
1- This drawing is not for construction
2- All Dimension are in millimeters
3- Dimensions are not to be scaled directly from drawings
4- All dimensions are to be checked on site and the Architect is to be inform of any discrepancies before construction commences
5- All references to drawings refer to current revision of that drawing
6- The Copyright of this drawing belongs to Archend Ltd.

Rev.	Date	Revisions

FOR PLANNING - Loft Conversion

ARCH
ARCHITECTURAL DESIGN STUDIO
33B Grand Parade, Green Lanes,
Haringey, London, N4 1LG
Tel: 0208 809 2320 - 0784241 0527
Web: www.archpl.co.uk

Client	Mr. Wahid Issa		
Project	88 Scotland Green, London, N17 9TU		
Scale	1/100@A3	Date	06/2016
Drawn By	VC	Checked By	AEC
Project No.	Drawing No.	Revision	
0640	A104	-	

Drawing title: Proposed Section a-a and Elevations