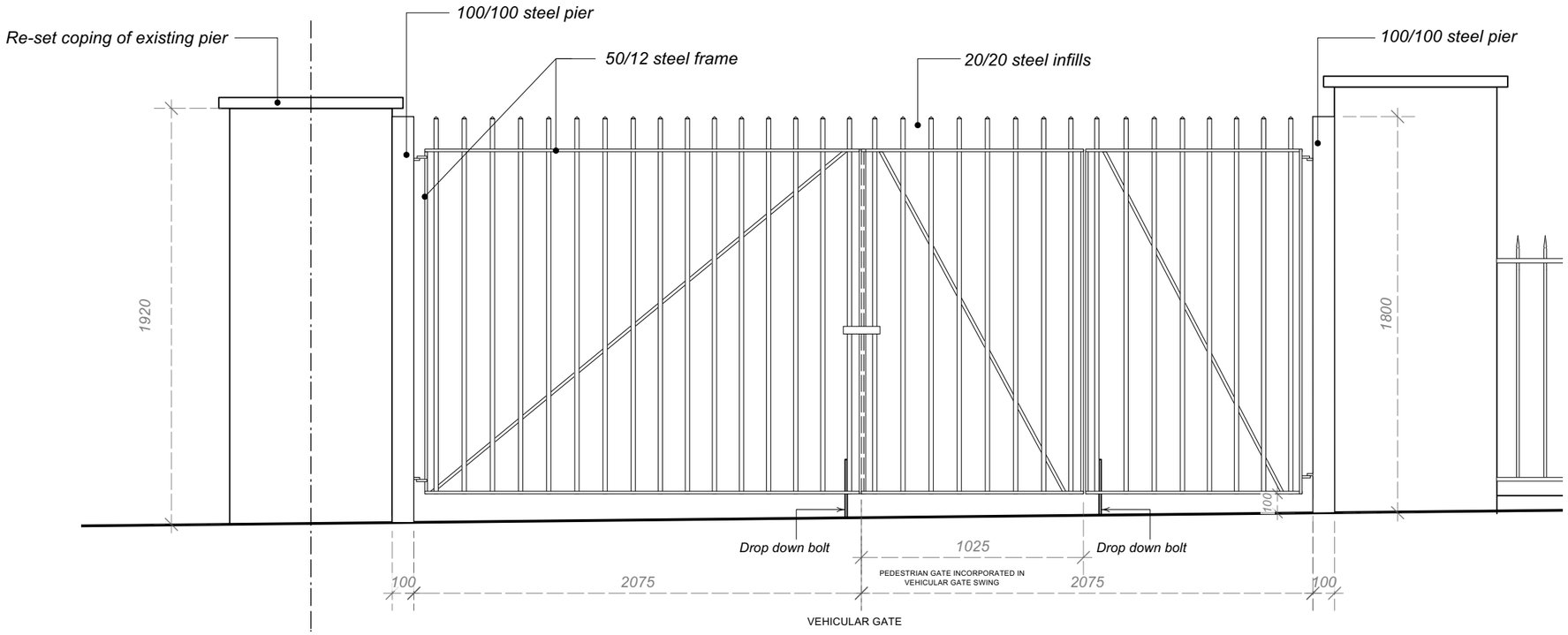

1 BG14-04 **Proposed Northeast Boundary Elevation**
1:25@A3

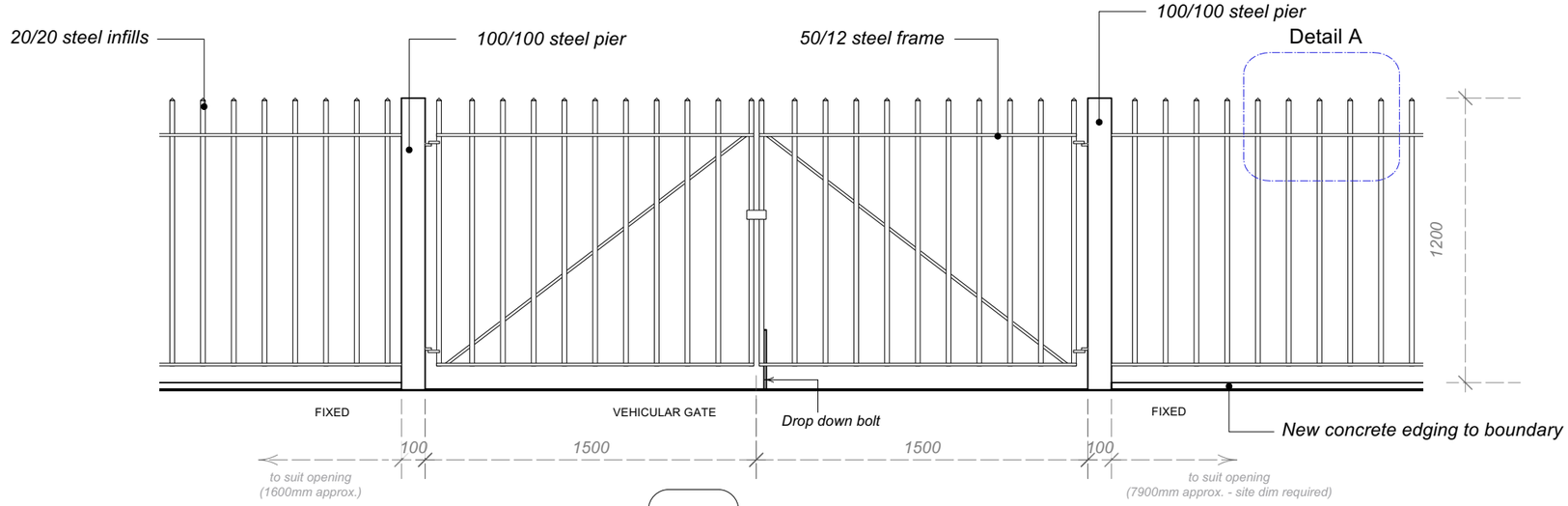

2 BG14-04 **Proposed Northwest Boundary Elevation**
1:25@A3

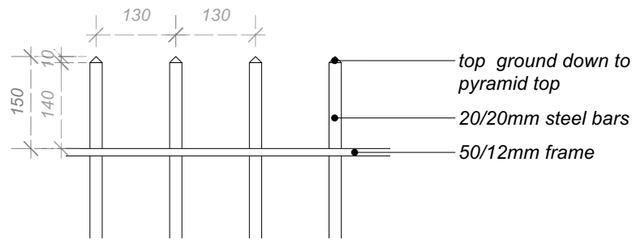

3 BG14-04 **Detail A**
1:10@A3

0 500 1000 1500 2000 2500 mm

0 1 2 3 4 5 M

Notes

1. Lockable latch to pedestrian and vehicular gates. Padlock to be supplied by tenant.
2. Upper part of gates and railing to be lined (see above); Bottom to be 100mm above finished level;

Revisions

A 17/03/2023 Gate design update

Haringey Heritage Action Zone

Proposed Vehicular and Pedestrian Gates Design

14 Bruce Grove

ROGER MEARS ARCHITECTS LLP
Union Chapel, Compton Avenue London N1 2XD
rma@rmears.co.uk tel 020 7359 8222
www.rmears.co.uk

© Roger Mears Architects LLP 2022

Date	Scale	Job No.	Code	Dwg No.	Rev.
Jan 2022	various@ A3	2141		**BG14-04**	A