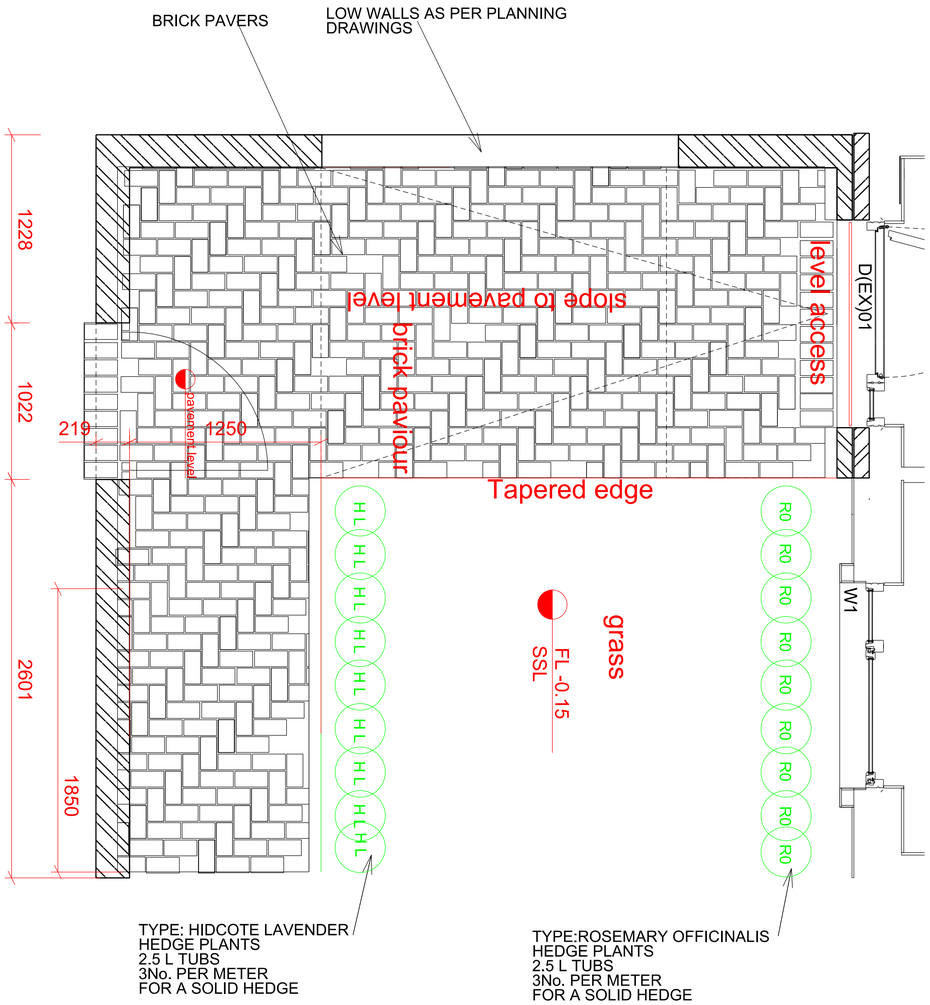

FRONT GARDEN PLAN

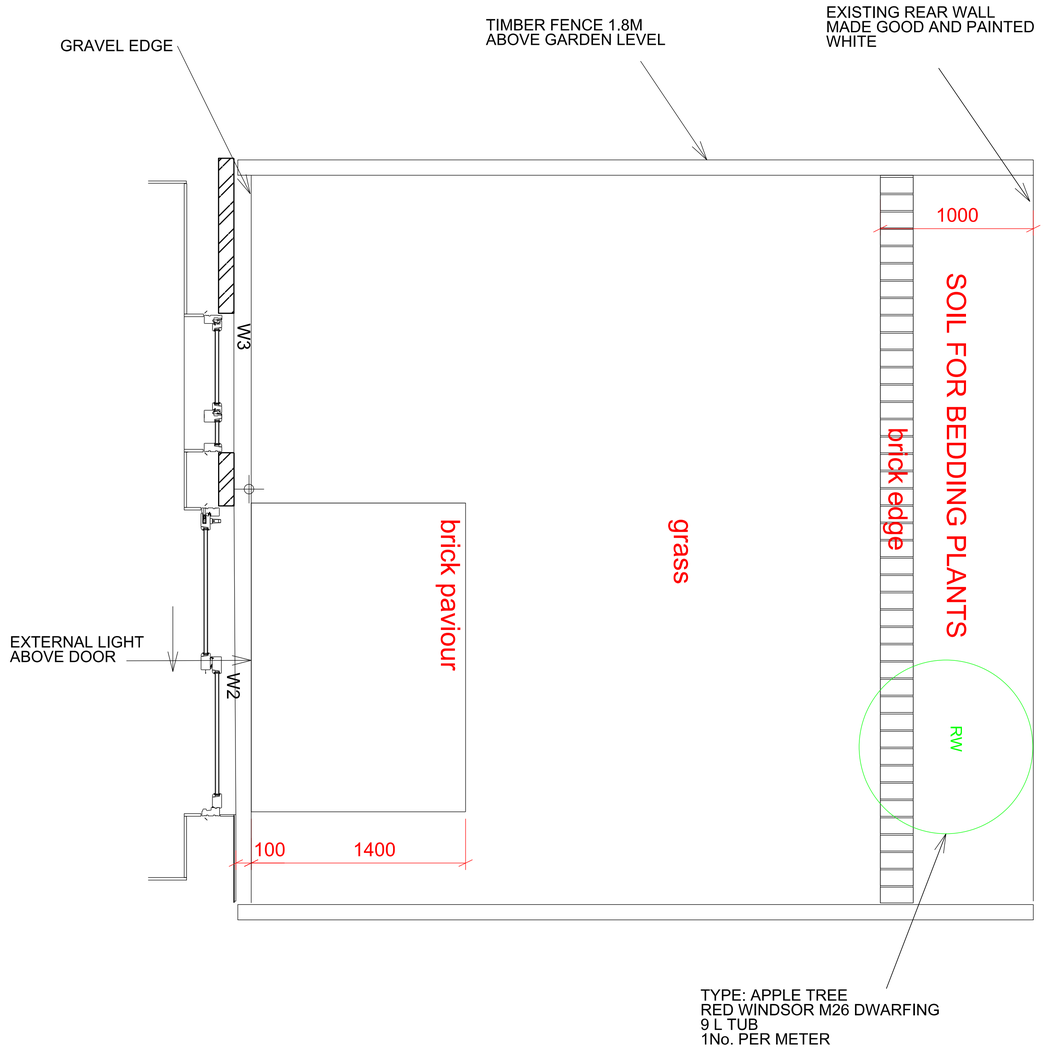

REAR GARDEN PLAN

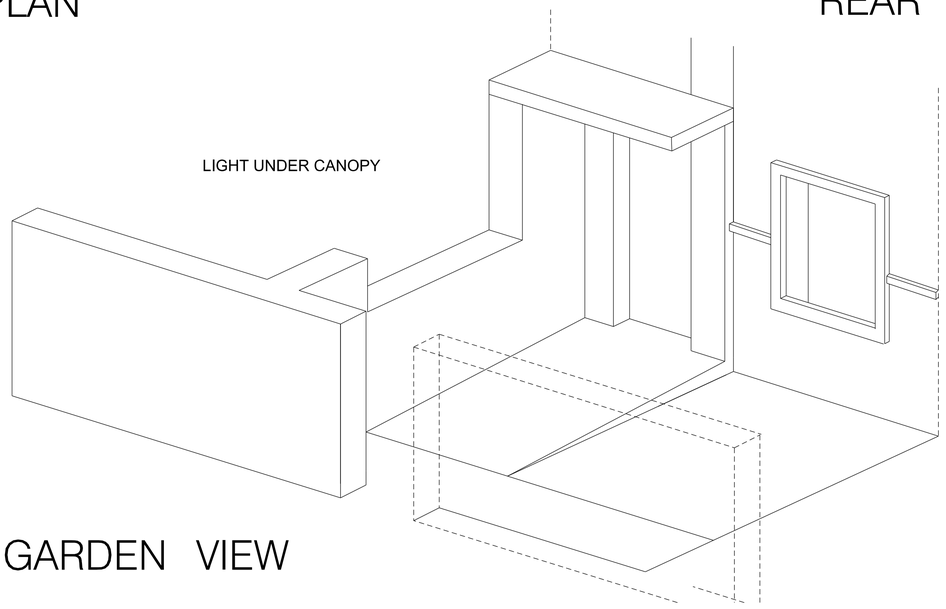

FRONT GARDEN VIEW

NOTES
1. DO NOT SCALE. ALL DIMENSIONS ARE TO BE CHECKED AND CONFIRMED BY THE CONTRACTOR ON SITE
2. ANY DISCREPANCIES ARE TO BE REPORTED BY THE CONTRACTOR BEFORE WORKS ARE COMMENCED
3. THIS DRAWING TO BE READ IN CONJUNCTION WITH ALL OTHER ARCHITECTS AND ENGINEERS DRAWINGS AND SPECIFICATIONS
4. THIS DRAWING IS THE COPYRIGHT OF PMA-STUDIO ARCHITECTS (PMA-STUDIO)
5. ALL DIMENSIONS AND SITE FIT BASED ON LASER SURVEY BY GREENWATCH DRAWING NO.s 17650
6. THIS DRAWING IS FOR BUILDING REGULATIONS SUBMISSIONS PURPOSES ONLY
7. READ IN CONJUNCTION WITH PMA DOCUMENT 108/SCH/5-03
8. ALL MATERIALS AND WORKMANSHIP TO COMPLY WITH RELEVANT & CURRENT BRITISH STANDARDS AND CODES OF PRACTICE AND BRITISH REGULATIONS.SAMPLES OF WORK WHERE RELEVANT TO BE APPROVED BY CLIENT PRIOR TO CONSTRUCTION.

KEY TO ABBREVIATIONS:
FFL FINISHED FLOOR LEVEL
SSL STRUCTURAL SLAB LEVEL
TOS: TOP OF STEEL

PV PASSIVE VENTS
FR FRIDGE
FF FRIDGE FREEZER
DW DISH WASHER
EX HOB EXTRACTOR / FAN
IH INDUCTION HOB UNLESS NOTED
WM WASHING MACHINE
HVSC HOT WATER CYLINDER
HR HAND RAIL

RWP RAIN WATER PIPE
SVP SOIL AND VENT PIPE
HD HEAT DETECTOR
Be ELECTRIC BOILER CPSU

FD30S FIRE DOOR 30Hr. PLUS SMOKE SEAL
D1 DOOR NUMBER

HD:HEAT DETECTOR WIRED AS SD
SD:SMOKE DETECTOR MAINS WIRED FIRE ALARM SYSTEM INTERLINKED WITH BATTERY BACKUP

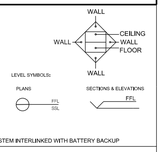

REV	DATE	COMMENTS

PROJECT
TYNEMOUTH GARAGES
LONDON
N15 4AT

ARCHITECT
PMA-STUDIO
VIVANTE STUDIOS
MONKERY BARN, CHURCH ROAD
OX44 7PB

chris@pma-studio.com

STATUS | FORMAT A1

N

0 0.5 1.0

UNIT 1
+0.00 = 8.64 M
PMA SURVEY
DATUM DATUM

TITLE
EXTERNAL LEVLES AND FINISHES
HOUSE 2 - TYPICAL

DATE: MAY 23 | CHECKED BY: | SCALE: 1:20 (unless noted otherwise)

DRAWING NO. 108 / BR / 05 | REV