# EXISTING WINDOW TYPE 2

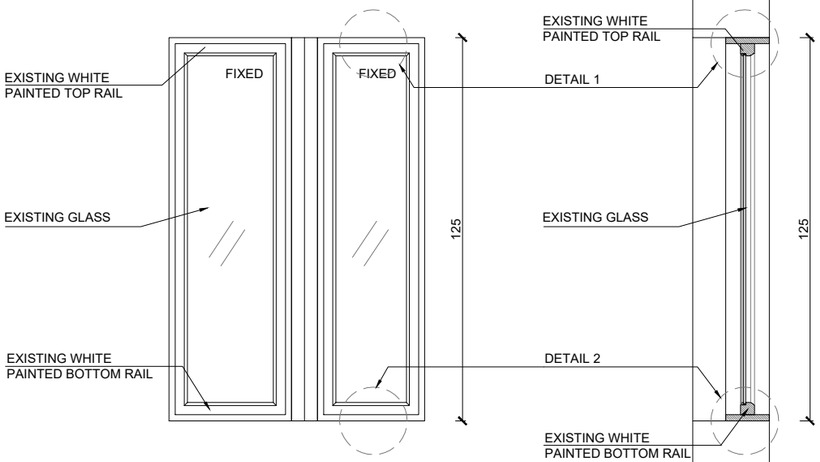


EXISTING ELEVATION
Scale 1:20

EXISTING SECTION
Scale 1:20

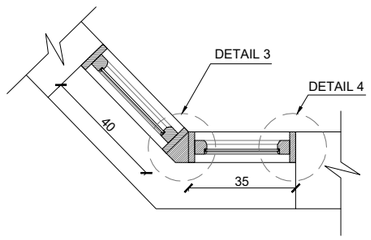


EXISTING PLAN
Scale 1:20

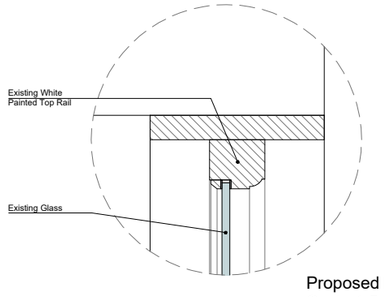


Proposed Detail 1
Scale 1:5

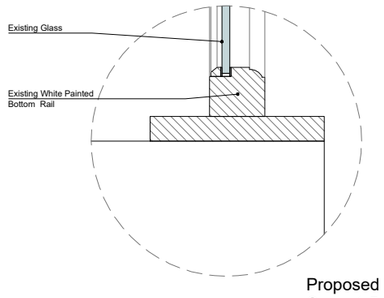


Proposed Detail 1
Scale 1:5

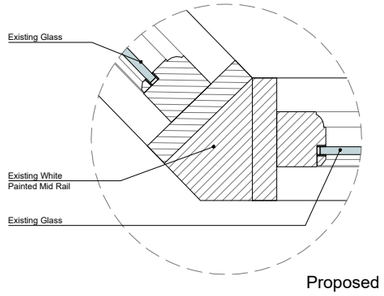


Proposed Detail 1
Scale 1:5

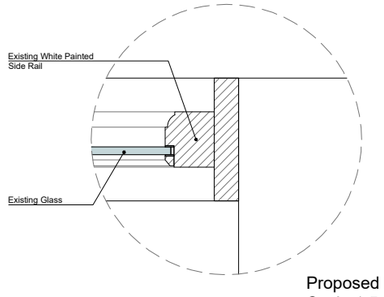


Proposed Detail 1
Scale 1:5

STUDIO 47 ARCHITECTURE LTD

Suite 2, Grove Hall Court
Hall Road
St. John`s Wood
NW8 9NR
Tel: 0208 049 3300
Email:
info@studio47architects.com
www.studio47architects.com

NOTES:
THE CONTRACTORS ARE TO CHECK ALL DIMENSIONS, DRAIN RUNS AND GENERAL CONDITIONS ON SITE BEFORE WORKS COMMENCE, AND INFORM STUDIO 47 ARCHITECTURE IMMEDIATELY UPON DISCOVERY OF ANY ERRORS, OMISSIONS OR DISCREPANCIES.ALL WORKS ARE TO BE CARRIED OUT IN ACCORDANCE WITH CURRENT BUILDING REGULATIONS, BRITISH STANDARDS, CODE OF PRACTICE AND LOCAL AUTHORITY REQUIREMENTS. DO NOT SCALE FROM THIS DRAWING WITHOUT FIRST OBTAINING WRITTEN AUTHORIZATION FROM STUDIO 47 ARCHITECTURE.
THE CONTENTS OF THIS PLAN INCLUDING THE PRINTED NOTES ARE COPYRIGHT AND REPRODUCTION IN WHOLE OR PART IS NOT PERMITTED WITHOUT PRIOR CONSENT OF STUDIO 47 ARCHITECTURE IN WRITING.

**DRAWING STATUS**

| | | | |
|---|---|---|---|
| PRELIMINARY | | TENDER | |
| PLANNING | ■ | BILLS OF QUANTITIES | |
| BUILDING REGULATIONS | | CONSTRUCTION | |
| COMMENTS/APPROVAL | | AS BUILT | |

Scale 1:20 @ A3
0 20cm 40cm 60cm 80cm

Scale 1:10 @ A3
0 10cm 20cm 30cm 40cm

Scale 1:5 @ A3
0 5cm 10cm 15cm 20cm

| REF.NO: | REVISION |
|---|---|
| 20210703-PL12A | R00 |

**PROJECT**

33 Muswell Hill
Harringey
London
N10 3PR

**TITLE**

Existing Window Details
Type 2

| SCALE | DATE |
|---|---|
| A3 1:20 / 1:10<br>A1 1:10 / 1:5 | 17/08/23 |