GREENCOAT®
COLORFUL STEEL

GreenCoat PLX – "The Roofer's Choice"

50 Years
TECHNICAL GUARANTEE

Installation guide for standing seam systems

SSAB

This installation guide deals with standing seam systems made with GreenCoat PLX on a boarded roof covering.

The instructions in this installation guide are general in nature and the drawings are only intended to show typical details. Therefore, they should be modified from case to case in order to suit the actual conditions.

The GreenCoat® story	3
GreenCoat PLX	4
Steel sheet as roofing material	5
Standing seam systems	5
Material for steel sheet roofing	6
Thermal movements	6
Strip lengths and fixed zones	7
Roof covering for steel sheet roofing	8
Securing by means of clips	8
Wind loading	9
Securing the clips to timber roof covering	10
Roofing on timber roof covering – design details	11
Work procedure for folding	12
Seam cross-section	13
Eaves, external gutter, apex and mono ridge	14
Ridge	15
Verge	16
Abutment	17
Valley	18
Secret gutter	19
Rooflight	20
Penetrations	22
Cladding abutment and drip	23
Corners	24
Coping	26
Capping	26
Window	27
Roof penetration	30
Warm roofs	32
GreenCoat® reference building: Tin House	36
GreenCoat® reference building: Fjärilen (the butterfly)	38

The GreenCoat® story

There are many things that set GreenCoat® apart from other building materials. One of the most important is sustainability.

Most GreenCoat® products feature a bio-based coating which uses a substantial portion of Swedish rapeseed oil instead of traditional fossil fuel oils.

This unique, patented solution from SSAB reduces the environmental footprint significantly – and it makes the GreenCoat® colour coated steel product portfolio the market's greenest offering for roofs and façades.

THE IDEA IS BORN

What started in 2002 as just an idea has resulted in bringing major environmental changes to the building industry.

At the time, the greenest step that the industry had taken was to begin removing chromate from paint systems for colour coated steel products, something that is now standard. For us this was not enough. Our researchers and engineers believed that future market demands would place even more focus on the environment.

Therefore, the idea was to create a better colour coating made from natural sources. One that provides real environmental benefits, and even better performance.

After over 10 years of development and outdoor testing, 6 peer reviewed scientific papers, 1 PhD thesis, over 10 conference presentations and 1 worldwide patent, GreenCoat® became a reality.

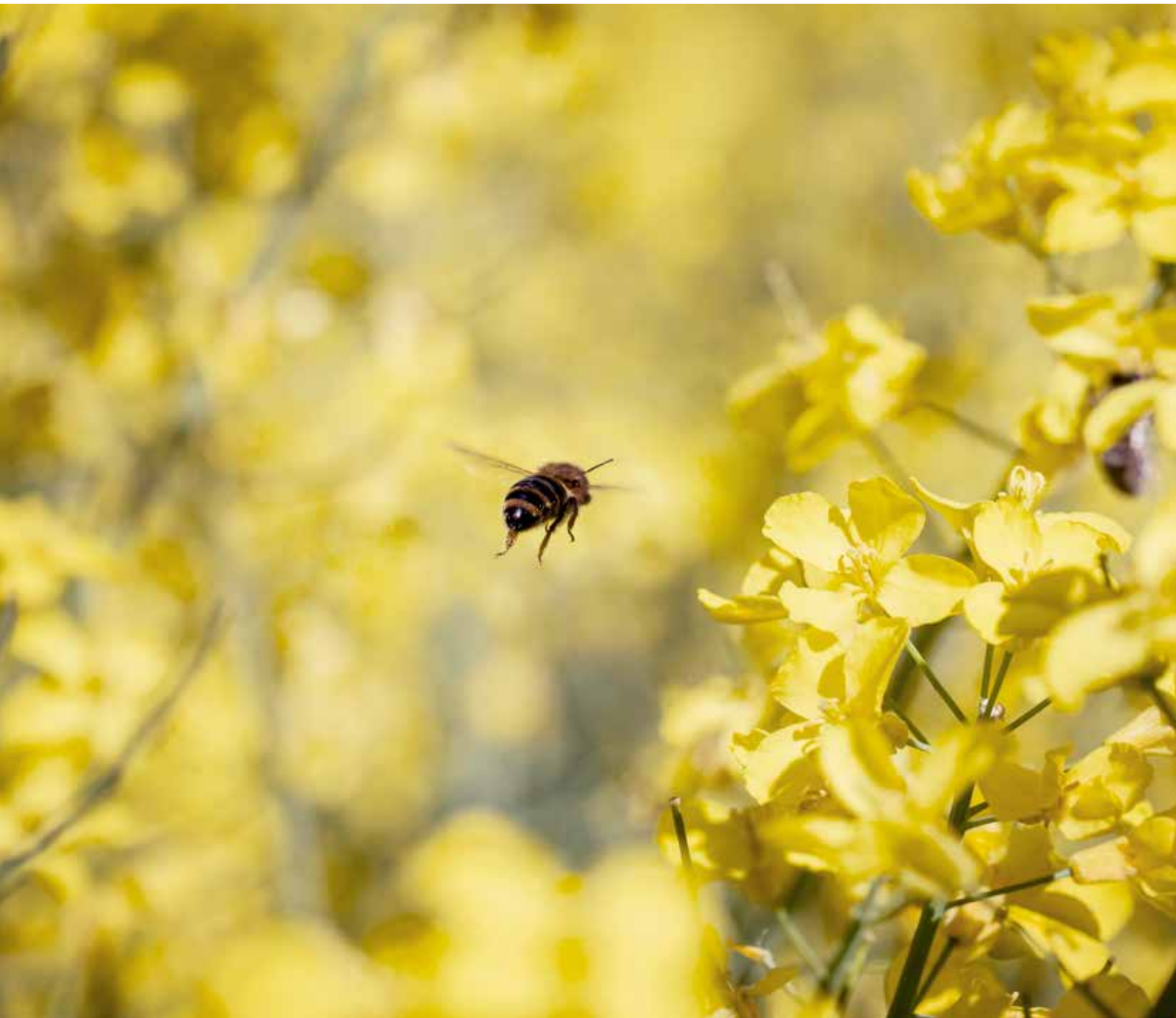

GreenCoat PLX – "The Roofer's Choice"
Highest level of durability for standing seam systems

GreenCoat PLX colour coated steel products from SSAB Swedish Steel were developed together with tinsmiths and have become "The Roofer's Choice". They are tailor-made products for tinsmith applications, made from top Nordic quality steel, have environmental benefits and are durable. GreenCoat PLX products come with a 50-year technical guarantee and a 25-year aesthetical guarantee.

Forming and seaming GreenCoat PLX is easy and standard metal roofing tools and equipment can be used. GreenCoat PLX is even formable by hand and will not crack - even at temperatures down to -15°C which many other metals do not offer. This allows for cost-efficient year-round installation. GreenCoat PLX has practically no springback, which provides for very tight folding and can be installed onto a warm or cold roof build-up. GreenCoat PLX can be soft-soldered exactly like zinc.

A 350g/m^2 zinc and a 50 µm coating layer provide excellent corrosion protection of our GreenCoat PLX Pural BT product and also allows for easy soldering.

GreenCoat PLX Pural BT products offer the highest level of durability for long strip roofing and are highly resistant to corrosion (RC5), UV radiation (Ruv4) and scratches. GreenCoat PLX products offer the lowest thermal expansion of all metals, like zinc or aluminum, and prevent buckling and deformation for decades.

GreenCoat PLX enables sheet metal roofers and architects to create roofs and façades with complex shapes and designs. Apart from conventional standing seam techniques used in roofing and façades, it can also be applied in the design of fascias and gutters. Additional fields of application include rainwater management window ledges, flashings, gutters and other roofing accessories.

In an effort to further increase the sustainability of our GreenCoat® products, SSAB's first fossil-free steel will be available by 2026. Our steel production will emit water instead of CO_2, which will be unique to the market.

Steel sheet as a roofing material

Steel sheet has a long tradition as a roofing material, however, it has undergone great changes over the years. The use of galvanised steel sheet which was then painted on site began towards the end of the 19th century.

To an increasing extent, colour coated steel sheet of a special soft grade from SSAB is being used today.

During the 19th century, the short sheet roofing method was used for steel roofing. Short sheets are used in this method forming standing seams with transverse seams made to join the sheets together. Short roofing is used today mainly for buildings on which the aim is to accentuate the appearance and quality of old roofing traditions.

However, it's the standing seam system that dominates today as the preferred steel sheet roofing method. Standing seam systems can be used for all types of buildings, provided that the pitch is sufficient, i.e. above 5°.

Many factors favour the use of steel sheet as roofing material. The reasons for using steel sheet as roofing material on industrial, commercial and residential buildings include appearance, resistance to fire, resistance to physical damage, low thermal expansion compared to other metals and a long useful life. In addition, colour coated steel sheet is 100% recyclable, which makes steel sheet a highly environmentally appropriate product.

Standing seam systems are often particularly appropriate if the roof pitch is shallow.

FOLDED SHEET ON WALLS

Strip or sheet cladding of walls offers wide opportunities for attractive and daring designs.

Full-length sheets are rarely installed in order to avoid the difficulty of handling long sheets. Typical sheet lengths for cladding are 4 m. It is common to use an angled seam as shown in the image on the right.

The strips can be arranged horizontally, sloping or vertically. The angle seam gives greater emphasis to the sheet joints.

In horizontal or sloping runs of strip, the fold should always face as shown in the figure in order to meet the water tightness requirements.

In windy locations, it may be advisable to reduce the seam spacing to 300–500 mm in order to prevent fatigue damage and noise caused by movements of the sheet.

Plywood with underlay felt is usually employed as the base for wall cladding. *NB* Following the Grenfell fire in London the use of flammable materials is banned at high level and on public buildings.*

Standing seam systems

In principle, any building can be roofed with steel sheet. One of the limitations in Northern countries is the pitch of the roof, which should be at least 1:10 or 5°. If full-length strips are used, if outside gutters are fitted for draining the roof, and if there are no obstacles in the form of skylights or the like, a roof pitch down to 3° (or about 1:16) may be acceptable.

The normal distance between the seams is 530 mm produced from a coil width of 600 mm. For exposed locations and vertical cladding the standing seam distance is reduced to 430 mm from 500 mm wide coil.

Material for steel sheet roofing

GreenCoat PLX is a colour coated steel product adapted for steel sheet roofing.

GreenCoat PLX products have a special steel grade suitable for both mechanical and manual folding.

The steel is annealed so that the springback is practically zero, and this is vitally important for ensuring that the seams will seal reliably. The yield strength of the material is around 160 N/mm². The thickness of the steel is, as standard, 0.6 mm.

GREENCOAT PLX

The metallic Z 350 hot-dip galvanizing coating is used for GreenCoat PLX, i.e. a zinc coating of 350 g/m² equally distributed between both sides. The thickness of metal coating is about 25 µm (0.025 mm) on each side.

GreenCoat PLX Pural BT has a coating, with a total thickness of 50 µm. The thickness of the paint coat is optimized for wear resistance, weathering resistance and consumption of resources.

GreenCoat PLX is extremely suitable for standing seam systems. The product can be mechanically and manually folded without any problems. The coating has very good gloss and colour retention properties. The specification of the coating is given in a separate product leaflet.

A thin coat of epoxy type paint is applied to the underside of the sheet. The colour of the paint is limestone turquoise. The reverse side of the sheet is marked with the name GreenCoat® and the date of manufacture.

Thermal movements

For standing seam systems, it is important to take into account the movements of the strip occurring as a result of temperature changes. The steel sheet may sustain damage if insufficient expansion allowance is provided at verges or eaves, at roof upstands or at walls.

All materials expand or contract when the temperature changes. The change in length of aluminum sheet and zinc sheet is about twice that of steel sheet. The sheet length increases in the summer and decreases in the winter. The temperature of the roof material in the summer may be up to 75°C, while in the winter, it could conceivably be as low as –35°C. The length of the roof covering also changes, and the calculations below are therefore done to be on the safe side.

The temperature of the steel sheet at the time of the installation determines how the length will change from its original length in the summer and in the winter. The table below gives particulars of the change in length that can be expected for different installation temperatures.

In the table below, L is the distance in metres from the point where the movement is zero (fixed point) to the end of the sheet.

TABLE 1. CHANGE IN LENGTH FOR VARIOUS INSTALLATION TEMPERATURES

Installation temperature °C	Change in length in mm	
	Summer (+75° C)	Winter (-35° C)
-10°	+1.1 x L	-0.3 x L
0°	+1.0 x L	-0.4 x L
+10°	+0.9 x L	-0.5 x L
+20°	+0.7 x L	-0.7 x L
+30°	+0.5 x L	-0.8 x L

Example:

Temperature during laying:	+10°C
Distance L from fixed point to eaves:	7 m

Change in length at eaves:

Expansion in the summer:	+ 0.9 x 7 = approx. + 6 mm
Shrinkage in the winter:	- 0.5 x 7 = approx. - 4 mm

It is important to allow for thermal movements so that the sheet or its mountings will not be damaged. Longer strips should be secured by means of both fixed and sliding clips. Space for expansion and contraction must be allowed at joints and connections.

Strip lengths and fixed zones

The maximum permissible strip length is determined by the thermal movements and the facilities provided for taking up these movements. According to common practice, a steel sheet strip may have a continuous length of 15 metres from the centre of the fixed zone.

A fixed clip mounting or some other fixed point at which no movements can or should be taken up is regarded as a fixed zone. Fixed clips do not allow for any movements of the strip in its longitudinal direction, whereas sliding clips can take up a certain amount of movement of the strip. See also the section dealing with securing by means of clips. The way in which temperature movements can be taken up at connections is decisive to the maximum permissible strip lengths.

The way in which fixed and movable zones are arranged is shown in principle below. Page 18 shows an example of how an expansion joint can be designed.

FIGURE 1.

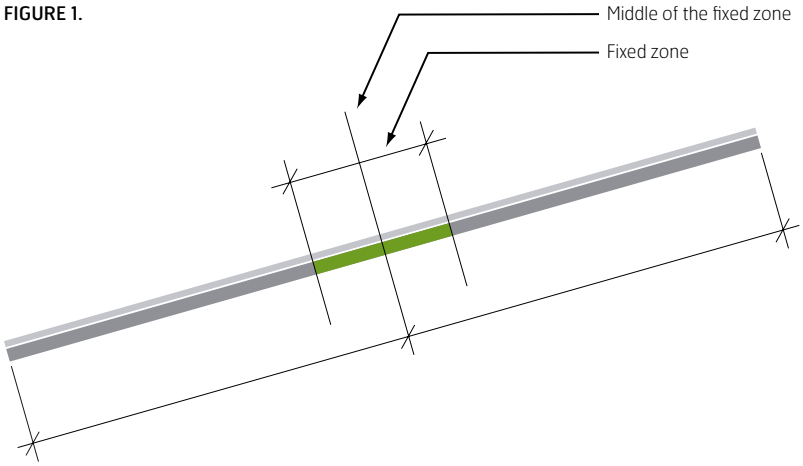

Figure 1.
Fixed and movable zones. The fixed zones should be in the same position at all strips from one gable end to the other, and their locations along the strip length for different roof pitches should be as shown below.

FIGURE 2.

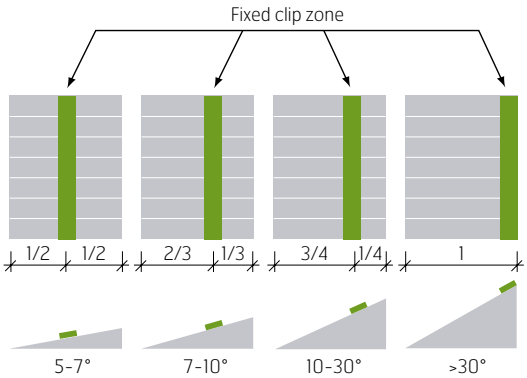

Figure 2.
Location of the fixed zone. The location of the fixed zone should be specified in the documentation and the strip length should be specified in relation to the centre of the zone. The roofing should thus have a fixed zone that is 1 m at which fixed clips are used, while other mountings are made by means of expansion/sliding clips.

Roof covering for steel sheet roofing

Steel sheet roofing can be laid on various types of roof covering, the most common of which are boarded or plywood-covered roofs. A suitable thickness of tongue-and-groove- or penny gapped boarding is 23 mm at a rafter spacing of 0.6 metres. If plywood is used, its thickness must be selected so that the stiffness of the roof covering will be the same as that of the boarding. The minimum thickness should be 18 mm at a rafter spacing of 0.6 m to ensure that the mounting of the clip will be secure. A layer of underlay must always be provided between the roof covering and standing seam systems, ISO-Mat Pro® "for ventilated cold roofs and ISO-Mat Metal®" for non ventilated warm roofs.

FIGURE 3.

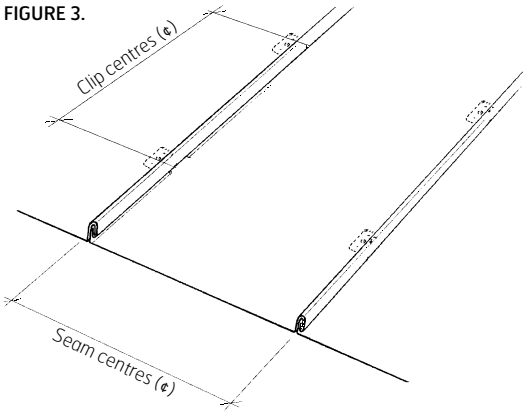

Securing by means of clips

The function of clips are to secure the steel sheet strip to the roof covering. The clip is hooked onto the under-cloak that then forms the inner sheet in the finished seam.

The clip should be made of stainless steel, and should have an ultimate strength of at least 1 kN. The clip should have the correct height in relation to the design of the seam. Fixed clips should be used within the fixed zone (see under temperature movements and strip lengths), and sliding clips in other areas. When fitting the clips, ensure that the sliding part is centred, so that it will be able to take up strip movements in both directions. The clips are secured with stainless steel screws or annular ring shank nails of appropriate thickness and length in line with the substrate.

FIGURE 4.
Typical fixed clip (EFK)

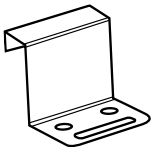

FIGURE 5.
Typical expansion clip (ESE)

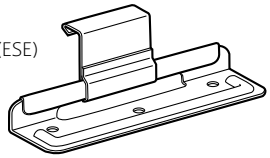

Wind loading

The roof of a building is subjected to suction forces caused by the wind. In the boundary zone along the outer edges of the roof, the wind suction may be 2–3 times higher than that on the inner surface.

The design wind load is determined by the height, design and geographical location of the building. The conditions for determining the wind load are specified in national regulations. The worst conceivable cases for gable roofs and monopitch roofs for Swedish conditions are shown in the figure below. The values are higher for curved roofs.

FIGURE 6.

Gable roof with pitch >5°

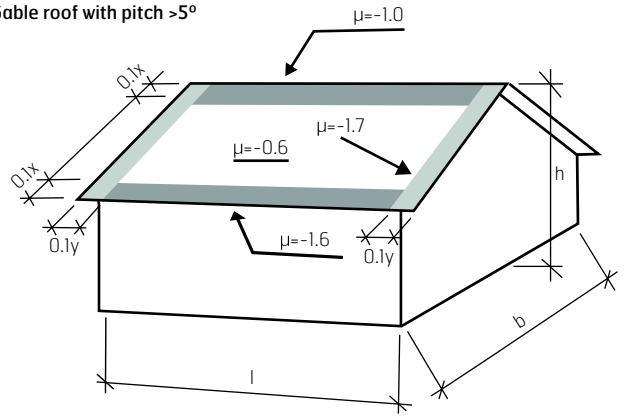

x = lesser of (l and 2h)
y = lesser of (b and 2h)

Monopitch roof, pitch >5°

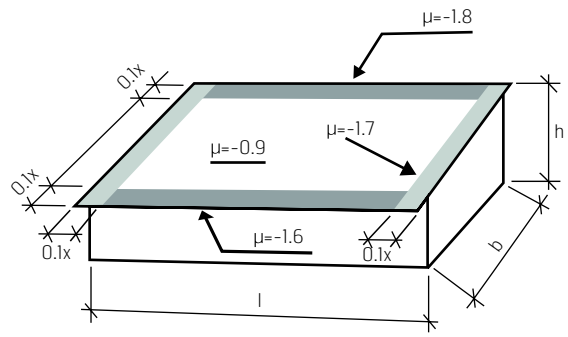

y = lesser of (l and 2h)

In each roof zone, the design suction load can be calculated with the following formula:

$$Q_d = \mu\, 1{,}3^* \, Q_k \ (kN/m^2)$$

Where:
Qd is the design value for the wind load.
μ is the form factor in accordance with Figure 6 or national regulations.
1,3 is the partial coefficient for variable load.
Qk is the characteristic velocity pressure in accordance with national regulations.
***Can be other value in accordance with national regulations.**

From the design suction load, the pull-out force Ft on the clip mounting can be calculated with the following formula:

$$F_t = Q_d \, ¢_{Clips} \, ¢_{Seam} \ (kN/m)$$

Where:
$¢_{clips}$ is the distance between clip centres along the seam (see Figure 3).
$¢_{seam}$ is the distance between the seams (see Figure 3).

Securing the clips to timber roof covering

Clips should be secured by means of screws or nails. The conditions for calculating the pull-out forces in a timber roof covering are specified in national regulations. The pull-out values obtained from experience for 4.0 mm screws in a timber roof covering are given in Table 2.

DESIGN CONDITIONS

The pull-out force F_t must be lower than or equal to the design pull-out force R_d for the clip mounting ($F_t < R_d$)

CLIP SPACING

Clips secured with screws can normally be spaced 330 mm (centres) apart, although a check calculation must be made for clips in boundary zones in locations exposed to wind forces. Particulars of the clip spacing on the various surfaces of the roof must be included in the drawing documentation.

It is always economically and technically justifiable to adjust the clip spacing to suit the wind loads, the fasteners and the roof covering material.

For the conditions specified above, Figure 7 shows suitable spacing of clips, each of which are secured by two screws.

FIGURE 7. AMOUNT OF CLIPS DEPENDING ON THE AREA

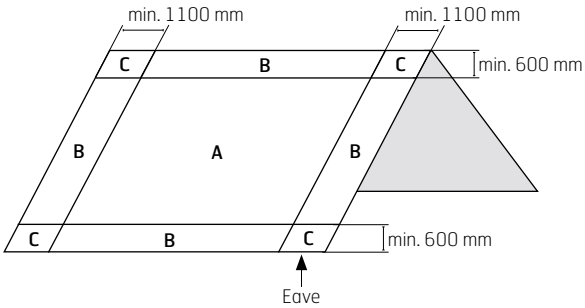

Traditional clips: A= 330 mm B= 200 mm C= 150 mm

TABLE 2. INDICATIVE PULL OUT VALUES OF SINGLE FIXINGS AND MULTIPLE FIXED PULL OUT VALUES FOR CLIPS AND CLEATS

Single fixing type	Size	Substrate type	Pull out value, in Newtons	Pull out value, expansion clip[1]	Pull out value, fixed clip[2]	Pull out value, continous cleat[3]
Stainless steel Annular Ringed Nail	3.35 mm Dia X 25 mm	18 mm WBP Plywood	649 N	1 947 N	1 298 N	4 326 N
		22 mm WBP Plywood	658 N	1 974 N	1 316 N	4 382 N
		22 mm OSB3 Exterior Grade	365 N	1 095 N	730 N	2 431 N
		18 mm Pine soft wood boarding	390 N	1 170 N	780 N	2 597 N
Paslode A2 Stainless steel nail Smooth Shanked Nails	2.8 mm dia X25 mm	18 mm Timber density 350 kg/m³	484 N	1 452 N	968 N	3 223 N
		25 mm Timber density 350 kg/m³	672 N	2 016 N	1 344 N	4 475 N
	2.75 mm XL	25 mm Timber Grade SC3+4	60 N	180 N	120 N	400 N
		30 mm Timber Grade SC3+4	75 N	225 N	150 N	500 N
Stainless Steel Wood Screw fixings BS1210	4.3 mm (No. 8) XL	18 mm WBP Plywood	1 870 N	5 610 N	3 740 N	12 454 N
		12 mm OSB3 Exterior Grade	940 N	2 820 N	1 820 N	6 260 N
		30 mm Timber Grade SC3+4	2 500 N	7 500 N	6 250 N	16 650 N
Stainless Steel Self Tap Flat Head	4.8 mm XL	0.75 mm Steel thickness	1 314 N	3 942 N	2 630 N	8 751 N
		1 mm Steel thickness	1 771 N	5 313 N	3 542 N	11 795 N
Stainless Steel Self Tap C/SK Head	4.5 mm X 18 mm L	0.7 mm Steel thickness	700 N	2 100 N	1 400 N	4 660 N
Foamglas Fixing Plates Embedded		Glue bonded and Embedded insulation	600 N	600 N	600 N	N/A
Foamglas Fixing Plates Embedded centre fixed	4.8 mm dia XL	Glue bonded and embedded with central single through fixing to 18 mm Plywood	1 180 N	1 180 N	1 180 N	N/A
Thermoseam® (Warmroof system)	XL screw	0.7 mm steel profiled sheet	580 N	580 N	580 N	N/A
		Clip failure	656 N	656 N	656 N	N/A

[1] The fixing pull out values for expansion clips is based on 3 fixings. [2] The fixing pull out values for fixed clips is based on 2 fixings. [3] The fixing of a continous cleat has been based on 6.66 fixings per linear metre or at 150 mm centres.

It should be noted that pull out values of fixings will be affected by timber shrinkage due to drying out.

Note: The Indixative Pull Out values given come from variuos sorces and are therefor guidance only and should not be quoted for a particular project.

DETAIL REFERENCES

The numbering of the components on the typical drawings on pages 12–31 has been done in the order that the components are normally fitted.

The notes on the general arrangement drawing below refer to the pages in this Installation guide.

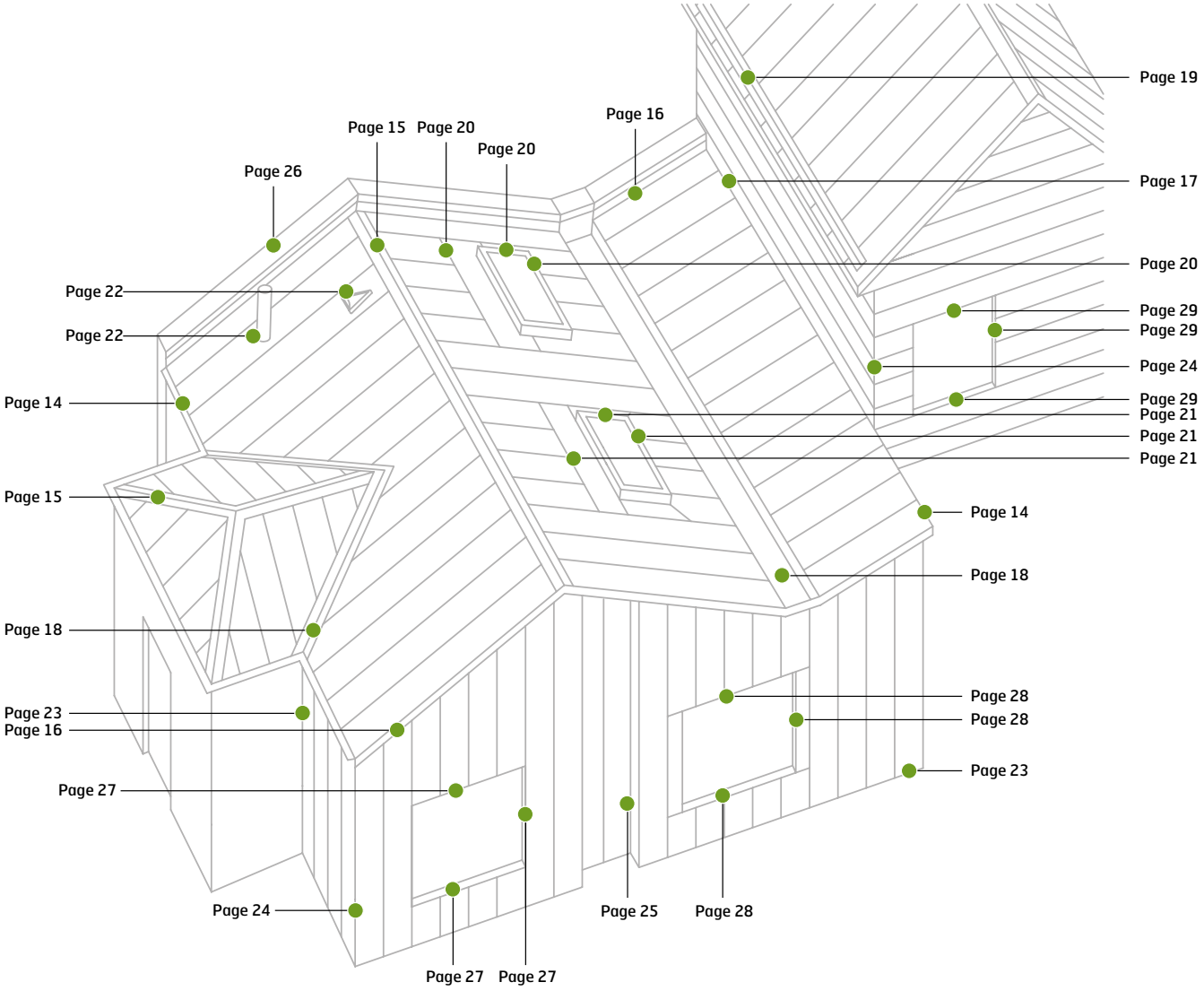

Work procedure for folding

PROFILING

In standing seam systems, the steel sheet strip is worked in two stages, i.e. profiling as shown in the adjacent figure, and seam folding carried out on the roof by means of a special machine.

Regardless of the machines used, it is important to ensure that they are correctly preset, and that they are correctly serviced and maintained. As an example, the infeed tables and setting of the profiling machine must be checked, and the forming rolls must be kept clean to avoid damage to the paint coat on the seam. The dimensions of the seam must also be checked before seam folding is started on the roof. To achieve a good seam, it is important to check two dimensions in particular after profiling as shown in the figure below.

SEAM FOLDING

The profiled tray, having been measured and cut to length to include for any eaves fold and upstand at the ridge can now be laid on the roof. Clips are positioned and fixed in accordance to the preceding table. The second sheet can now be connected, a slight tug will ensure the 5 mm spacing for lateral movement is achieved. A simple closure of the seam at strategic points along the trays length will hold these sheets in place.

In accordance with the previous table ensure all leading edges, particularly on exposed sites, are adequately clipped.

The standing seam can be fully closed by hand or on longer trays by electrical forming machines such as Falz Seamer.

Closing the seam involves a manual first fold crimping of the seam, approx. 300 mm, then attaching the cordless seaming machine which completes the first fold. To make the second fold manually turn the seam, rotate the Falz Seamer tool and attach the machine. Follow the manufacturers advise.

It is important to allow for lateral thermal movement by way of a 5 mm spacing at the base of the completed seam. The seams expansion and free expansion in the clipping assembly is then unhindered.

TOUCH-UP PAINTING

It is always worthwhile to repair any damage which occurs to the coating as soon as possible. Touch-up painting can repair minor damage such as scratches. Suitable touch-up paint that air dries can be applied with a narrow brush. It is important to apply the paint only where it is actually needed since the repair paint can be expected to gradually discolour differently from the paint applied at the factory. Spray-paints must not be used.

- Clean the damaged area using white spirit or cleaning agent as necessary.
- Paint the damaged area, 1 – 2 layers depending on the depth of the damage. If the damage reaches down to the primer coat only, one layer of paint is sufficient. If the damage reaches down to the zinc, apply another layer of paint after the first layer has dried.

*depending on folding machine type.

Seam cross-section

In areas of extreme roof exposure or low roof pitch. Apply seam sealant to all surfaces of the sheet that are in contact with one another. Remove excess seam sealant from the outside of the sheet surface. The seam sealant must make the seam watertight, must be durable, and must be formulated so that it will not attack the colour coating.

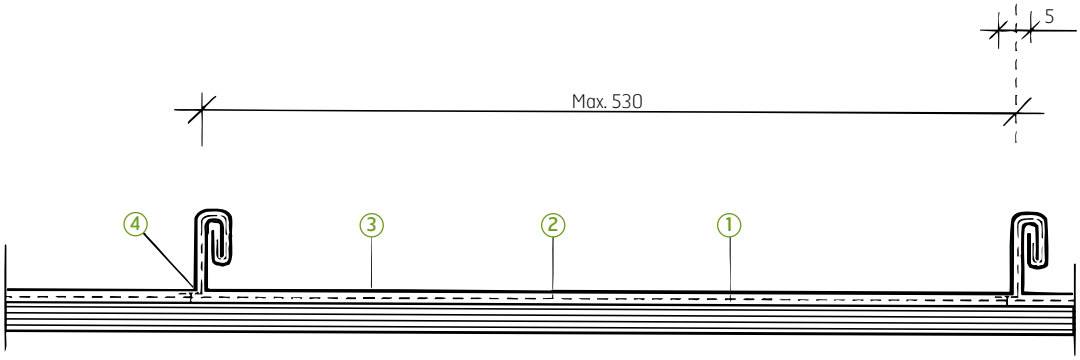

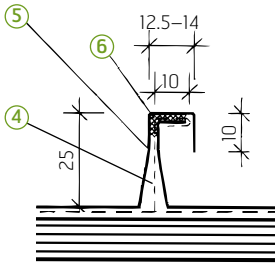

1. Softwood of at least 22 mm thick or minimum 18 mm thick WBP Plywood.
2. Elite 300 Breather Membrane.
3. GreenCoat PLX Metal Roof covering.
4. Clips spaced a normally 330 mm.
5. Seam.
6. ABRA M82 seam sealant.

Eaves, external gutter, apex and mono ridge

In standing seam systems, the strips should be connected to eaves by means of a single eaves fold. The expansion allowance should be sufficient to ensure that the roofing strip will overlap the eaves even at maximum expansion of the strip, and must not be so small that the strip may be damaged when it contracts. See the section entitled temperature movements and strip lengths.The eaves should not be bent downwards, so that the freedom of movement is restricted. At the eaves, the roofing can be connected by a seam as shown in the figure below.

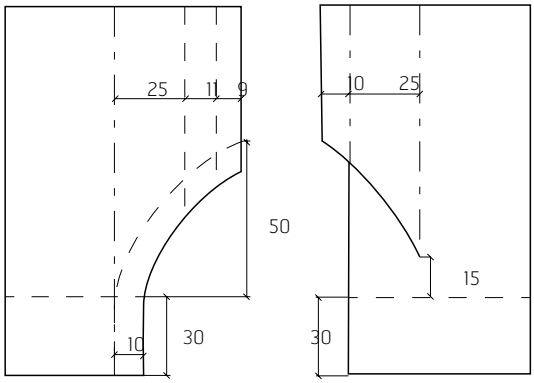

Figure 5.
Developed view of sheet for seam termination.

APEX

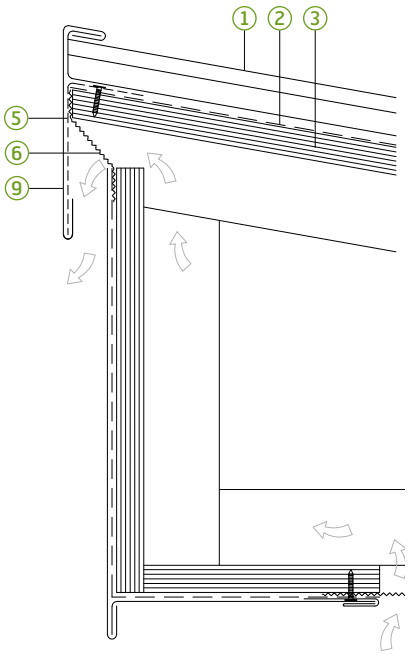

EAVES

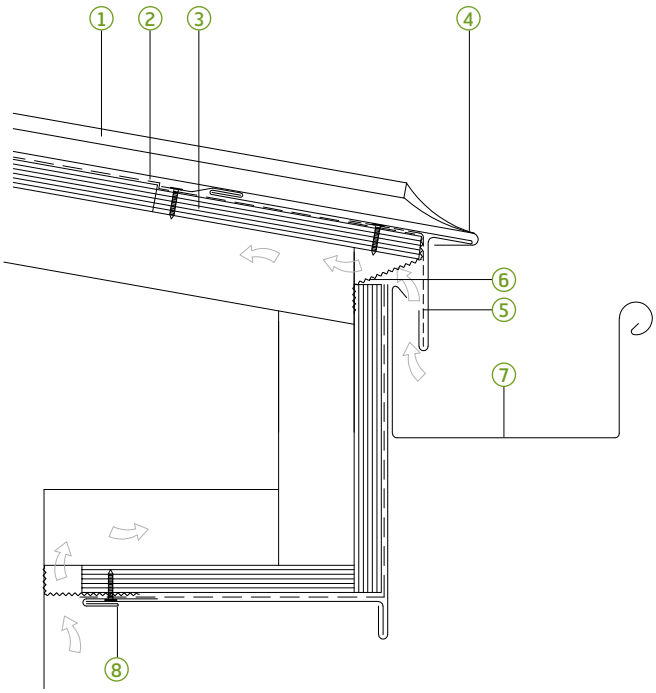

MONO-RIDGE

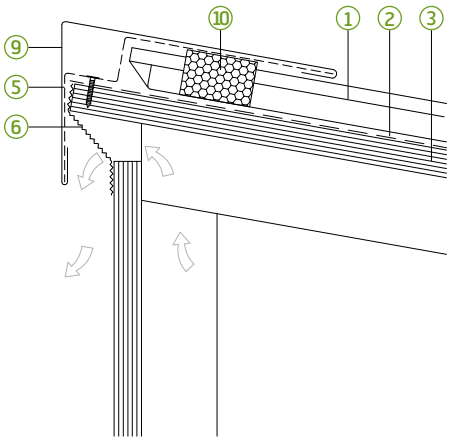

1. GreenCoat PLX.
2. Elite 300 Breather Membrane.
3. 18 mm WBP plywood.
4. Eaves flashing lapped and sealed end to end.
5. Flashing liner.
6. Insect mesh.
7. Typical gutter.
8. Abutment flashing.
9. Apex flashing.
10. Vented foam filler.

Ridge

STANDARD RIDGE

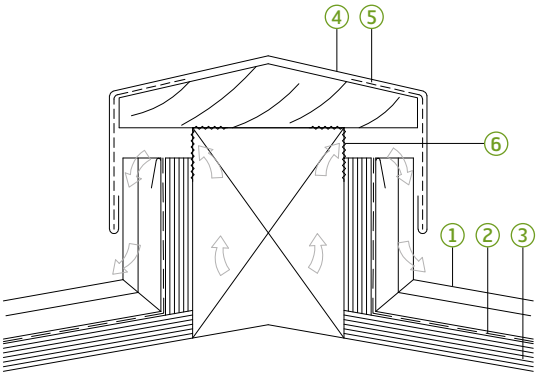

LOW PROFILE RIDGE

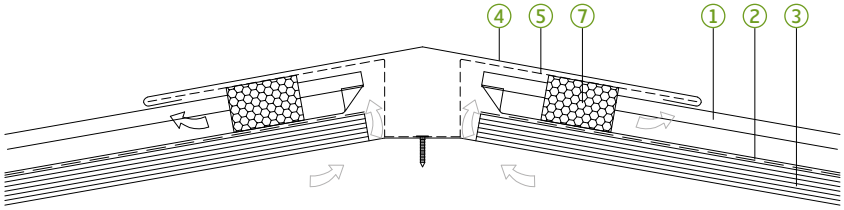

HIP 1

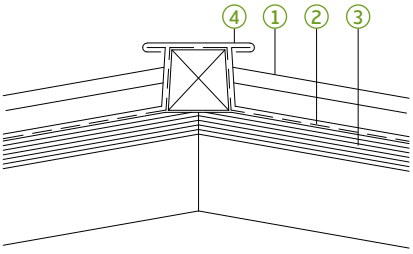

HIP 2

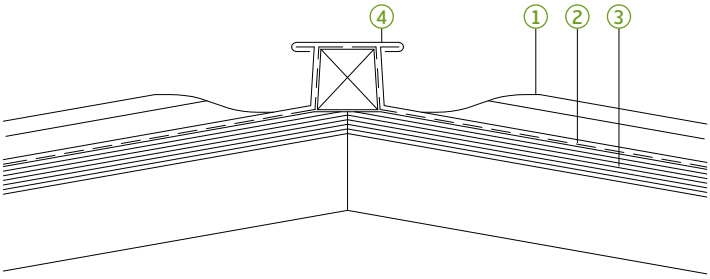

1. GreenCoat PLX.
2. Elite 300 Breather Membrane.
3. 18 mm WBP plywood.
4. Ridge/hip flashing lapped and sealed end to end.
5. Flashing liner.
6. Insect mesh.
7. Vented foam filler.

Verge

The Verge Flashing should be made of short sections not exceeding 2000 mm and can be joined with a single lock welt or with simple lapped joints with 100 mm cover.

SIDE ABUTMENT

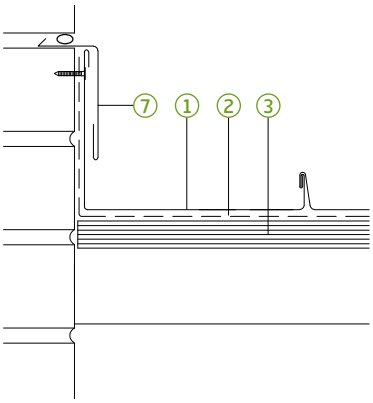

VERGE 1

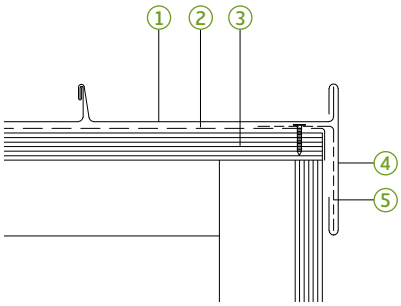

VERGE 2

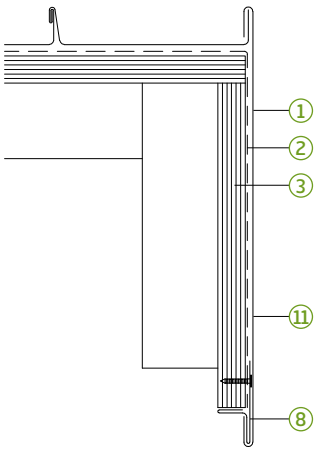

VERGE 3

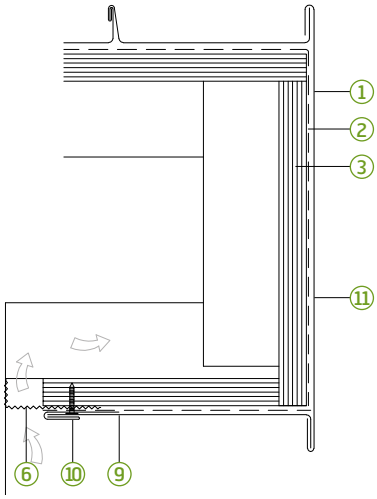

1. GreenCoat PLX.
2. Elite 300 Breather Membrane.
3. 18 mm WBP plywood.
4. Verges flashing lapped and sealed end to end.
5. Flashing liner.
6. Insect mesh.
7. Chase flashing.
8. Drip flashing.
9. Single lock soffit.
10. Abutment flashing.
11. Single lock fascia.

Abutment

STANDARD ABUTMENT

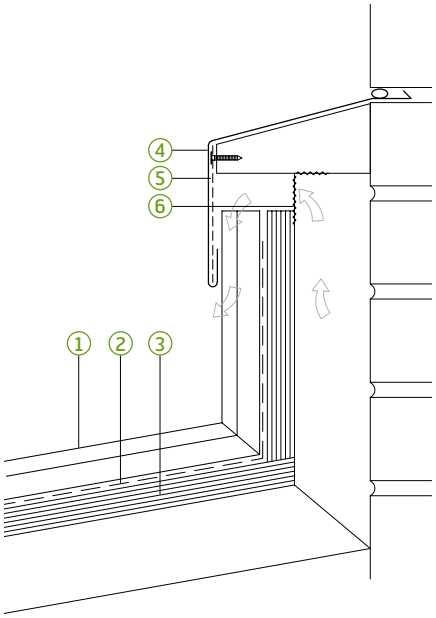

LOW PROFILE ABUTMENT

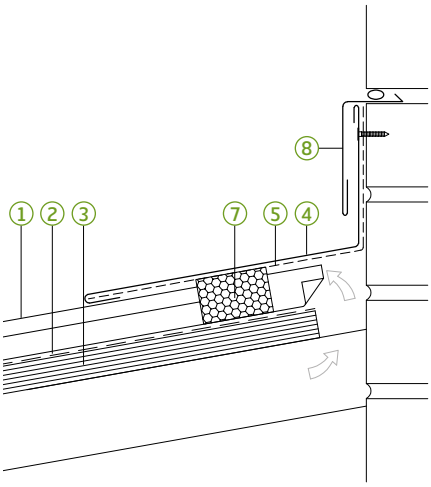

1. GreenCoat PLX.
2. Elite 300 Breather Membrane.
3. 18 mm WBP plywood.
4. Abutment flashing lapped and sealed end to end.
5. Flashing liner.
6. Insect mesh.
7. Vented foam filler.
8. Chase flashing.

Valley

The rainwater outlet is soldered to the valley. The valley is made in sections, each of which must be provided with an overflow. The overflow can also be designed with connection to the nearest drain.

VALLEY BOX GUTTER
Roof slopes below 15° but greater than 3°

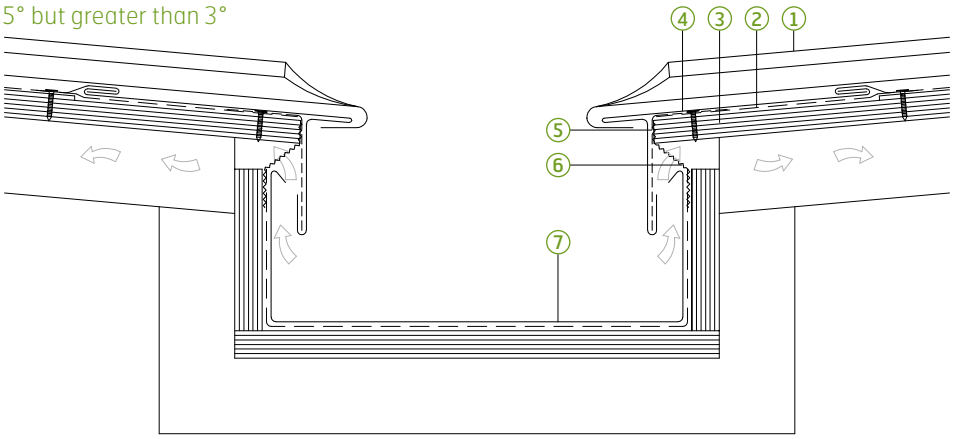

VALLEY
Roof slopes greater than 15 °

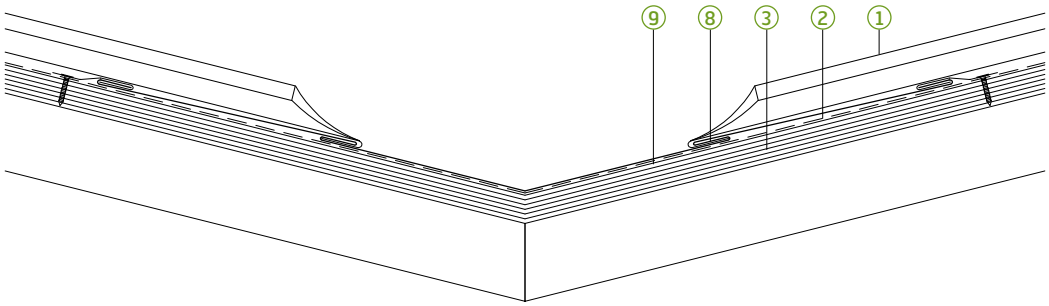

1. GreenCoat PLX.
2. Elite 300 Breather Membrane.
3. 18 mm WBP plywood.
4. Eaves flashing lapped and sealed end to end.
5. Flashing liner.
6. Insect mesh.
7. Valley gutter.
8. Continous fold or soldered liner.
9. Valley flashing.

Secret gutter

SECRET EAVES GUTTER

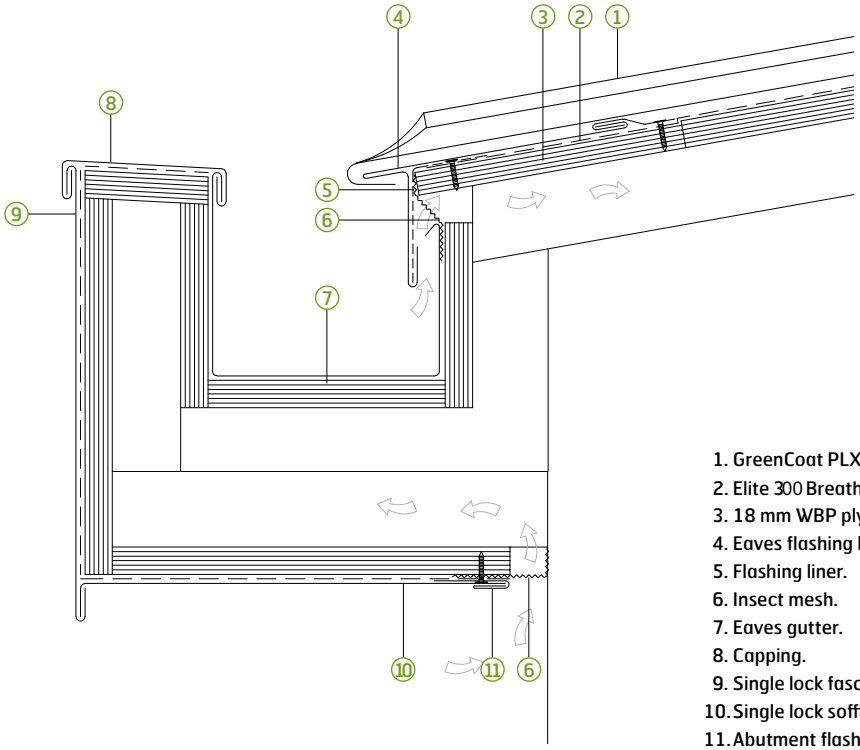

1. GreenCoat PLX.
2. Elite 300 Breather Membrane.
3. 18 mm WBP plywood.
4. Eaves flashing lapped and sealed end to end.
5. Flashing liner.
6. Insect mesh.
7. Eaves gutter.
8. Capping.
9. Single lock fascia.
10. Single lock soffit.
11. Abutment flashing.

Rooflight

ROOFLIGHT DETAIL

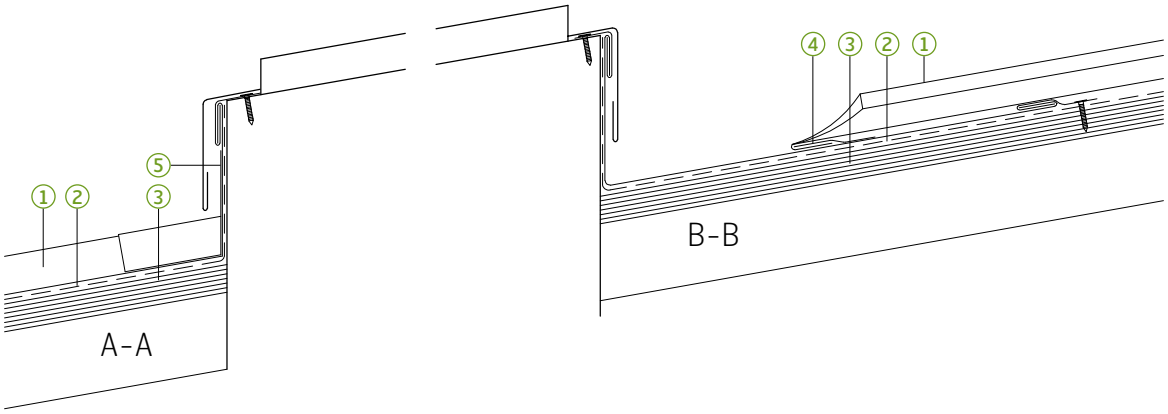

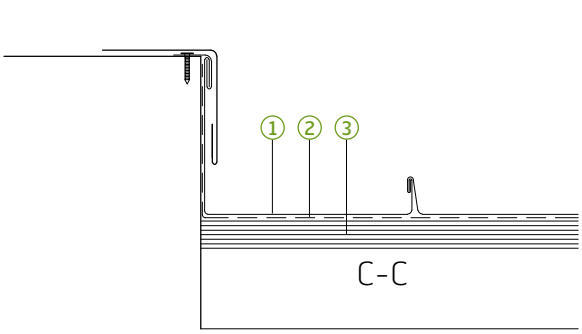

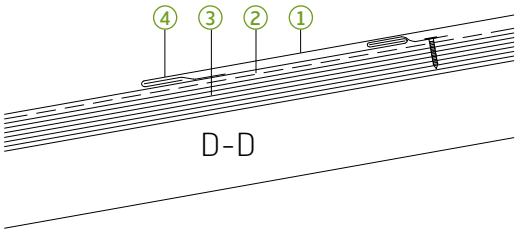

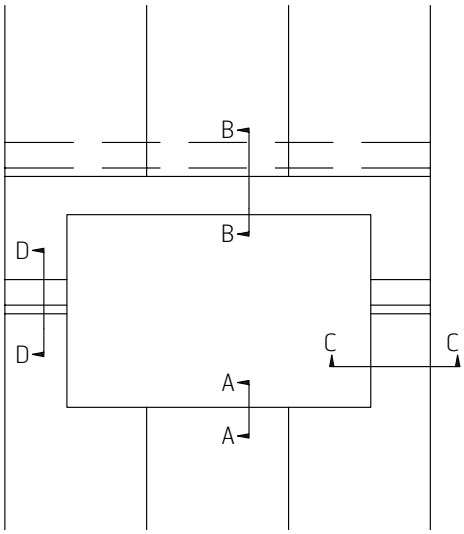

1. GreenCoat PLX.
2. Elite 300 Breather Membrane.
3. 18 mm WBP plywood.
4. Continous fold or soldered liner.
5. Head seam slider (saddle).

Rooflight

ROOFLIGHT DETAIL ABOVE 14°

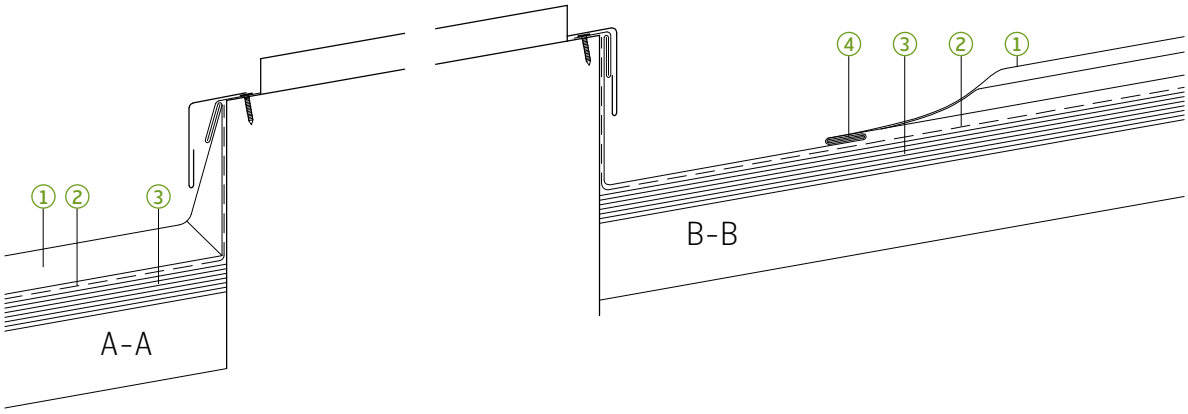

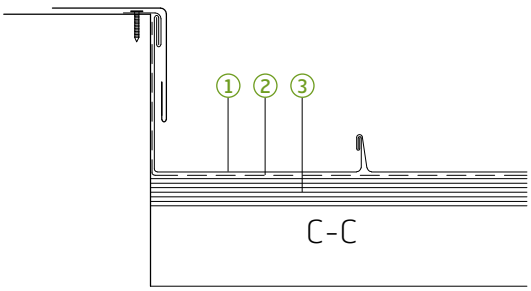

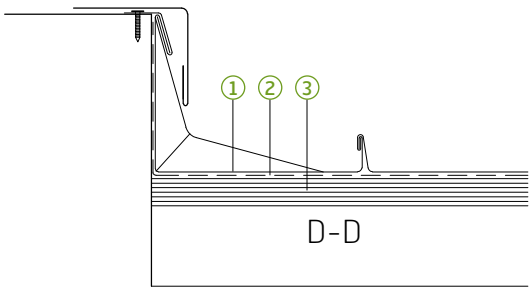

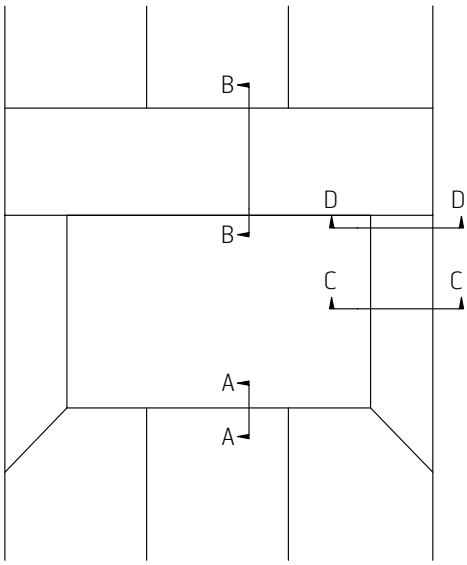

1. GreenCoat PLX.
2. Elite 300 Breather Membrane.
3. 18 mm WBP plywood.
4. Double lock welt.

Small penetrations

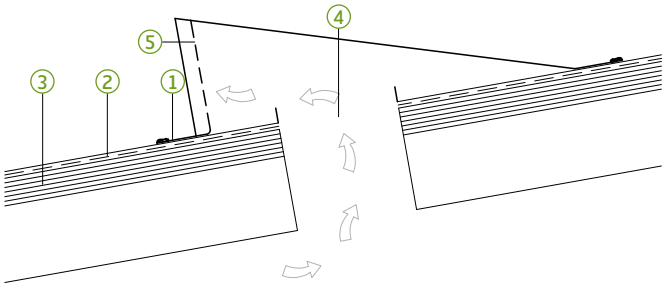

1. GreenCoat PLX sleeve soldered to roof sheets.
2. Elite 300 Breather Membrane.
3. 18 mm WBP plywood.
4. Ventilation opening with upstand.
5. Perforated mesh.

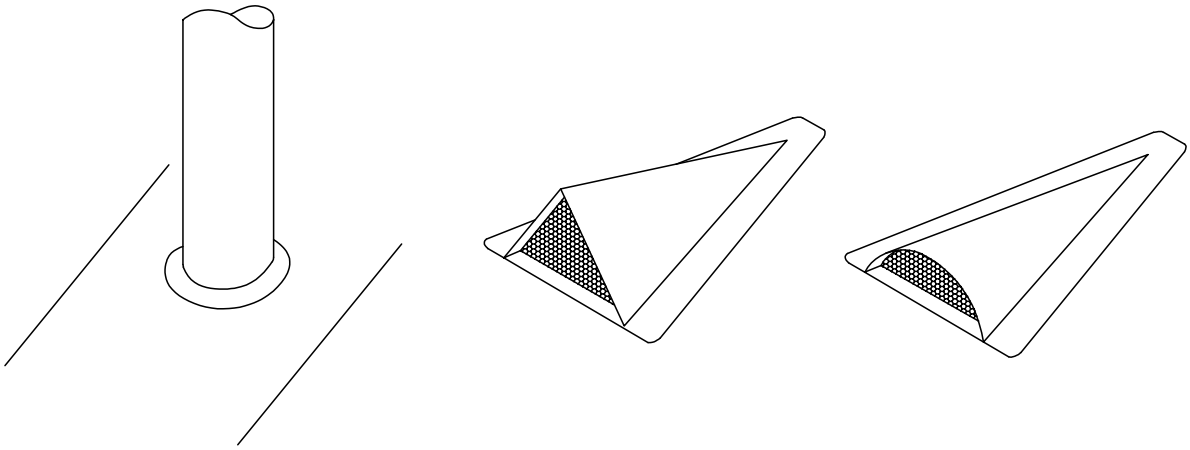

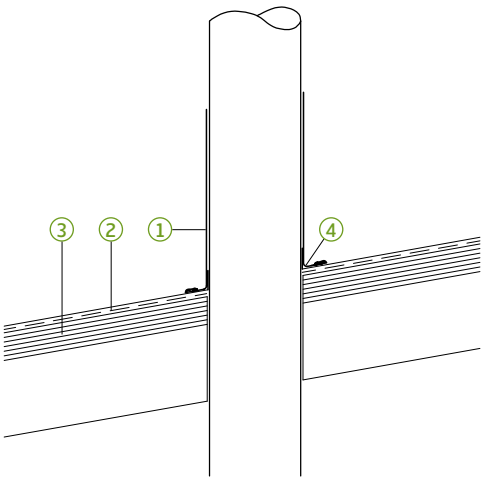

1. GreenCoat PLX sleeve soldered to roof sheets.
2. Elite 300 Breather Membrane.
3. 18 mm WBP plywood.
4. Roof sheets turned up.

Cladding abutment and drip

CLADDING ABUTMENT

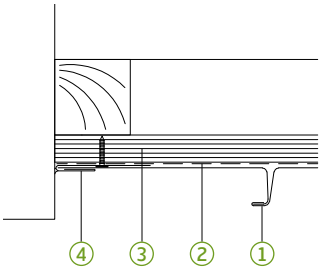

1. GreenCoat PLX vertical angle seam.
2. Elite 300 Breather Membrane.
3. 18 mm WBP plywood.
4. Abutment flashing.

CLADDING BOX ABUTMENT

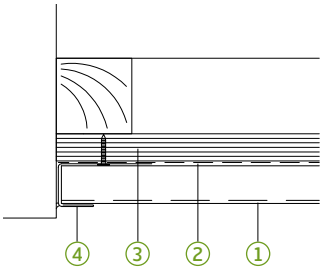

1. GreenCoat PLX horizontal angle seam.
2. Elite 300 Breather Membrane.
3. 18 mm WBP plywood.
4. Box abutment flashing.

CLADDING DRIP

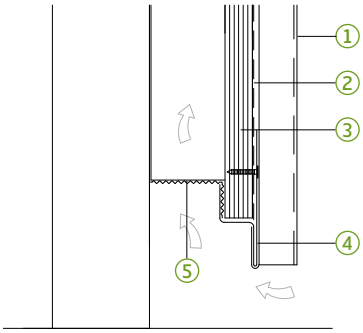

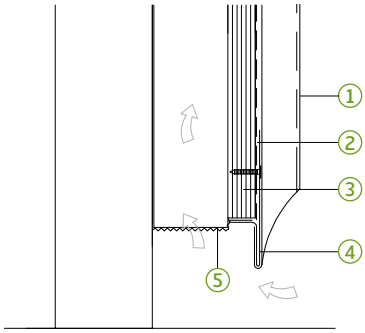

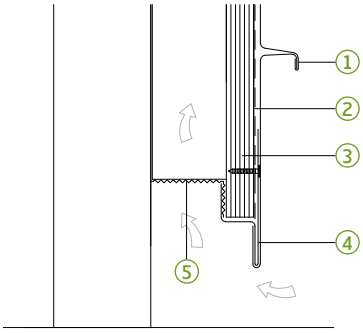

1. GreenCoat PLX vertical angle seam.
2. Elite 300 Breather Membrane.
3. 18 mm WBP plywood.
4. Drip flashing.
5. Insect mesh

Corners

EXTERNAL CORNER

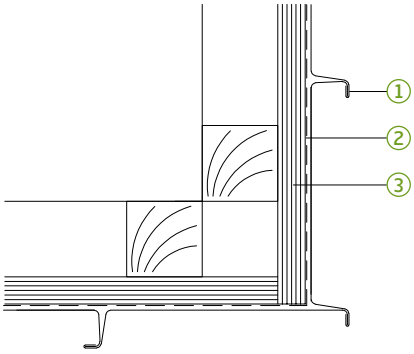

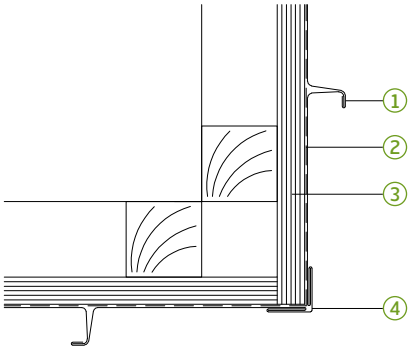

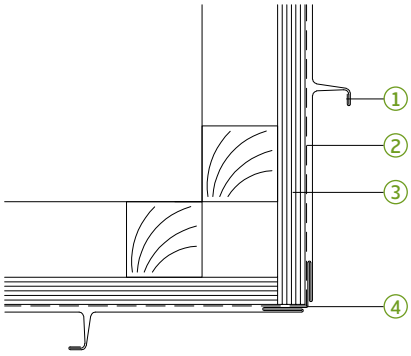

1. GreenCoat PLX vertical angle seam.
2. Elite 300 Breather Membrane.
3. 18 mm WBP plywood.
4. External corner flashing.

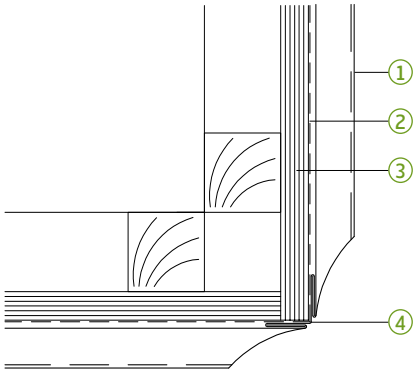

1. GreenCoat PLX horizontal angle seam.
2. Elite 300 Breather Membrane.
3. 18 mm WBP plywood.
4. External corner flashing.

Corners

INTERNAL CORNER

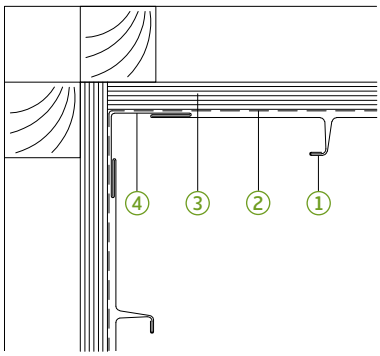

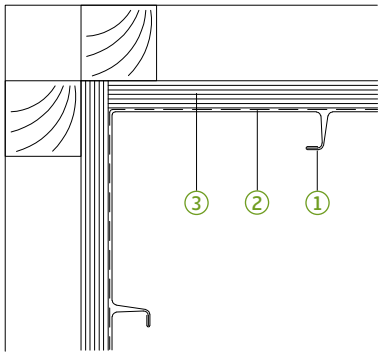

1. GreenCoat PLX vertical angle seam.
2. Elite 300 Breather Membrane.
3. 18 mm WBP plywood.
4. Internal corner flashing.

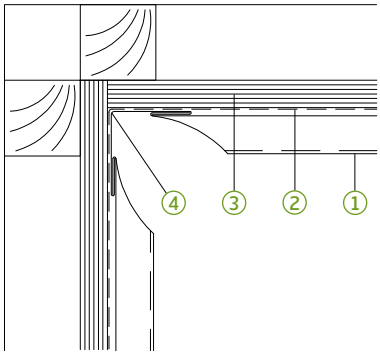

1. GreenCoat PLX horizontal angle seam.
2. Elite 300 Breather Membrane.
3. 18 mm WBP plywood.
4. Internal corner flashing.

Coping

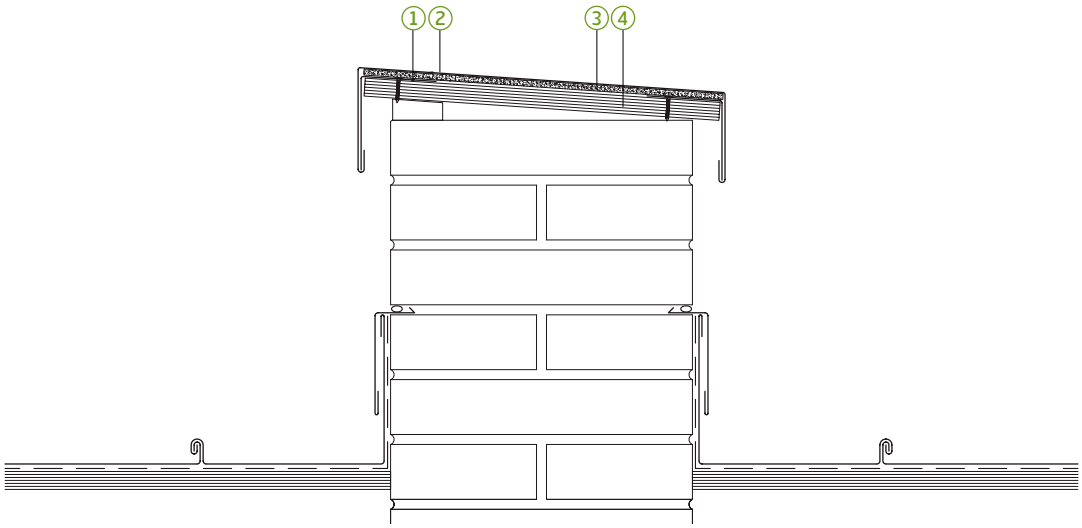

1. Continuous Liner.
2. TopClip Capping in GreenCoat PLX.
3. Structured underlay.
4. Plywood Substrate or similar.

Capping

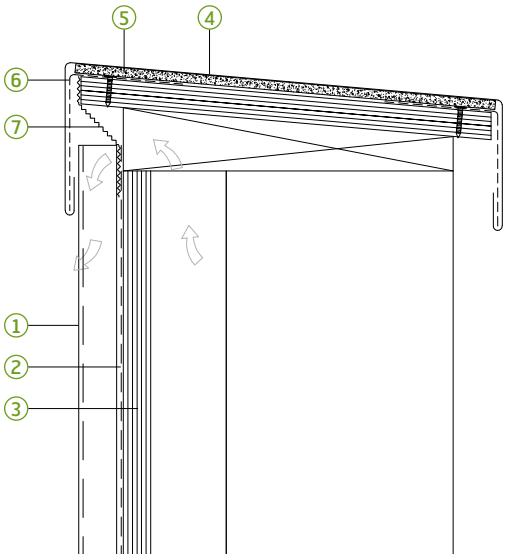

1. GreenCoat PLX vertical angle seam.
2. Elite 300 Breather Membrane.
3. 18 mm WBP plywood.
4. GreenCoat PLX topclip capping.
5. Structured underlay.
6. Capping liner.
7. Insect mesh.

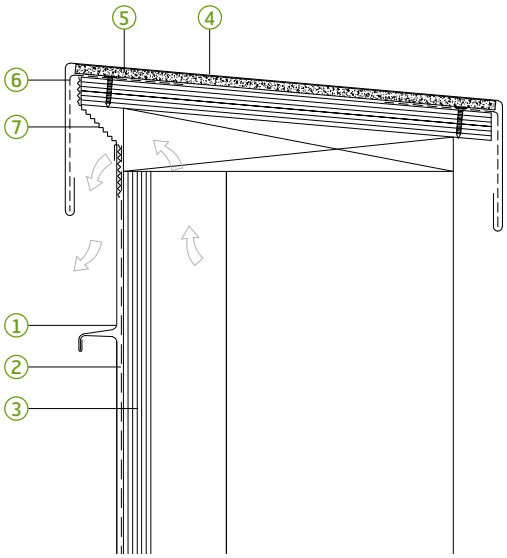

1. GreenCoat PLX horizontal angle seam.
2. Elite 300 Breather Membrane.
3. 18 mm WBP plywood.
4. GreenCoat PLX topclip capping.
5. Structured underlay.
6. Capping liner.
7. Insect mesh.

WINDOW VERTICAL SEAM 1

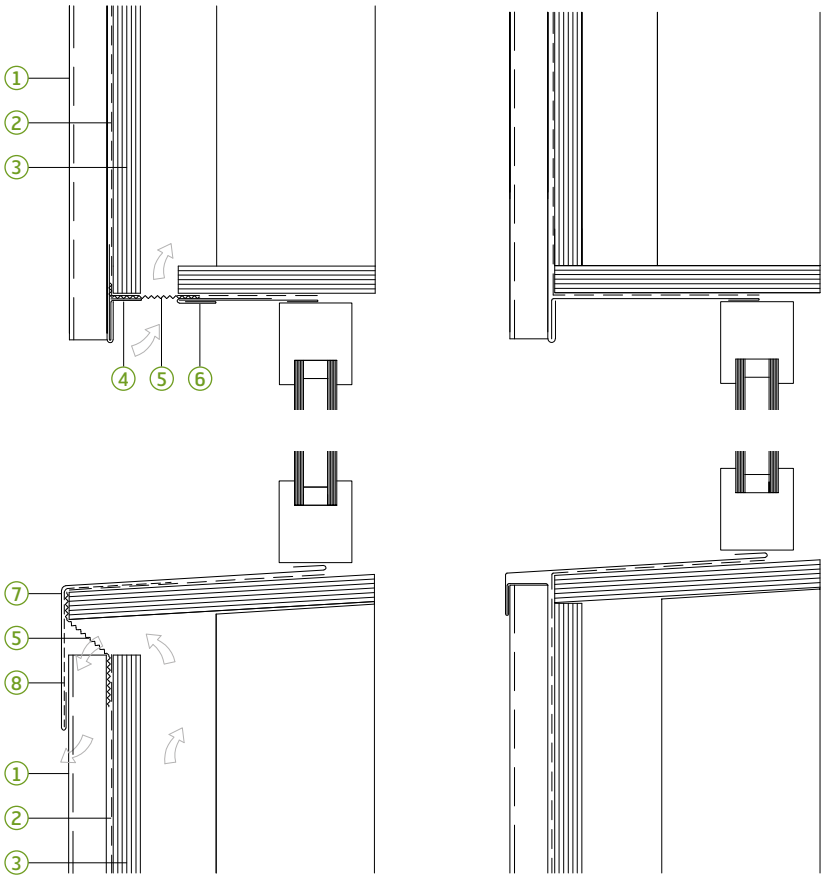

1. GreenCoat PLX vertical angle seam.
2. Elite 300 Breather Membrane.
3. 18 mm WBP plywood.
4. Base flashing.
5. Insect mesh.
6. Abutment clip.
7. Cill flashing.
8. Flashing liner.

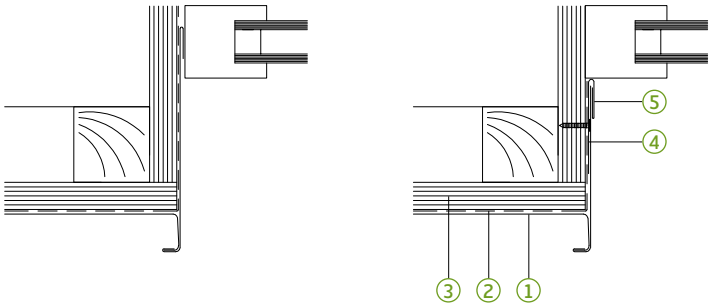

1. GreenCoat PLX vertical angle seam.
2. Elite 300 Breather Membrane.
3. 18 mm WBP plywood.
4. Reveal flashing.
5. Abutment clip.

WINDOW VERTICAL SEAM 2

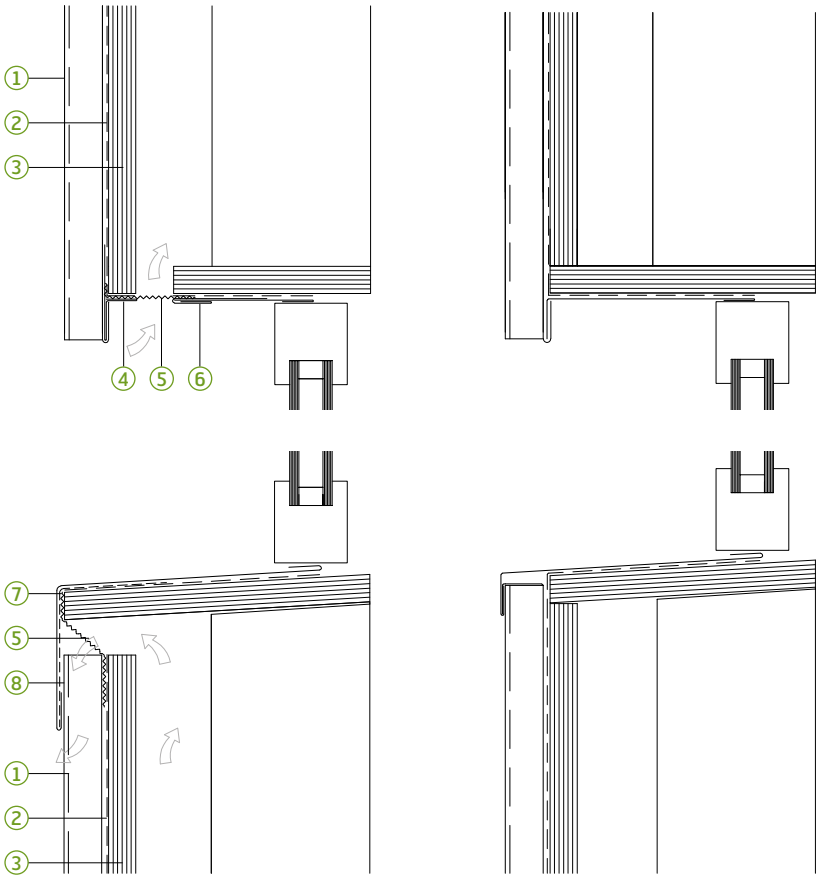

1. GreenCoat PLX vertical angle seam.
2. Elite 300 Breather Membrane.
3. 18 mm WBP plywood.
4. Base flashing.
5. Insect mesh.
6. Abutment clip.
7. Cill flashing.
8. Flashing liner.

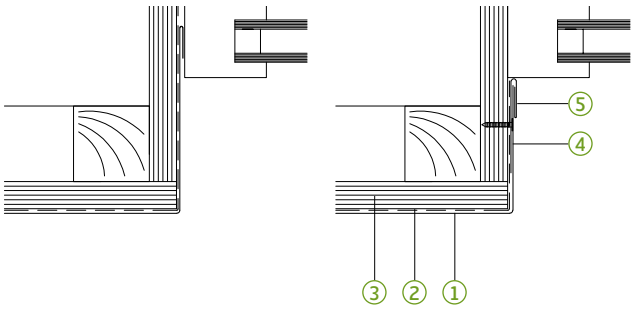

1. GreenCoat PLX vertical angle seam.
2. Elite 300 Breather Membrane.
3. 18 mm WBP plywood.
4. Reveal flashing.
5. Abutment clip.

WINDOW HORIZONTAL SEAM

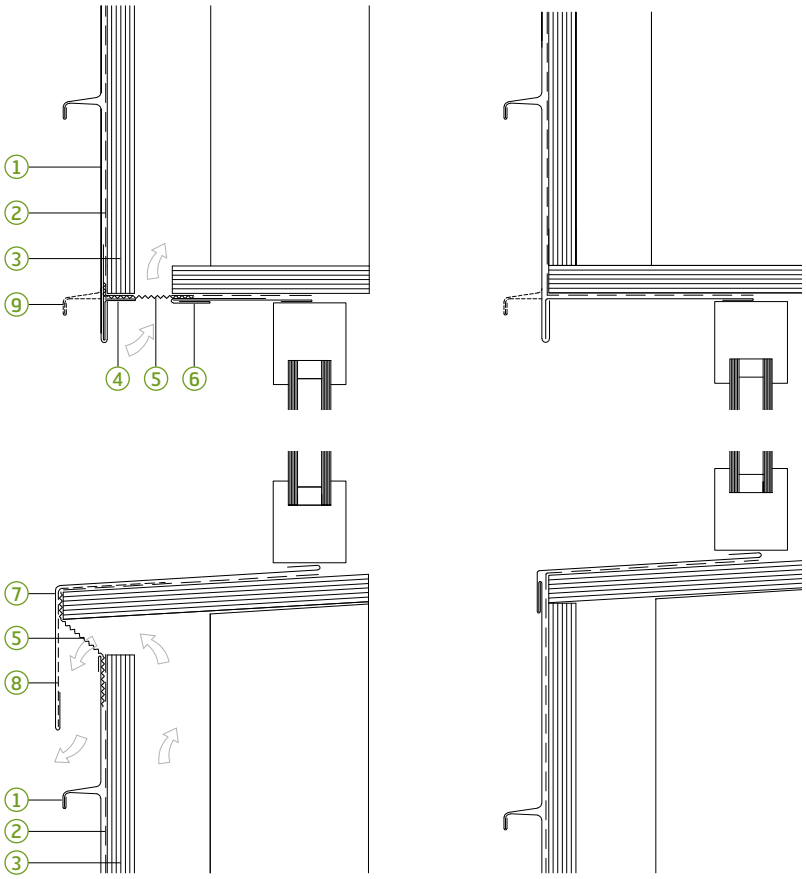

1. GreenCoat PLX horizontal angle seam.
2. Elite 300 Breather Membrane.
3. 18 mm WBP plywood.
4. Base flashing.
5. Insect mesh.
6. Abutment clip.
7. Cill flashing.
8. Flashing liner.
9. Optional seam position according to setting out.

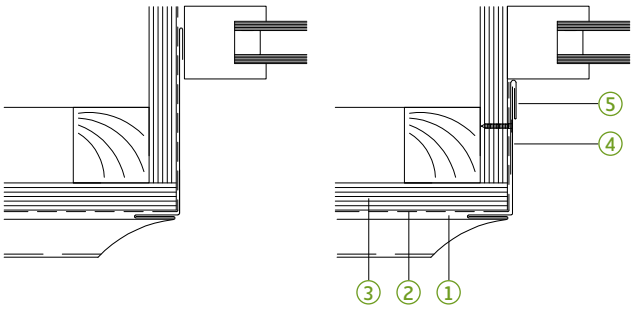

1. GreenCoat PLX vertical angle seam.
2. Elite 300 Breather Membrane.
3. 18 mm WBP plywood.
4. Reveal flashing.
5. Abutment clip.

Roof penetration

The flashing shall be made of the same material as the roofing. Fillets must extend at least 150 mm up on the roof upstand and be folded together with the side fixing strips. Curved seams shall be made in the corners. Expansion allowance must be provided. The connecting seam must not be clipped to the underlying surface.

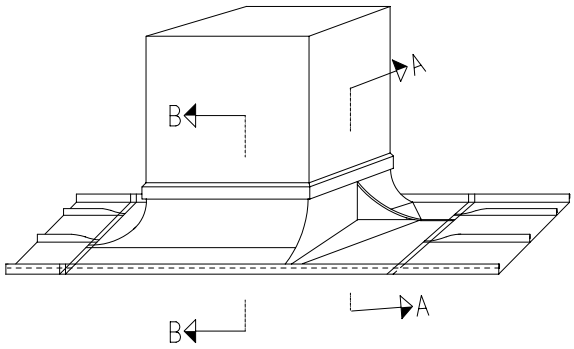

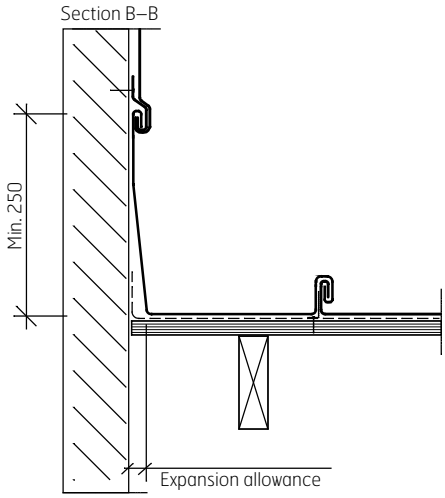

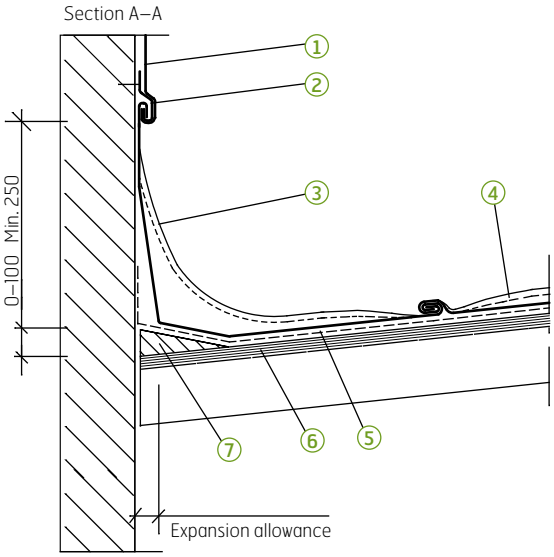

1. Fixing strip, 0.6 mm thick.
2. Clips at 300 mm centres.
3. Fillet, 0.6 mm thick.
4. GreenCoat PLX Metal Roof covering.
5. Elite 300 Breather Membrane.
6. 18 mm WPB Plywood.
7. Wedge-shaped wooden strip for supporting the upstand flashing.

Roof penetration options

OPENING WIDTH LESS THAN ABOUT 1000 MM

In the case of an upstand within two strip widths, the flashing should slope in one direction.

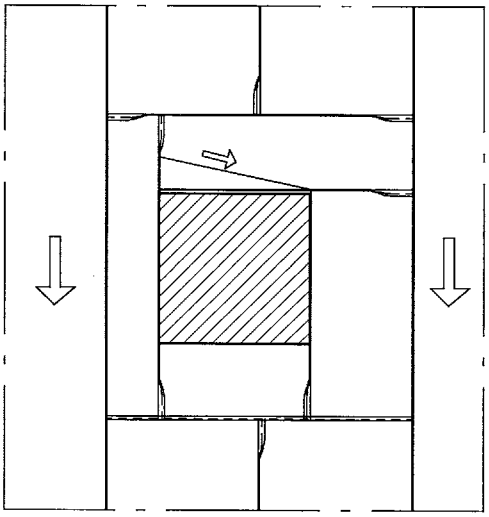

OPENING WIDER THAN ABOUT 1000 MM

In the case of bigger upstands, the flashing should slope in both directions.

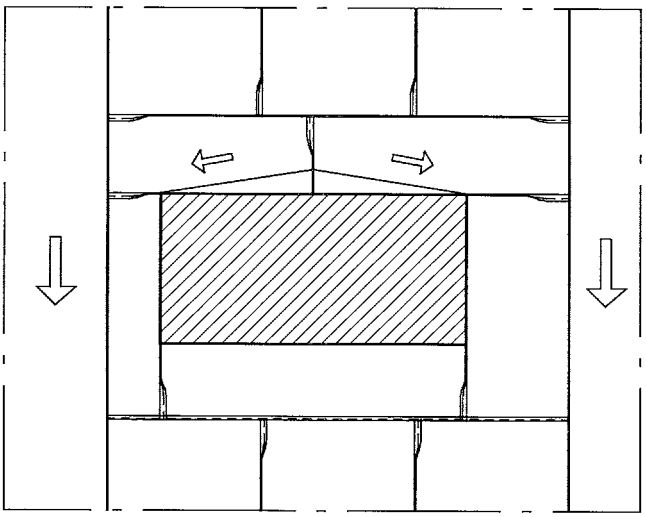

Warm roofs

This installation guide describes standing seam systems with GreenCoat PLX on a base of load-bearing trapezoidal sheet metal and insulation. The directions in this manual are generally applicable. The design schematics, however, are only intended to illustrate common solutions. They must be altered from case to case to adapt to the respective building environments.

The vapour barrier must be a fully supported, self-adhesive, bitumen-backed aluminium foil sealed at the laps, to perimeter abutments and around penetrations. The vapour barrier must have the ability to self-seal when penetrated by through fixings and great care must be taken to ensure that all fixings are correctly positioned and vertically screw fixed. Repositioned fixings will leave punctures in the VB. Contact SSAB/The Metal Roof Company for suitable vapour barriers.

Although popular because of its relative cost effectiveness, the warm roof design is reliant on the competence and attention to detail of the installer. Unless a Composite Panel System with cellular glass insulation is used, there is a risk of failure, most often caused by the vapour barrier not being laid and sealed correctly, thus allowing eventual moisture ingress that has no means of escape and therefore condenses and causing failure of the substrate.

This can particularly be the case with a structural warm roof installed by a general building contractor prior to the specialist metal roof installer's arrival. If a structured warm roof is to be used, then it is recommended it is installed by a metal roofing specialist (member of the FTMRC) who will better appreciate the significance of a installing a fully sealed vapour barrier as part of the warm roof build up.

There are a limited number of warm roof constructions that are approved by manufacturers.

THERMOSEAM® FIXING (RIGID INSULATION – WARM ROOF CONSTRUCTION)

This type of warm roof construction can be used with roof pitches between 3°–70°. The vapour barrier must be fully supported, self-adhesive, backed aluminium foil, sealed at the laps and to perimeter abutments and penetrations. The vapour barrier must have the ability to self-seal when penetrated by tough fixings. The vapour resistance must be a minimum of 4000 MNsg. The insulation must be dense in quality and supportive of foot traffic without denting, with a minimum compression strength of 50 kpa (0.5kg/cm^2) at a maximum 10% deformation and remain dimensionally stable at 100°C.

Approximately 5-6 fixings per m^2 will penetrate the vapour barrier and therefore it is not advisable to use this system for buildings of high humidity for example swimming pools.

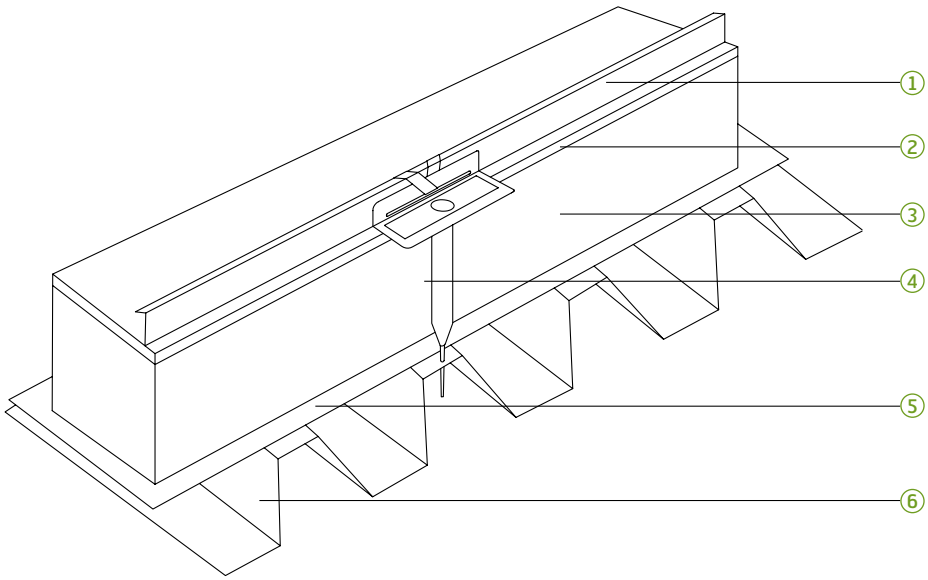

1. GreenCoat PLX standing seam Metal Roof covering.
2. Structured underlay.
3. Dense insulation to required thickness.
4. Thermoseam® fixings including stainless toothed plate and sliding, plastic peg and fixing screw.
5. Suitable heavy duty vapour barrier which allows self sealing of fixings.
6. Support steel or timber decking.

HUMIDITY CLASS 1-4 (DWELLINGS, SPORT HALLS ETC)

There are concerns due to the high number of fixings which penetrate the VB and installers are advised to be aware of the potential risks of latent defects.

If this design of structural roof is used then it would be advisable for a specialist metal roof installer (FTMRC member) to fit the entire substrate because of their greater understanding and appreciation of the significance of a correctly installed build up.

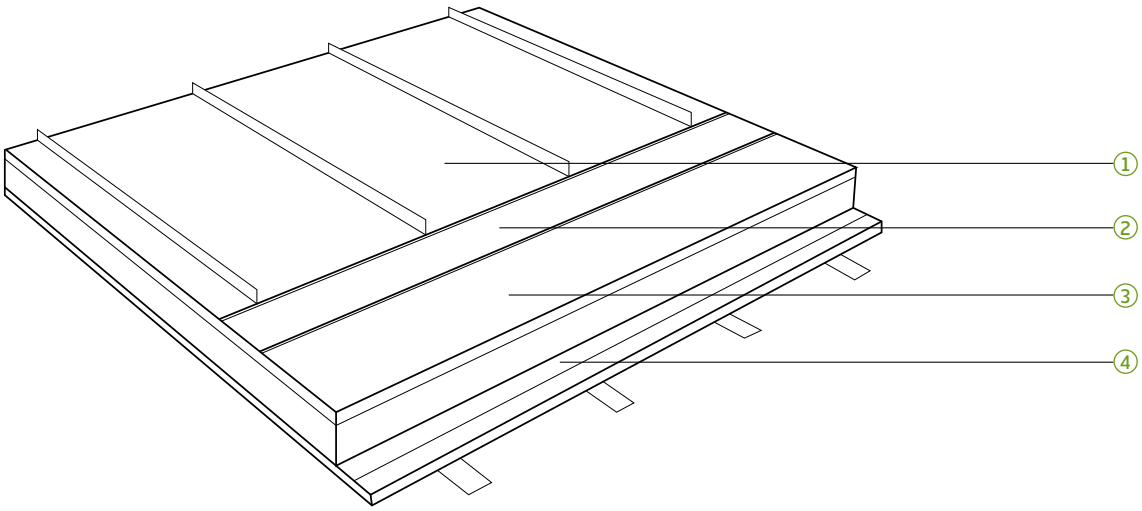

1. GreenCoat PLX Metal Roof covering.
2. Structured underlay.
3. Hard Metal Board.
4. High performance vapour barrier.

STRUCTURAL INSULATION BOARD (WARM ROOF CONSTRUCTION)

The warm roof construction using structural insulation board, Hard Metal Board, has been developed by the manufacturers of a composite roofing board consisting of high performance CFC/HFC-free rigid PUR/PIR foam manufactured to BS EN ISO 13166 or DIN EN 13165. This is factory bonded to 18 mm WBP plywood layer of 22 or 18 mm derived wood panel (OSB3). The insulation boards are laid on a vapour barrier of self-adhesive bitumenbacked aluminium foil sealed at the laps, to perimeter abutments and penetrations. The vapour barrier must have the ability to self-seal when penetrated by through fixings.

The structural insulation board is screw fixed through the vapour barrier into the supporting sub deck metal or timber and the fixings are limited to those used to structurally fix the composite roofing board. Fixings for the metal roofing penetrate the 18 mm plywood upper layer only.

ISO-Mat Metal® underlay is laid over the composite roofing board and then the metal roof is over laid with the clips fixed to the plywood or OSB3 board.

Its is recommended that the product manufacturer provides a technical specification for each individual project where this system is intended to be used.

It is also recommended that during construction, significant care is taken with through fixings and vapour barrier penetrations.

This type of roof substrate construction is suitable for Humidity class 1-4 (dwellings, sport halls etc.) but due to the high number of fixings penetrating the VB and the use of OSB board in some cases, installers must treat this system as high risk of latent defects. If this system is used then it would be advisable for a specialist metal roof installer (FTMRC member) to fit the entire substrate because of their greater understanding and appreciation of the significance of a correctly installed build up.

THE COMPOSITE METAL FACED INSULATED PANEL (WARM ROOF)

The composite panel warm roof is constructed from factory produced interlocking steel or aluminium panels, encasing a ridged closed cell insulation core (PIR). The panels are laid across the roof supporting purlins or rafters.

The interlocking joints must be sealed with gaskets or sealant and taped according to the manufacturer's recommendations, with sealed metal closures to hips ridges, verges, eaves and penetrations. The total roof area and abutments must be sealed air tight.

This type of construction gives a good vapour sealed substrate and can be quickly constructed. It is, however, perhaps best used in large areas of roof with simple profiles, uncomplicated with penetrations or deviations.

Suitable for Humidity class 1-4 (dwellings with high occupancy, sport halls etc.) the construction offers a good economic practical solution for warm roof construction.

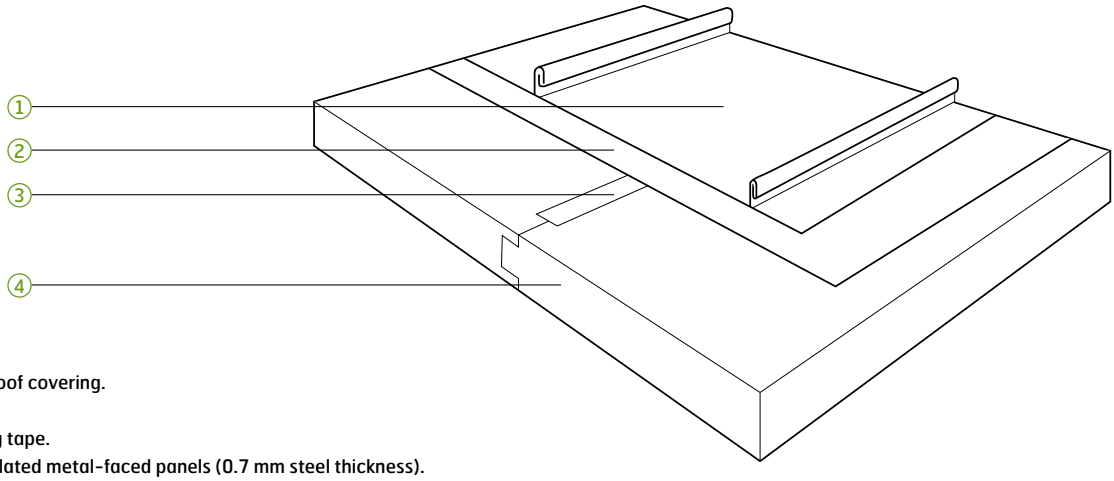

1. GreenCoat PLX Metal Roof covering.
2. Structured underlay.
3. Aluminium faced sealing tape.
4. Sealed Interlocking insulated metal-faced panels (0.7 mm steel thickness).

GreenCoat® in award-winning architecture:
Tin House by Henning Stummel Architects, London

COLOUR NAME: BRICK RED
COLOUR CODE: RR7F2 /SS0742

GreenCoat® reference building: The Tin House

Near the vibrant Shepherds Bush green area of West London, there is a revitalized area of shops, houses, flats and roof terraces, some up to 4 stories in height. Right in the middle of this is a space where award-winning architect Henning Stummel chose to build a home and office building. With an original, contemporary look and an artistic choice of materials, the completed construction dubbed the »Tin House« has been named a finalist for the World Architecture Festival Award 2016 and the RIBA House of the Year 2016 Award. The Tin House is also a winner of the RIBA London Award 2016.

With the objective of creating an environmentally conscious residence that occupies its place among the surrounding buildings with confidence, Stummel used a contemporary design mixed with craftsmanship details. The Tin House maximizes space through six interconnected pyramidal pods where the colour coated steel GreenCoat PLX was chosen as the only material for the entire exterior of the construction, both for the roofs and façades. This gives cohesiveness to the separate, yet con-joined units allowing the project to create a dialogue with the warm, earthy London stock brick that surrounds the site.

For the installation of the exterior, Stummel made use of many traditional tinsmith skills and opted for narrower seam centers of 500 mm as opposed to the more common 600 mm, which worked better with the chosen windows and doors. This, coupled with the use of an angled and 100 percent watertight seam, helped to create the modest and utilitarian finish. Besides being well known among tinsmiths for its easy hand forming, long colour retention as well as resistance to corrosion and scratches, GreenCoat PLX features a bio-based coating with a substantial portion of Swedish rapeseed oil instead of fossil fuel oil. This unique, patented solution by SSAB reduces the environmental footprint of the house significantly.

As a finalist for the World Architecture Festival Award 2016 as well as the RIBA House of the Year 2016 Award, the Tin House has been recognized by architects and builders worldwide in addition to being featured on the UK television program »House of the Year 2016«. RIBA awards and prizes have been honoring the best architecture in the UK and around the world for the past 50 years. The World Architecture Festival (WAF) is the world's largest international gathering of architects.

TIN HOUSE

Project: Devonport Road, London »Tin House«
Product: GreenCoat PLX
Target: Develop a highly artistic, yet functional residence with sustainable properties.
Colour name: Brick Red
Colour code: RR7F2 /SS0742
Architect: Henning Stummel Architects Ltd, London

PHOTOS FJÄRILEN: ÅKE E:SON LINDMAN; COPYRIGHT: SSAB.

GreenCoat® in award-winning architecture:
The Fjärilen (the butterfly) by Belatchew Architects, Stockholm

COLOUR NAME: HARVEST YELLOW
COLOUR CODE: RR24 / SS0189

GreenCoat® reference building: Fjärilen (the butterfly)

The new Rosendal district in the Swedish town of Uppsala consists of buildings with two distinct scales and architectural approaches. On one side of the area are buildings designed with strong urbanism in mind and five or more stories. On the other side are buildings with a significant small-town character. Right in between lies "Fjärilen" (the butterfly), a unique apartment building that acts as an architectural hub by offering details that lend themselves well to both styles.

For its striking, well-composed look and smart use of material, Fjärilen has caught the eye of many in the world of architecture. It has also been shortlisted for the Swedish Steel Building Award 2017 (Stålbyggnadspriset 2017).

To achieve this extraordinary building, the award-winning architect Rahel Belatchew chose to work with details like façade shifts as well as a varied roof. On the façade, a vertical panel design was used. The roof was inspired by traditional Swedish villas with a deep and high vaulted ceiling. The city block around Fjärilen already contains buildings with many different materials and colours. Therefore, Belatchew wanted to create a monochrome effect and limited herself to a single colour and one material on both the roof and façades. In addition, a major goal was to choose building materials that have a low impact on the environment.

A very close dialogue was established between the architect, SSAB and the tinsmith company, Erikssons Plåt & Kopparslageri AB. With the help of many GreenCoat® colour samples, a unique shade of yellow was chosen by Belatchew Arkitekter.

Well-known among tinsmiths and metal roofers for its easy hand forming and long colour retention, GreenCoat PLX also features a bio-based coating with a substantial portion of Swedish rapeseed oil instead of fossil based oils, which are traditionally used. The unique, patented BT solution by SSAB reduces the environmental footprint significantly.

In addition, GreenCoat PLX is highly resistant to corrosion, UV radiation as well as scratches. Installation went smoothly and thanks to the low temperature elongation, the result was a clean look without buckling or deformation.

The bi-annual Stålbyggnadspriset (Swedish Steel Building Award), which Fjärilen has been nominated for, is awarded to a construction project that uses steel in an innovative, sustainable and architecturally appealing way. The aim is to encourage efficient use of steel in construction and give rise to new ideas and inspirational solutions.

FJÄRILEN (THE BUTTERFLY)

Project: Uppsala, Sweden «Fjärilen»
Product: GreenCoat PLX
Target: Develop an apartment building that fulfills both a creative architectural design as well as demanding environmental requirements.
Colour name: Harvest Yellow
Colour code: RR24 / SS0189
Architect: Belatchew Arkitekter AB
Tinsmith: Erikssons plåt & kopparslageri AB

SSAB

SSAB has manufactured products for the building industry for more than 50 years and is the pioneer and innovator of creating sustainable colour coated products offering Swedish rapeseed oil in the coating.

SSAB is a Nordic and US-based steel company offering value added products and services developed in close cooperation with its customers to create a stronger, lighter and more sustainable world. SSAB has production facilities in Sweden, Finland and the US and employees in over 50 countries. **www.ssab.co.uk**

GreenCoat® is available in

bimobject®

SSAB and its subsidiaries have taken care to ensure that the content of this publication is accurate. However, we do not accept responsibility or liability for errors or information that is found to be misleading. Suggestions for, or descriptions of, the end use or application of products or methods of working are for information only. SSAB and its subsidiaries accept no liability in respect thereof.

No part of this publication may be reprinted without explicit written permission by SSAB.

This brochure has been printed by a Nordic Swan Ecolabel certified printing company. This refers to a company that fulfils strict environmental requirements and has been granted a Nordic Ecolabel licence.

MILJÖMÄRKT

Nordic Ecolabel Printed Matter Licence No 341362

SSAB Swedish Steel Ltd
Narrowboat Way
Hurst Business Park
Brierley Hill
West Midlands
DY5 1UF

T 01384 74660
F 01384 77575
greencoat.uk@ssab.com
samples.greencoat@ssab.com

The Metal Roof Company
Access Business Park
145-147 Boston Road
Ealing
W7 3SA

T 020 8810 0120
info@themetalroofcompany.co.uk

SSAB
SE-78184 Borlänge
Sweden

T +46 243 700 00
F +46 243 720 00
greencoat@ssab.com
samples.greencoat@ssab.com

ssab.co.uk/GreenCoat

Follow GreenCoat® on

SSAB

501-en-UK Installation Guide GreenCoat PLX V3–2021. Confetti. Österbergs.