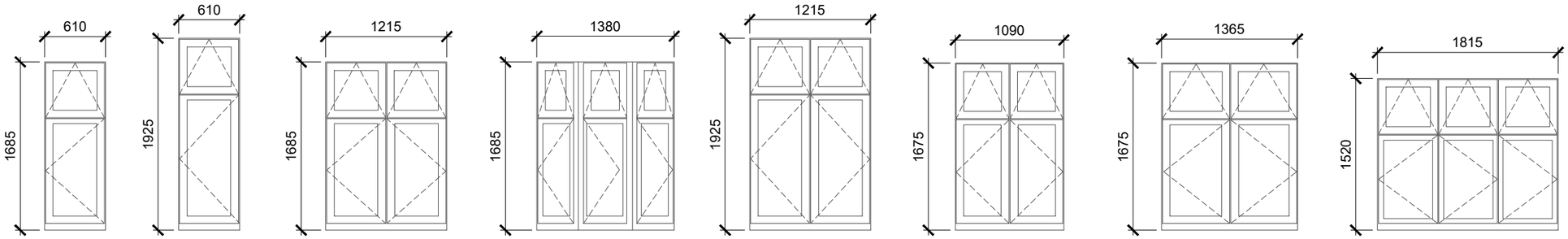

Proposed material: uPVC Glazing: Double	Proposed material: uPVC Glazing: Double	Proposed material: uPVC Glazing: Double	Proposed material: uPVC Glazing: Double	Proposed material: uPVC Glazing: Double	Proposed material: uPVC Glazing: Double	Proposed material: uPVC Glazing: Double	Proposed material: uPVC Glazing: Double
W01	W02	W03	W04	W05	W06	W07	W08
7.no	7.no	1.no	1.no	1.no	2.no	1.no	1.no

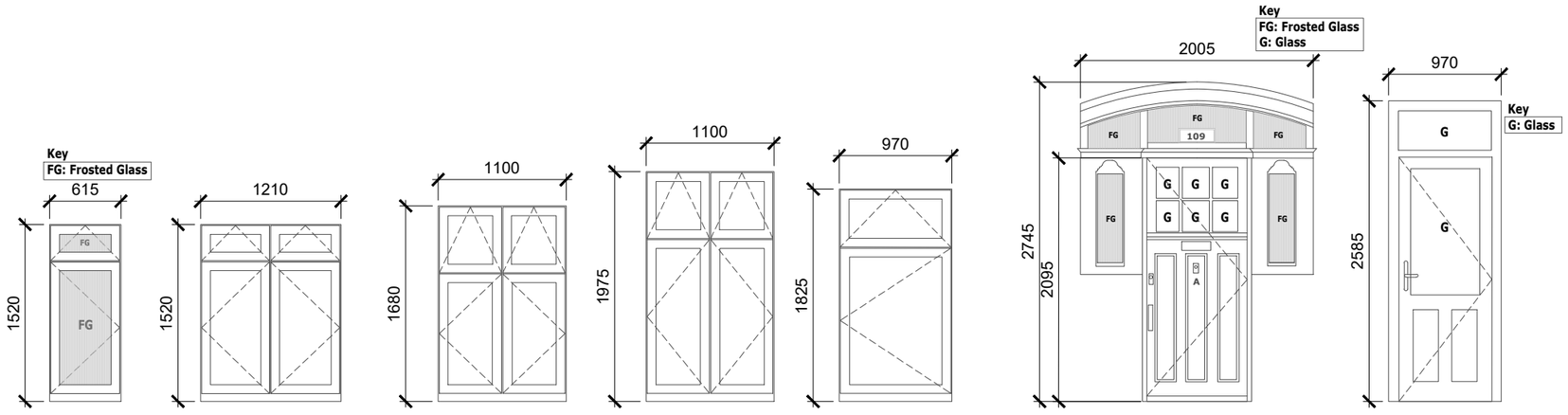

Proposed material: uPVC Glazing: Double	Proposed material: uPVC Glazing: Double	Proposed material: uPVC Glazing: Double	Proposed material: uPVC Glazing: Double	Proposed material: uPVC Glazing: Double	Proposed material: Composite	Proposed material: uPVC
W09	W10	W11	W12	W13	D01	D02
1.no	1.no	3.no	2.no	1.no	1.no	1.no

1 Proposed Window and Door Schedule

Scale:1:50 @ A3

Scale Bar 1:50 0 0.5 1 2.5m

Rev	Description	By	QA	DD.MM.YY
P1	Planning	BP	AS	15.12.25

© This drawing and any design hereon is the copyright of Potter Raper and must not be reproduced without their written consent. All drawings remain the property of Potter Raper. Figured dimension only to be taken from this drawing. All dimensions to be checked on site. Please inform Potter Raper immediately of any discrepancies before work proceeds.

Client
Wates

Project Name
Planning Consultancy 2025-2028

Project Location
109 Mount Pleasant Road, Haringey, London, N17 6TQ

Sheet Name
Proposed Window and Door Schedules

Project Status
Planning

Drawing Nr.
11085-PR-109_MPR-ZZ-DR-A-PL402

Scale
1:50 @ A3

POTTER RAPER
Duncan House
1A Burnhill Road
Beckenham
Kent
BR3 3LA
Tel: 020 8658 3538