ALLTRADE	Client : CR8 Electrical	Project : Lawrence Road	DWG # 3495

Planned optical power levels Max +7dBm Min -12dBm. SAT @ 2150MHz Min off air level 75dBuV : TERR @ 790MHz Min off air level 55dBuV Max 70dBuV

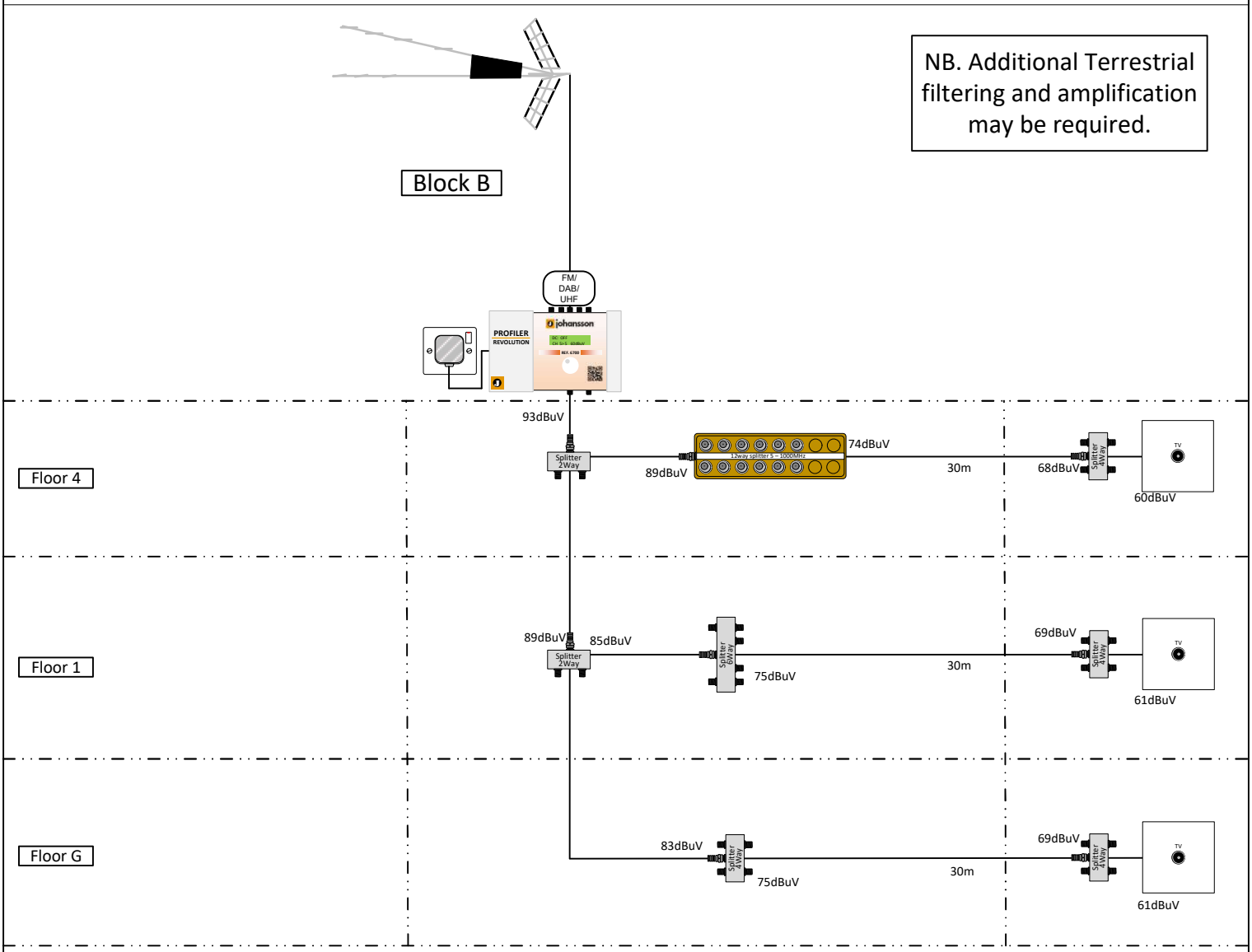

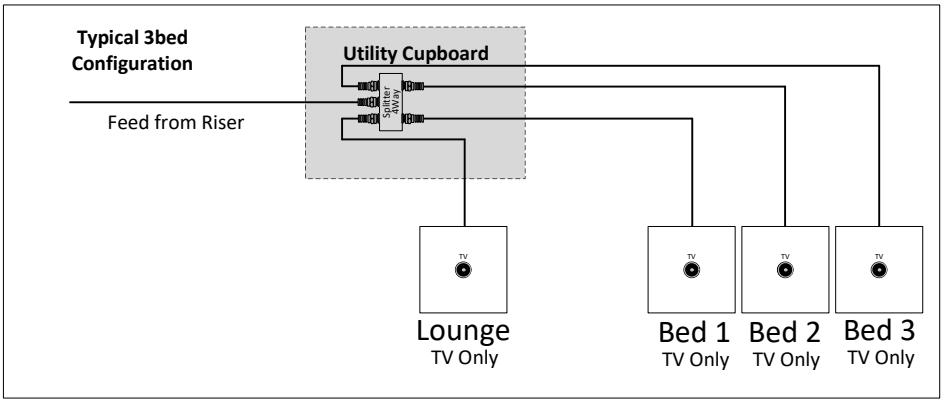

ALL SYSTEMS MUST BE EARTH BONDED - TERMINATE ALL UNUSED OUTLETS
Maximum subscriber cable distance - 50m (unless stated)
DISH ARRAY MUST SIT WITHIN THE BUILDING LIGHTNING PROTECTION ZONE WITH CALCULATED SEPARATION
SPD's (SURGE PROTECTION DEVICES) WILL BE NEEDED IF THIS IS BREACHED

Alltrade Distribution Ltd. Unit 4 Sussex House Business Park, 274 Old Shoreham Road, Hove, BN3 7EU
Tel: +44 (0) 7595 651526 email: irsteam@alltrade.co.uk
This schematic diagram forms no guarantee of operation or function nor does Alltrade Distribution Ltd. Warrant that these diagrams conform to any current legislation, regulations or codes of practice. Alltrade Distribution Ltd. Accepts no liability for the accuracy of the information or the layout or dimensions of any cable length or building or position of any equipment. It is the installers responsibility to ensure that the installation is earth bonded in accordance with current legislation and codes of practice. It is also the installers responsibility to ensure that the equipment installed is suitable for the installation and fitted in accordance with the manufacturers instructions.
Alltrade Distribution Ltd.© 2024 The contents of this document are copyright and copying or any kind of reproduction is forbidden without the prior consent of Alltrade Distribution Ltd.
Drawn by PJ 2024 NOT TO SCALE