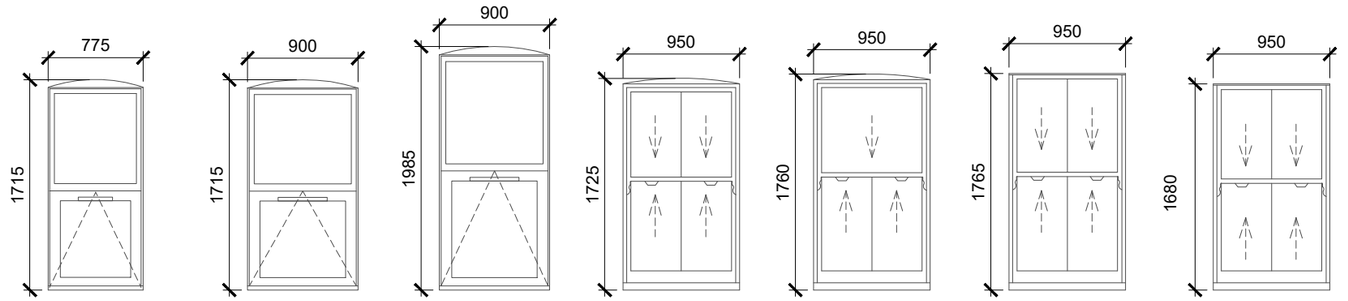


**Existing material: uPVC**
**Glazing: Double**
**W01**
**1.no**

**Existing material: uPVC**
**Glazing: Double**
**W02**
**2.no**

**Existing material: uPVC**
**Glazing: Double**
**W03**
**2.no**

**Existing material: Timber**
**Glazing: Single**
**W04**
**1.no**

**Existing material: Timber**
**Glazing: Single**
**W05**
**1.no**

**Existing material: Timber**
**Glazing: Single**
**W06**
**2.no**

**Existing material: Timber**
**Glazing: Single**
**W07**
**2.no**

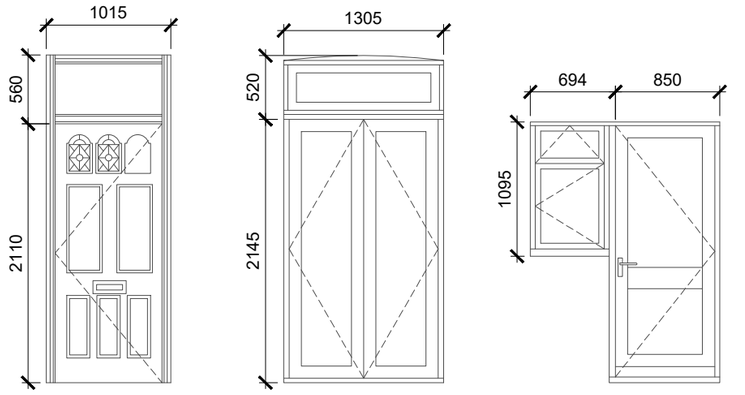


**Existing material: Timber**
**D01**
**1.no**

**Existing material: uPVC**
**D02**
**1.no**

**Existing material: Timber**
**D02**
**1.no**

## 1 Existing Window and Door Schedule

Scale:1:50 @ A3

Scale Bar 1:50

0 0.5 1 2.5m

| Rev | Description | By | QA | DD.MM.YY |
|---|---|---|---|---|
| P1 | Planning | TH | AS | 25.02.2025 |

© This drawing and any design hereon is the copyright of Potter Raper and must not be reproduced without their written consent. All drawings remain the property of Potter Raper. Figured dimension only to be taken from this drawing. All dimensions to be checked on site. Please inform Potter Raper immediately of any discrepancies before work proceeds.

Client
Wates

Project Name
Capital Works 2024-2025

Project Location
250 Philip Lane
Haringey, London
N15 4HJ

Sheet Name
Existing Window and Door Schedule

Project Status
Planning

Drawing Nr.
11085-PR-PL_250-ZZ-DR-A-PL401

Scale
1:50 @ A3

POTTER RAPER
Duncan House
1A Burnhill Road
Beckenham
Kent
BR3 3LA
Tel: 020 8658 3538