VAN DER VALK
SOLAR SYSTEMS

Installation manual

Version: v1.6
Date: 08-09-2025

ValkPro+ L10° South

Disclaimer

This installation manual needs to be stored for future use. For project specific guidelines and recommendations it is required to use this document in conjunction with the "Project report" generated by the ValkPVplanner. The instructions provided in this Project Report must be strictly observed at all times.

The content of this installation manual has been carefully compiled. Van der Valk Solar Systems does not accept any liability for the correct use of this document. Van der Valk Solar Systems hold the right to update the content of this document without further notice. Please check the website of Van der Valk Solar Systems (www.valksolarsystems.com) for the most recent version of this document.

For the warranty conditions of your installation, please contact your supplier. Further we refer to our General Terms and Conditions, that are available upon request.

General installation guidelines

General

- During installation of the solar mounting system, the instructions and safety precautions presented in this installation manual must be followed carefully. As also stated in the General terms and Conditions of sale and delivery of Van der Valk Solar Systems B.V., non-compliance with the installation guidelines in this document means that the customer can no longer invoke any warranty and Van der Valk is no longer liable for any form of damage.
- The information, comments and advice in this document are binding. Van der Valk Solar Systems reserves the right to update this document without further notice.

Safety

- The installation of the mounting system must be carried out by qualified technical personnel.
- Omitting parts may negatively affect performance and is therefore not allowed.
- During the planning and execution of the installation, always take into account possible changing weather conditions, in particular strong winds or storms. Take the right measures and make sure that no situation can occur where solar panels have already been placed on the system, but other critical parts (such as ballast tiles, side or back plates) are still missing.
- Avoid carrying out installation work during bad weather conditions, especially in case of strong winds and a wet (slippery) roof surface.
- During installation work on the roof, always use fall protection and, if necessary, work with safety nets and roof edge protection.
- Always wear appropriate protective clothing and gloves when carrying out the installation work.
- Follow the guidelines in the publication "Health & safety in roof work".

Environmental factors

- High neighbouring buildings or objects, such as windmills, can affect the wind pressure. In these cases, advice should always be obtained from Van der Valk Solar Systems before installation can take place.
- If during the installation it is determined that the project data and/or environmental factors do not fully correspond to the project report, the project must always be re-calculated first.
- In coastal areas, the system should be placed at least 500 meters from open water to prevent accelerated corrosion by the action of salt water. When buildings are present between the open water and the roof, a minimum distance of 250 meters from open water may be maintained.

Standards and regulations

- For correct and safe installation and use of the solar mounting system, always observe the applicable standards and regulations:
  - EN 1990: Basis of structural design
  - EN 1991-1-3: General actions: snow loads
  - EN 1991-1-4: General actions: wind loads
  - IEC 60364: Electrical Installations for Buildings
  - IEC 62305: Protection against Lightning
  - EN 50110: Operation of electrical installations
  - Working Conditions Act and Safe Working Conditions Regulation

Stability and condition of the roof and roof covering

- The roof pitch should be less than 5 degrees for flat roof systems and between 5 degrees to 75 degrees for pitched roof systems.
- The condition of the roof must be checked upfront for sufficient strength to bear the weight of the mounting system including PV panels ballast and wind and snow loads. Make sure that the load reserve of the roof is not exceeded anywhere.
- Check the stability of the roof and adjust the roof/construction where necessary.
- Check prior to installation whether the roof covering and/or insulation is suitable for the pressure and thermal expansion of the solar mounting system. The maximum pressure is shown in the project report of the ValkPVplanner or can be requested at Van der Valk Solar Systems.
- Bulging of the roof membrane should be prevented. This can lift the solar mounting system and can cause displacement of the mounting system or ballast. It is the installer's responsibility to prevent the roof membrane from bulging.
- Factors such as overhead cranes, seismic activity and others that affect the stability of the roof and/or building can affect the installed solar mounting system. Van der Valk Solar Systems does not take these factors into account, unless confirmed in writing.
- The roof surface on which the solar mounting system is to be installed must be clean, dry and flat.
- The roof height may not exceed 25 meters in case the project has been calculated in the ValkPVplanner must be corresponding to the roof height in the project report. For installations on roofs higher than 25 meters, Van der Valk Solar Systems should always be contacted in advance.

Roof zones

- When installing the solar mounting system, always take the applicable roof zones according to EN1991-1-4 into account. Placing solar panels in the edge zone of the roof (the distance measured from the roof edge, which is equal to 1/5 of the building height) is only possible if this has been explicitly taken into account in the calculation.
- It is possible to position panels in the edge zone of the roof in the ValkPVplanner (calculation software), on the basis of which the required additional ballast or fixation points are automatically calculated. This can only be done using "Satellite" or "White Map" design mode. The edge zone is automatically calculated by the ValkPVplanner, based on the roof height and building circumference, in accordance with the applicable regulations. In case the design mode "Simple mode" is used, the calculation always assumes that the solar panels are in the middle zone of the roof only.
- In case solar panels on the ValkPro+ system are fully or partially placed in the edge zone of the roof, it is mandatory to use side plates.

Dilatations

- The maximum allowed dimensions of a coupled mounting system is a 30 meters in the aluminium direction and 60 meters in the steel direction. The maximum dimensions are based on the thermal expansion in case of a maximum temperature difference (Delta T) of 70 degrees Celsius.
- The coupled mounting system must not be placed over a gutter or ridge. In case the mounting system is place over a gutter or ridge, the system must be split (dilatation).
- When using the extra wide panel support feet for ValkPro+ with ballast, different dilatation rules apply: in such installations the coupled system may be a maximum of 30 meters in the steel/roof carrier direction and 15 meters in the aluminium direction.

Solar panels

- It is the responsibility of the installer to determine in advance whether the selected solar panel is suitable for the mounting system in terms of dimensions and pressure loads. The calculated loads on the solar panel are shown in the project report of the ValkPVplanner or are available on request at Van der Valk Solar Systems.

Cable management

- In order to create a sound and durable electrical connection between the solar panels, it must be ensured that the cables from the junction box have sufficient length and thus do not cause any mechanical stress on the cable glands. Take into account thermal expansion and contraction of cables and the mounting system.
- Cables and connectors must be kept away from sharp and/or abrasive parts and the roof surface. Use sufficient cable and connector clamps and cable baskets.

Disassembly and Removal

- Components of the solar mounting system can be easily and completely disassembled at the end of their service life and separated for recycling. The systems only contain nut and bolt, screw and click connections, so no parts are glued or welded. All materials can be recycled. Disposal of the components always in accordance with the locally applicable laws and regulations.

Table of contents:

Disclaimer and General Installation Guidelines	Page 1-3
Table of contents	Page 4
System details	
Placement conditions	Page 5
Recommended tools	Page 6
Required components	Page 7-9
ValkPro+ L10 [South] installation	
Pre-assembly of roof carriers sets	Page 10
Alignment of roof carriers	Page 11-12
Placing ballast	Page 13-18
Side plates	Page 19
Placing solar panels	Page 20-21
Back plates	Page 22
Mounting micro invertor clamps	Page 23
Dilatations	Page 24
Cable management	Page 25-27
Installation recommendations for large projects	Page 28
Installing ValkPro+ on other roof types and ground	
Gravel roofs	Page 29
Sedum/Green roofs	Page 30
ValkPro+ as a field system	Page 31
Console fixation (ValkSolarFix)	Page 32-35
Roofs with Lightning Protection System (LPS)	Page 36-39
Inspection and maintenance of ValkPro+	Page 40

Placement conditions

In order to ensure a safe installation and use of the The ValkPro+ system, the following conditions must be respected:

- The inclination of the roof must be less than 5°.

- The roof can have a maximum height of 25 meters, in case the project has been calculated using the ValkPVplanner and must correspond with the roof height in the project report. For installations on roofs higher than 25 meters, please contact Van der Valk Solar Systems.

- Check prior to installation if the roof membrane and/or insulation is suitable for the loads and thermal expansion of the PV-system. For example: make sure the maximum point loads of the system as shown in the ValkPVplanner project report are compatible.

- In case the mounting system is to be placed on a roof with mechanically fixed roof membrane, the risk of the membrane bulging due to wind suction needs to be mitigated. The bulging can cause unwanted lifting of the mounting system or disposition of the ballast under extreme wind suction situations. It is the responsibility of the installer to prevent bulging of the roof membrane. This can be done by adding fixation points or placing additional weight (for example tiles) on the membrane in the edge zones of the roof and around the PV-system.

- After the ValkPro+ mounting system has been placed, it is of greatest importance to check if the ballast has been placed according to the ballast plan in the project report. Ballast tiles need to be neatly stacked in order to ensure the weight is properly supported by the tile carriers, ballast carriers and/or ballast wings.

- The coupled ValkPro+ system shall not be placed over a ridge or gutter. In these positions a dilatation is mandatory.

- Side plates are mandatory when the system is placed in the edge / corner zones of the roof.

- In coastal areas the mounting system must be placed at a distance of at least 500 meters from open water, to prevent corrosion due to salt water spray. In case there is a building in between the open water and the roof, a distance of 250 meters can be applied.

Suitable panel dimensions:

• Length	1520 - 2320 mm	
• Width	977 - 1350 mm	suitable for pitch 1300 mm
	977 - 1350 mm	suitable for pitch 1400 mm
	977 - 1350 mm	suitable for pitch 1500 mm
	977 - 1350 mm	suitable for pitch 1600 mm
• Frame height	28 - 50 mm	

Required tools for installing ValkPro+

Cordless drill

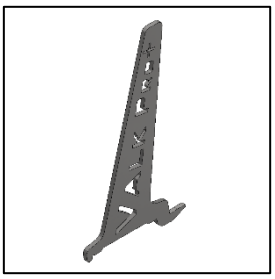

Disassembly key for feet

743000

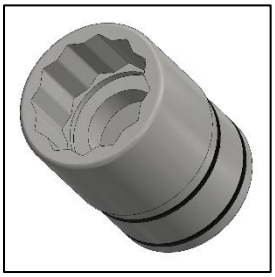

Socket 13mm

Wrench 13mm

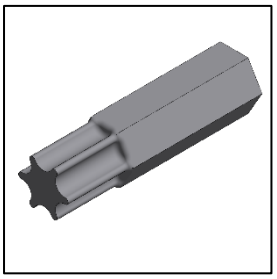

Torx bit T-30
789530

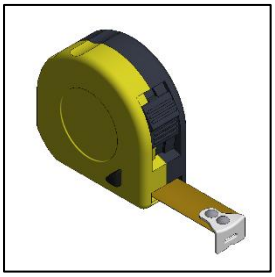

Measuring tape

Alignment key for roof carriers

739010

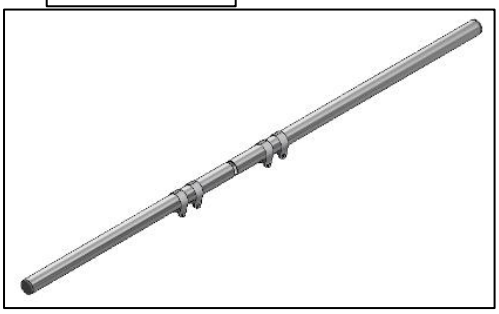

Adjustable alignment set for roof carriers

743220

Basic components for installing ValkPro+ L10 [South]

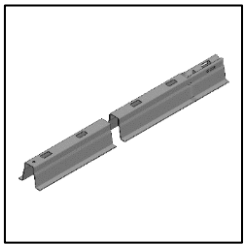

Roof carrier profile

741801300
741801400
741801500

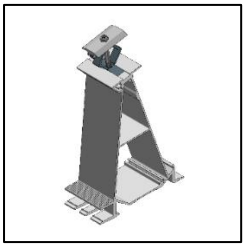

Back foot middle

724650

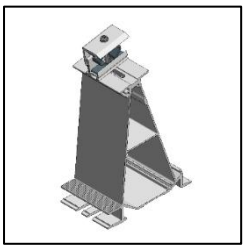

Back foot side

724651

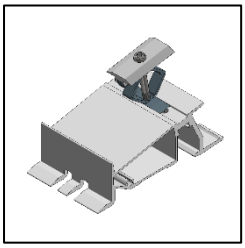

Front foot middle

724660

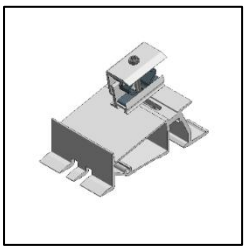

Front foot side

724661

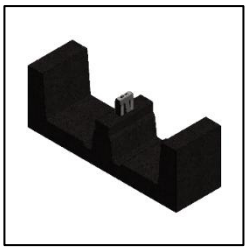

Tile carrier

729622 - for Bitumen / TPO / EPDM roofs
729629 - for PVC roofs

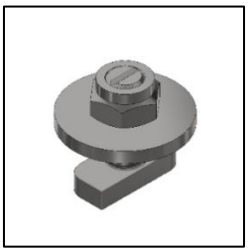

Coupling set

774221

Back plate

742510 - [for panel length 1520-1720mm]
742512 - [for panel length 1720-1920mm]
742515 - [for panel length 1920-2120mm]
742516 - [for panel length 2120-2320mm]

Ss. Thread forming bolt

773320

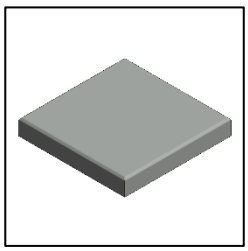

Concrete tile 9 kg
(300x300x45mm)

7506303045

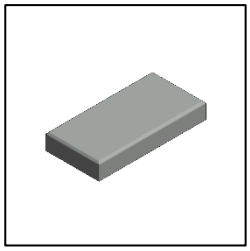

Concrete tile 4,5 kg
(300x150x45mm)

7506301545

For the ‘optional’ components, see next pages.

Optional components

The optional components can be used for specific situations and to further optimize the system.

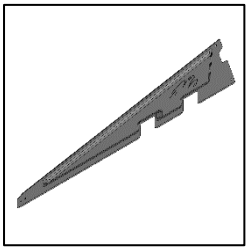

Universal side plate

742540

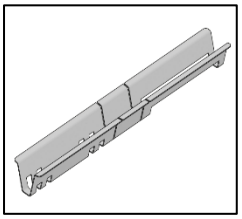

Ballast carrier

742563 - [for panel length 1520-1720mm]
742564 - [for panel length 1720-1920mm]
742565 - [for panel length 1920-2120mm]
742566 - [for panel length 2120-2320mm]

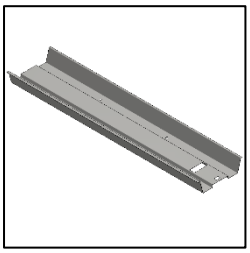

Ballast tray

742610 - [for panel length 1520-1720mm]
742612 - [for panel length 1720-1920mm]
742615 - [for panel length 1920-2120mm]
742618 - [for panel length 2120-2320mm]

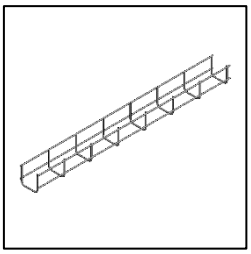

Cable basket 50x60mm, length 3000mm (76010050603000)

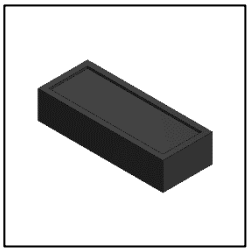

Elevation block for gravel roofs

729627

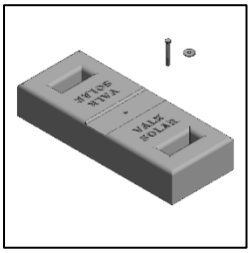

Mass block (750520)

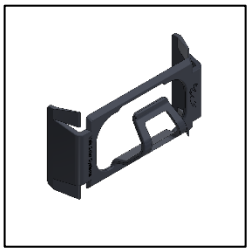

Cable clamp for rear feet

732011

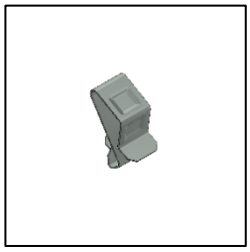

Cable clamp for fixation to panel frame

732001

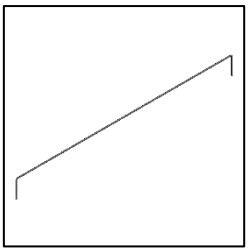

Dilatation wire

732020

Multi-wire / connector clip for roof carrier

732012

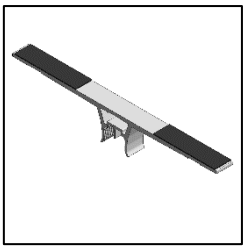

Ballast wing

725150

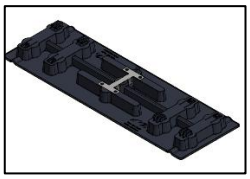

Load distributor

729634

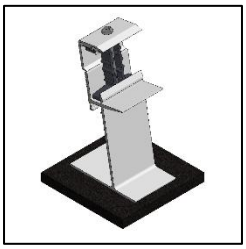

Panel support - Front foot

724710

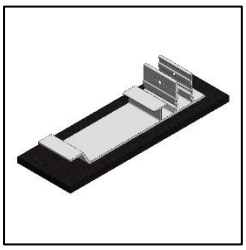

Panel support - Base plate small

724720

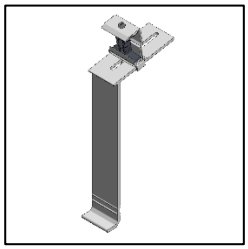

Panel support - Upright

724730

Pre-assembly of roof carriers sets

A fast and convenient way of working can be best achieved by pre-mounting the supporting feet and tile carriers on the roof carriers before placing them on the roof. This method saves installation time. The aluminium feet are to be placed in the position where the letter “L” is visible on the roof carrier. The rubber tile carriers are placed in the second slot in front of the aluminium back foot.

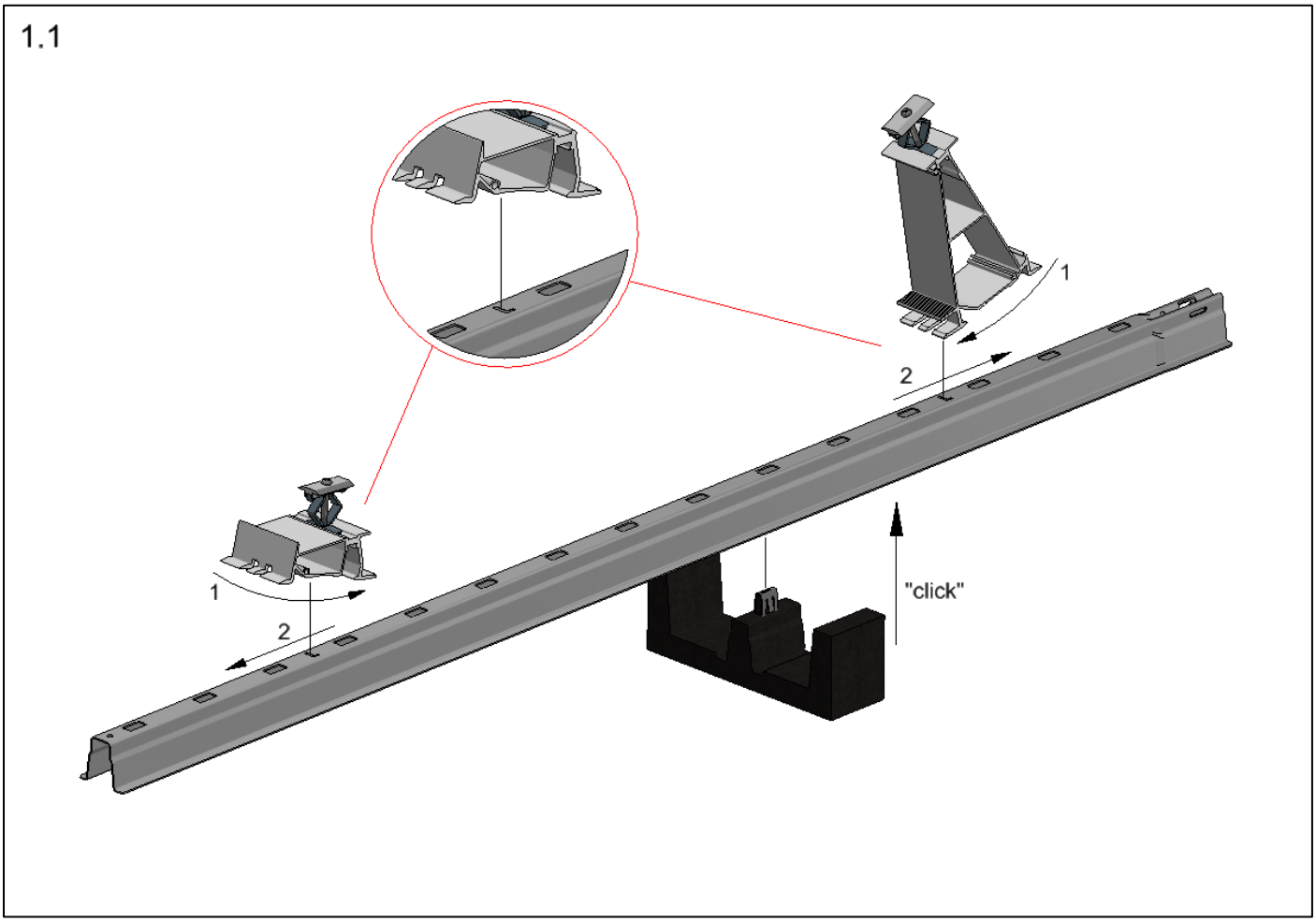

Side view

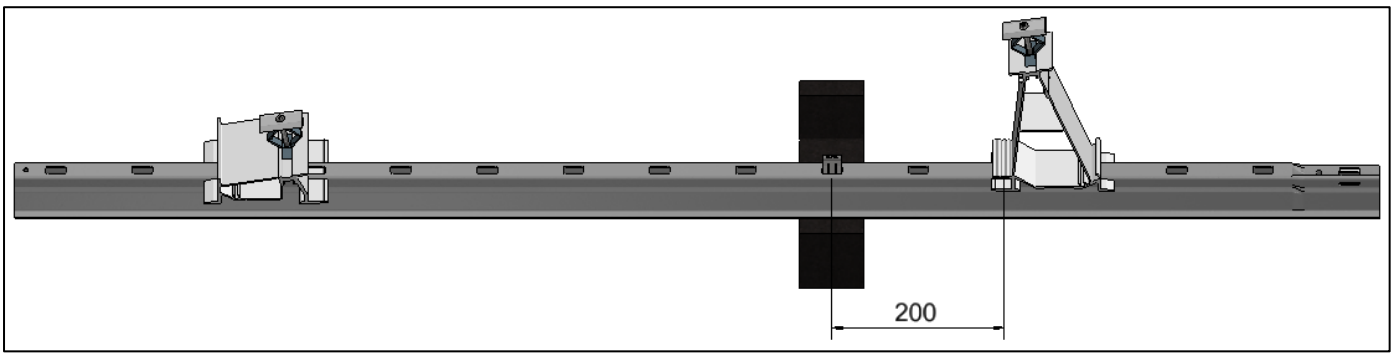

Alignment of roof carriers

Place the roof carriers in the desired layout or starting point. Connect the roof carriers by placing the end of the first roof carrier over the tapered end of the next roof carrier. The roof carriers are then fixed together using the coupling set (art. 774221). (see 1.3)

The center-to-center distance between the roof carrier rows is determined by the size of the used solar panel. The formula to calculate the distance is: “panel size + 10 mm”. For fast and accurate alignment of the roof carriers, it is recommended to use the alignment tool (art. 743220).

Dilatations

In order to handle the effects of thermal expansion and contraction of the ValkPro+ mounting system, the maximum length for a coupled system is 30 meters in the direction of the solar panels and 60 meters in the direction of the roof carriers. At each of these length a dilatation in the system is required.

The coupled mounting system must not be placed over a gutter or ridge. Also in these positions a dilatation is required.

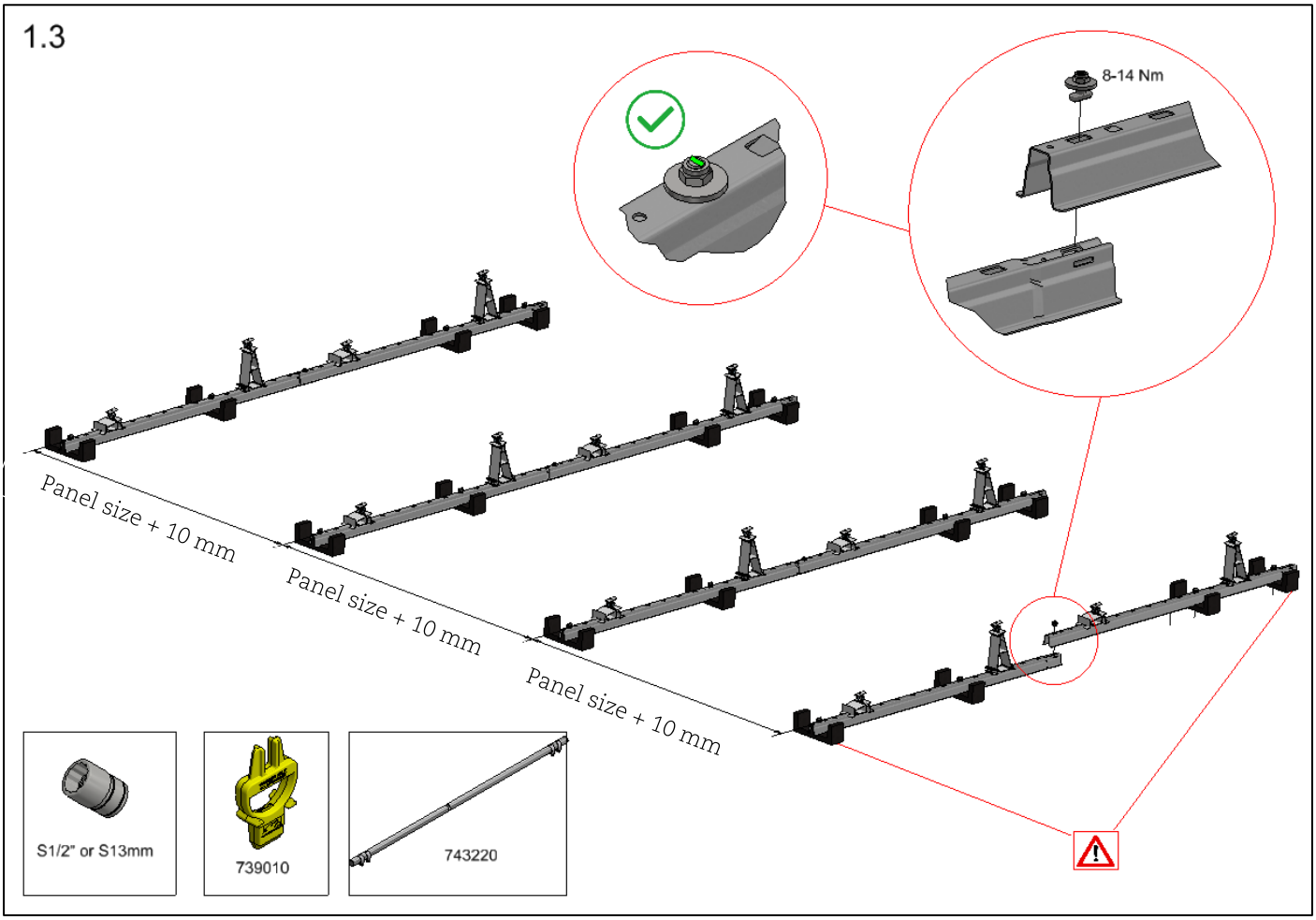

To avoid any future damage to the roof membrane, extra rubber tile carriers are to be placed in the first and last slot of each row of roof carriers.

Alignment stop on roof carrier

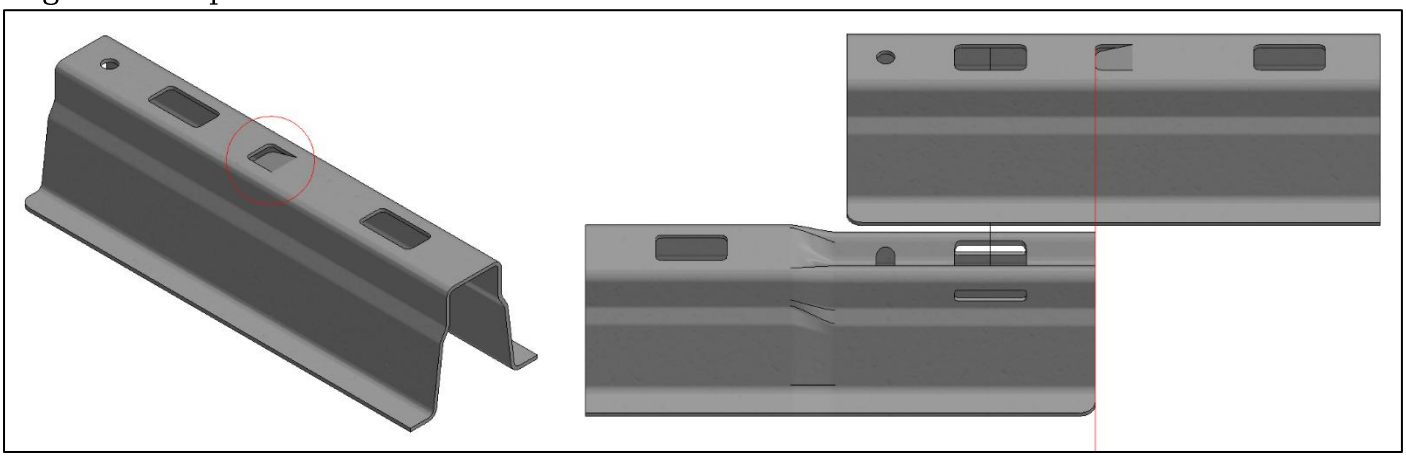

The smooth side of each roof carrier has a lip that can be used as a stop for alignment when coupling the roof carriers. The tapered end of the roof carrier can be pushed against the stop. This makes sure the roof carriers are aligned properly.

Alignment key ValkPro+ (art. 739010)

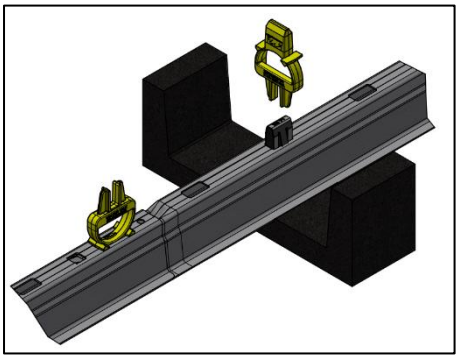

The alignment key can be used to align the overlapping slots of the roof carriers.

Alignment set ValkPro+ (art. 743220)

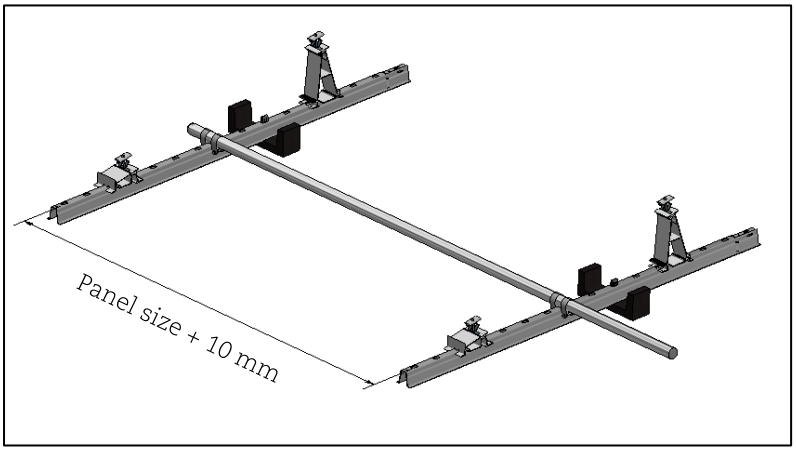

The alignment set can be used to make sure the roof carrier rows are placed at the correct pitch.

Placing ballast tiles

The ballast tiles can be placed on the rubber tile carriers or on ballast carriers. Check the Project Report or ballast drawing carefully to determine the required ballast weight for each solar panel.

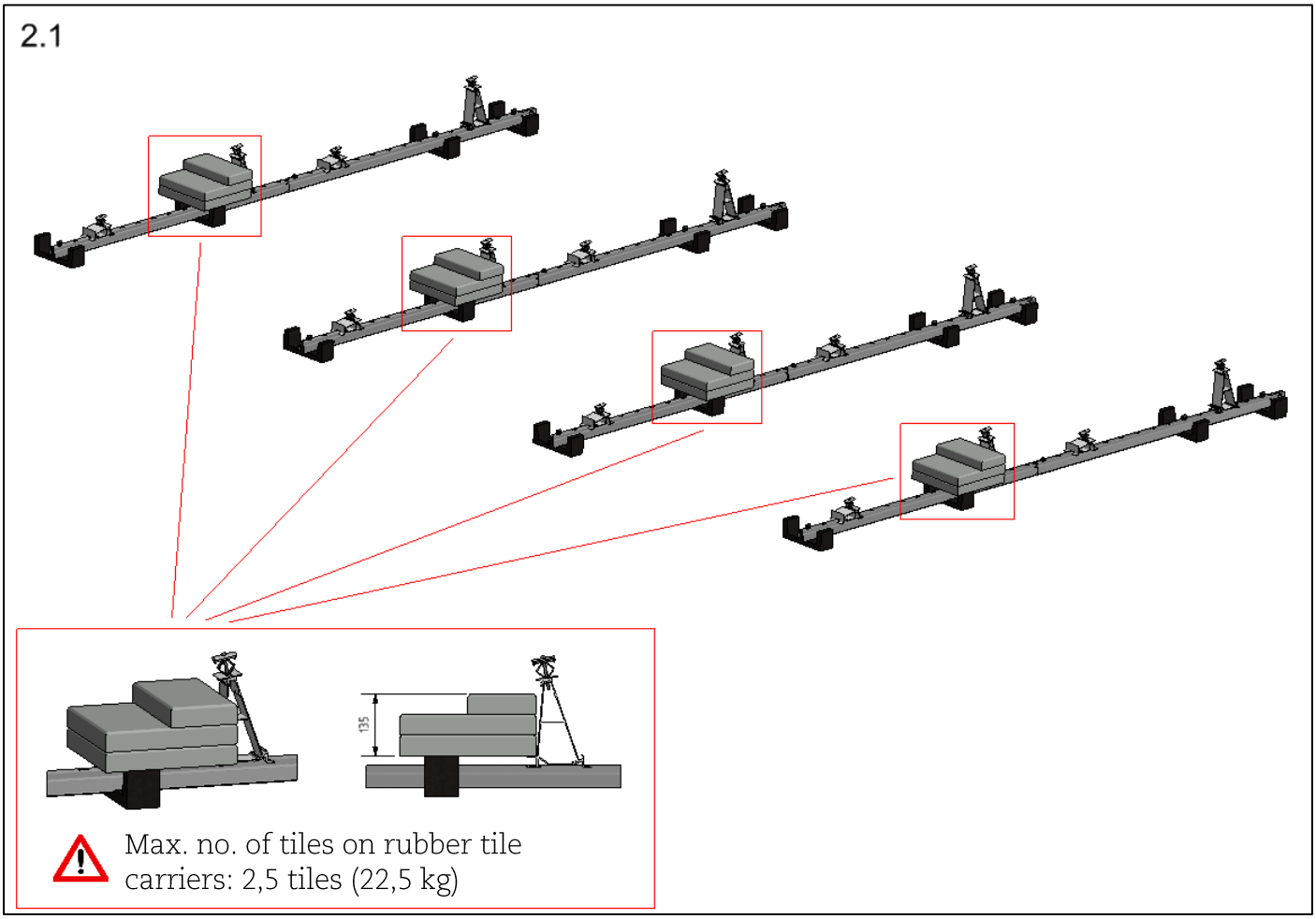

Ballast carriers

In case the required ballast per ballast point is more than 2,5 tiles or when the tiles cannot be placed on the tile carriers due to side plates, ballast carriers are to be used. The ballast carriers are placed on both sides of the rubber tile carrier. The tiles can then be placed on the ballast carriers. (see image 2.2).

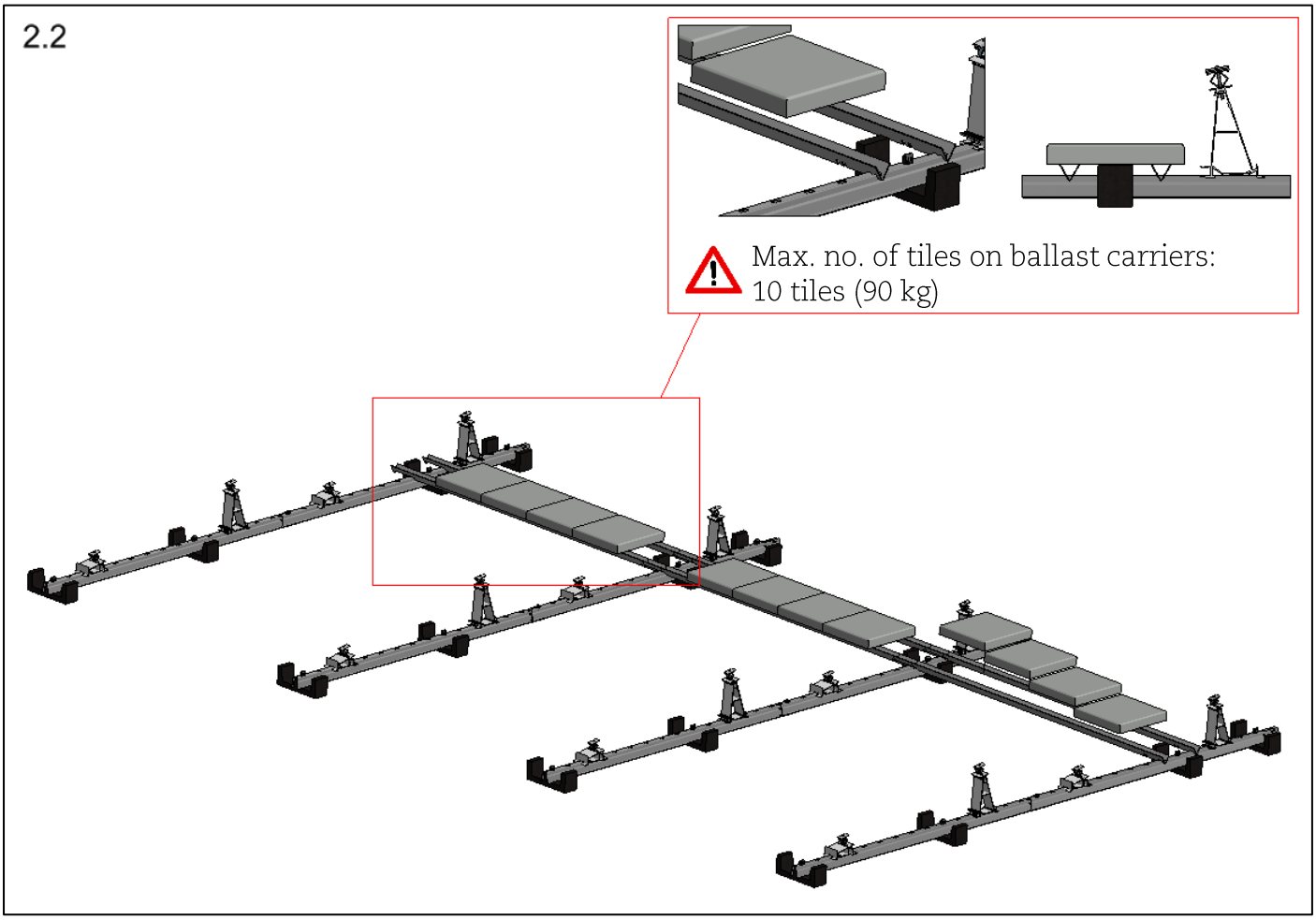

Dividing ballast on a ballast carrier

When using the 2179 & 2379mm ballast carrier, placing the ballast outward as much as possible is recommended. A third ballast carrier can also be used for the 2379mm length when more than 8 tiles are needed, this can only be done if no side plates are required.

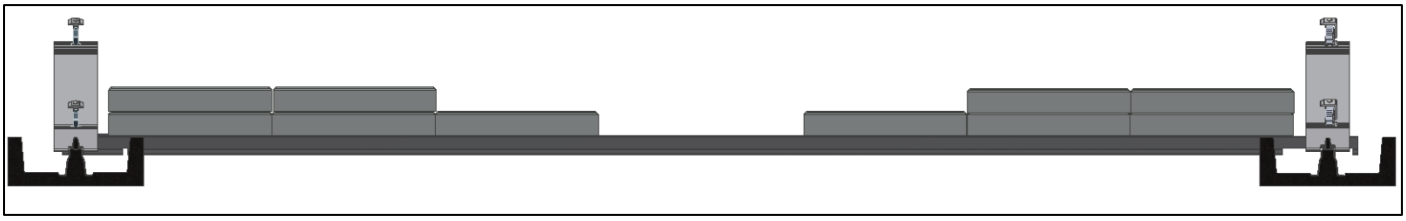

Ballast wings

In case tile sizes are used for ballast that are different from the ValkPro+ standard, ballast carriers and ballast wings can be used. Ballast wings (Art. 725150) can provide additional support for the tiles and can be placed on any slot on the roof carrier.

The ballast wing is mounted by placing it over the roof carrier over a free slot and pushing it downwards.

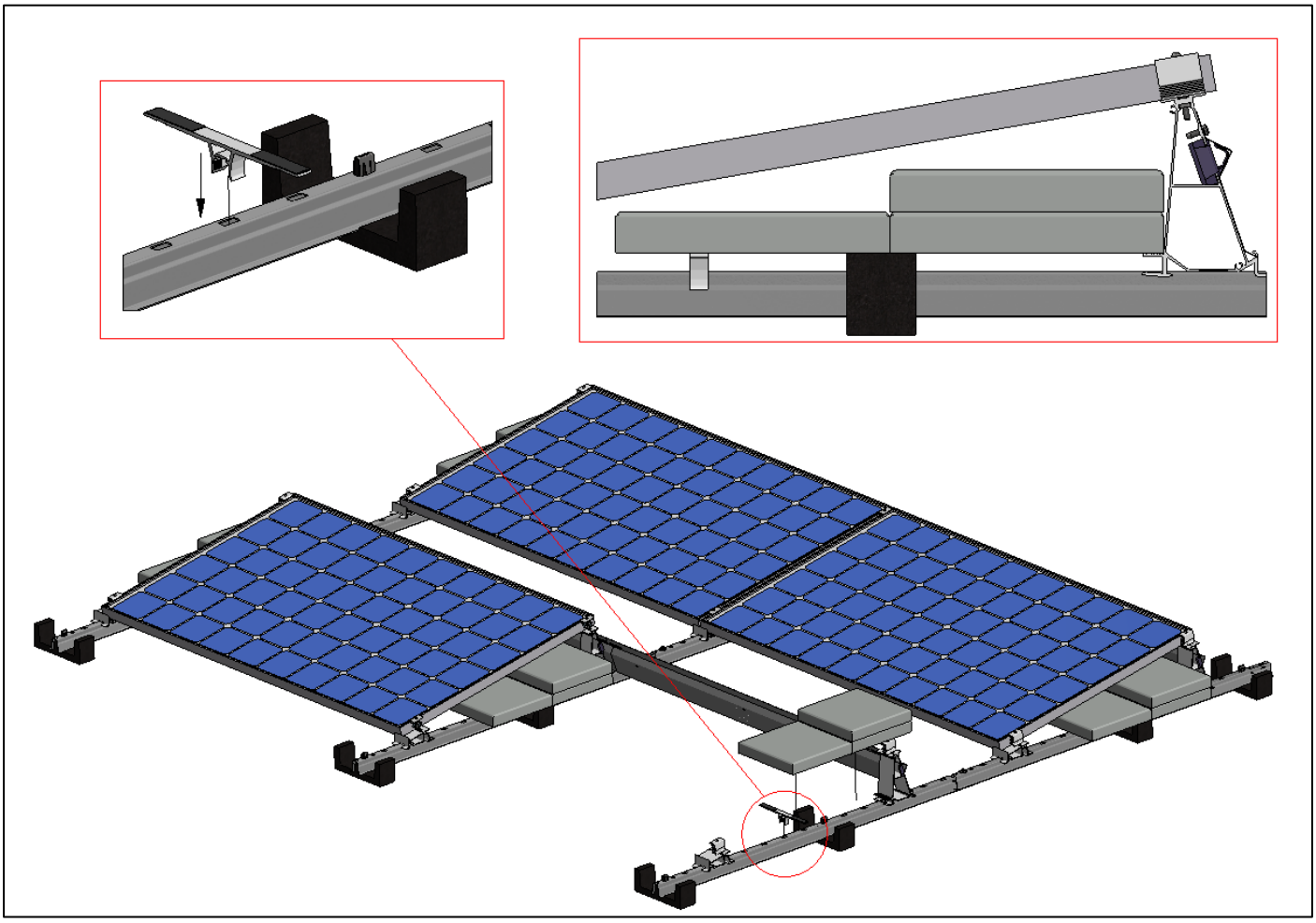

Ballast trays

In case gravel (coming from the roof on which the system is placed) or other size tiles / bricks are used for ballast, ballast trays can be applied. The ballast trays are placed over the roof carriers. The slots in the ballast trays on one side will fit the rubber tile carriers so that the ballast trays cannot move. The other side of the ballast tray can be placed in the next ballast tray.

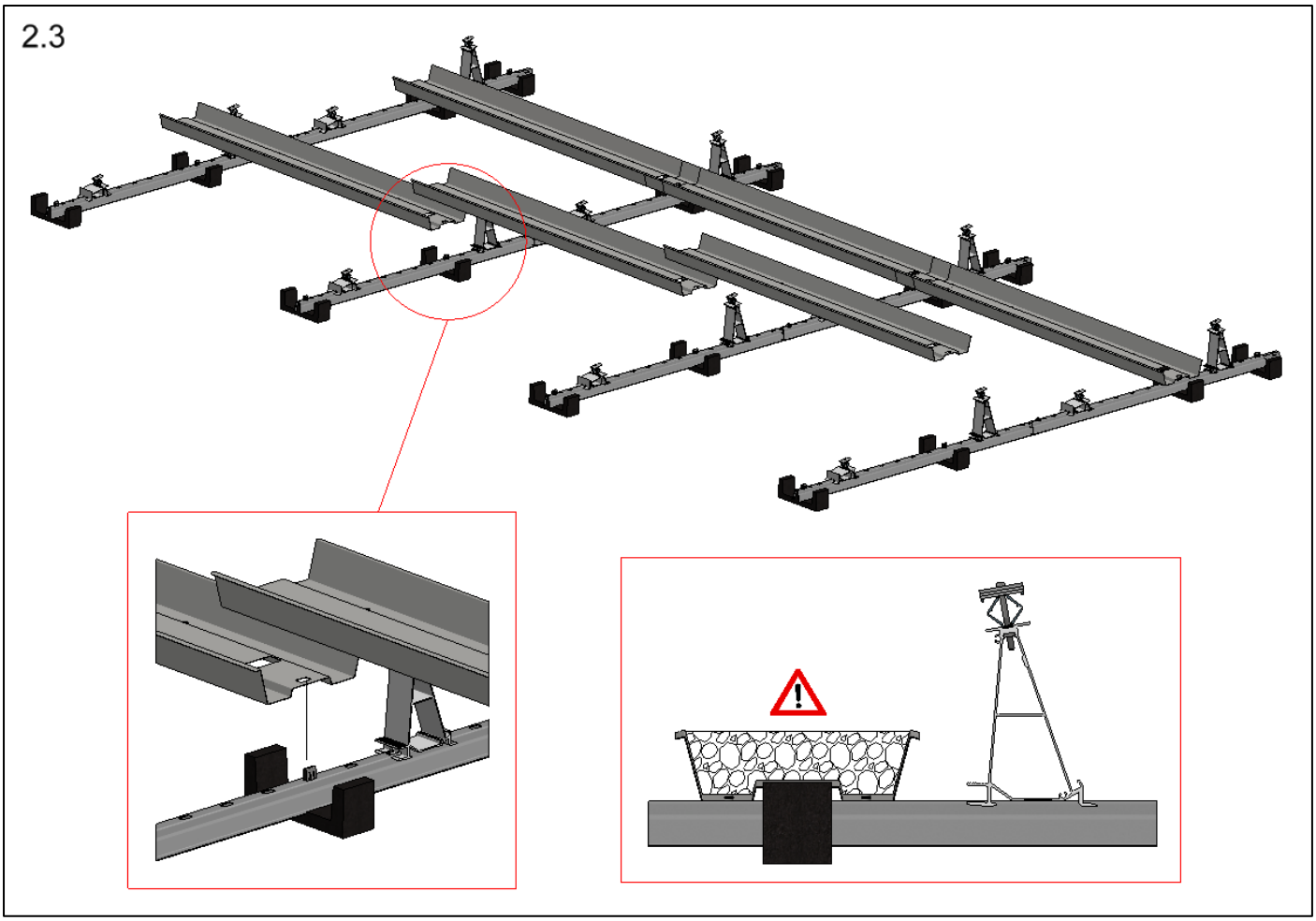

The max load per tray in case it is filled to the maximum with gravel (based on a gravel density of 1500 kg/m³):

Art. 742610 (1780 mm) – Max. 36,6 kg (or 0,0244 m³)
Art. 742612 (1980 mm) – Max. 40,9 kg (or 0,0273 m³)
Art. 742615 (2180 mm) – Max. 46,4 kg (or 0,0309 m³)
Art. 742618 (2380 mm) – Max. 50,7 kg (or 0,0338 m³)

When using tiles or bricks for ballast: the tiles and bricks may not be stacked. Only 1 layer is permitted. The maximum load per ballast tray must not exceed 90 kg.

Ballast spreading

The ballast weight placed must always be in line with the ballast drawing for each project. The ballast drawing in the Project Report indicates the required ballast per solar panel for a South system. Without ballast carriers the ballast is to be divided over the ballast points under the individual solar panels. The example image below shows how the ballast should be spread over the various ballast points.

The spreading of the ballast is always from the outside of the mounting system inwards. This is to ensure that the solar panels on the sides of the system never have lower ballast then the other panels in the system. Since the ballast is spread from outward to inward, the centre row of roof carriers will end up without ballast tiles. This is allowed.

PLEASE NOTE! Image below is an example.

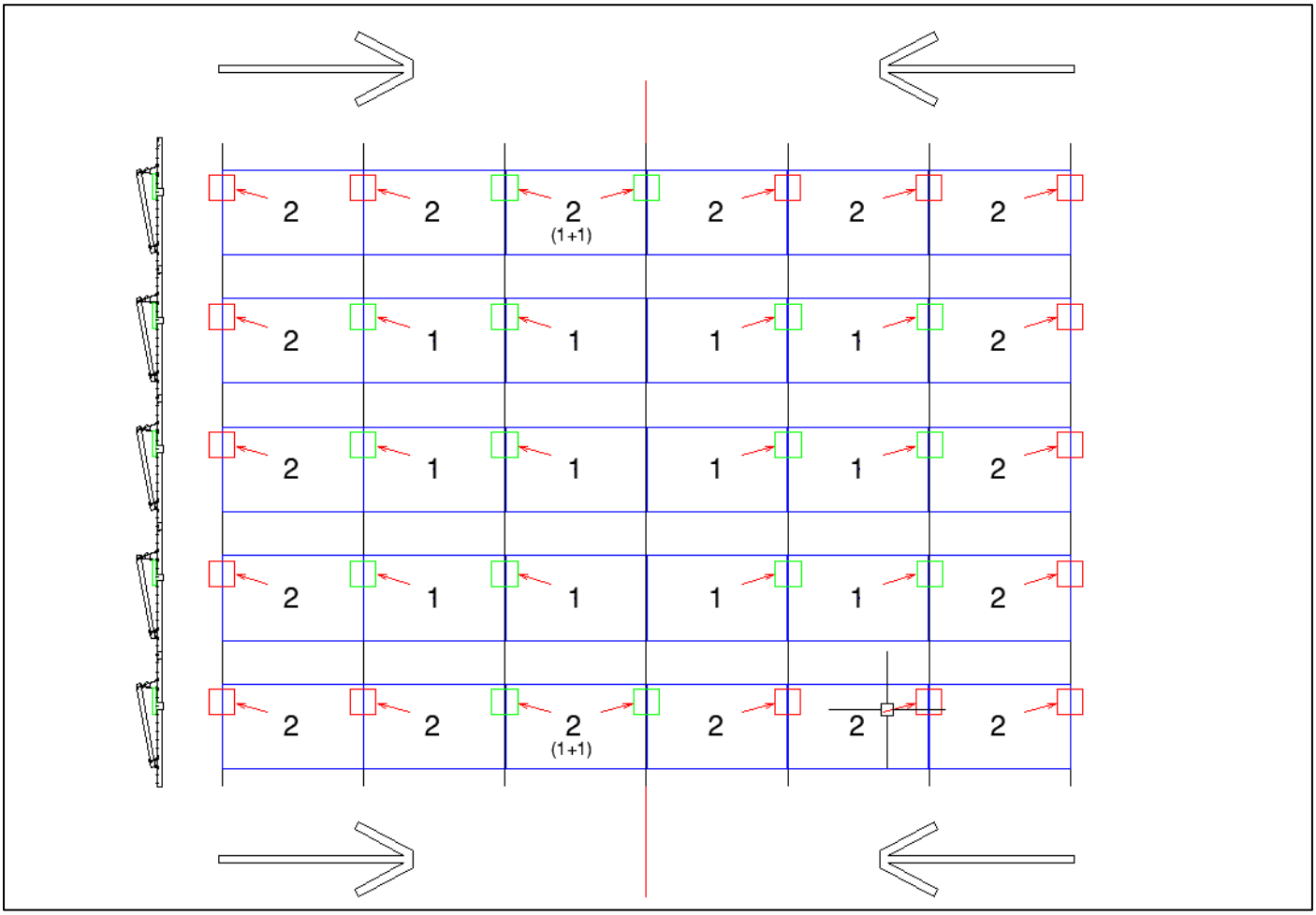

The required number of tiles or Kgs are indicated per panel or peak in the ballast drawing.

Load distributors

In order to reduce the point load of the ValkPro+ system on the roof, load distributors can be used. It is important that the load distributors are positioned correctly to have full effect. The numbers in the image below represent the best preferred positions for the load distributors when using 1, 2 or 3 pieces per panel. For more information, please refer to the datasheet that can be downloaded on the website.

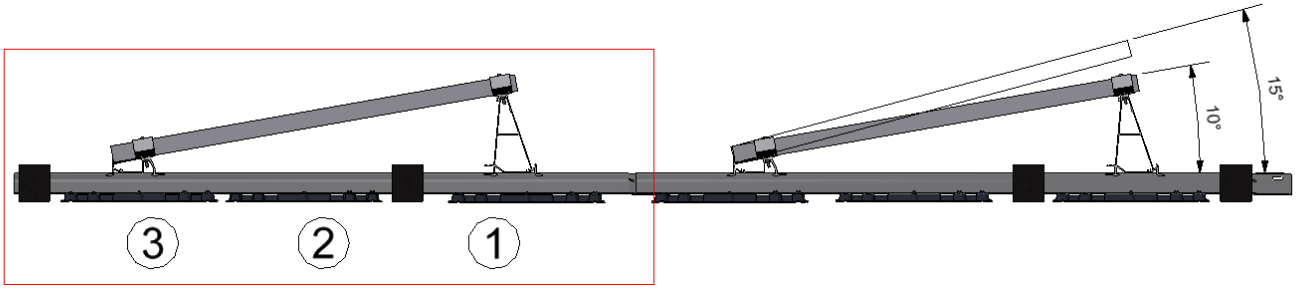

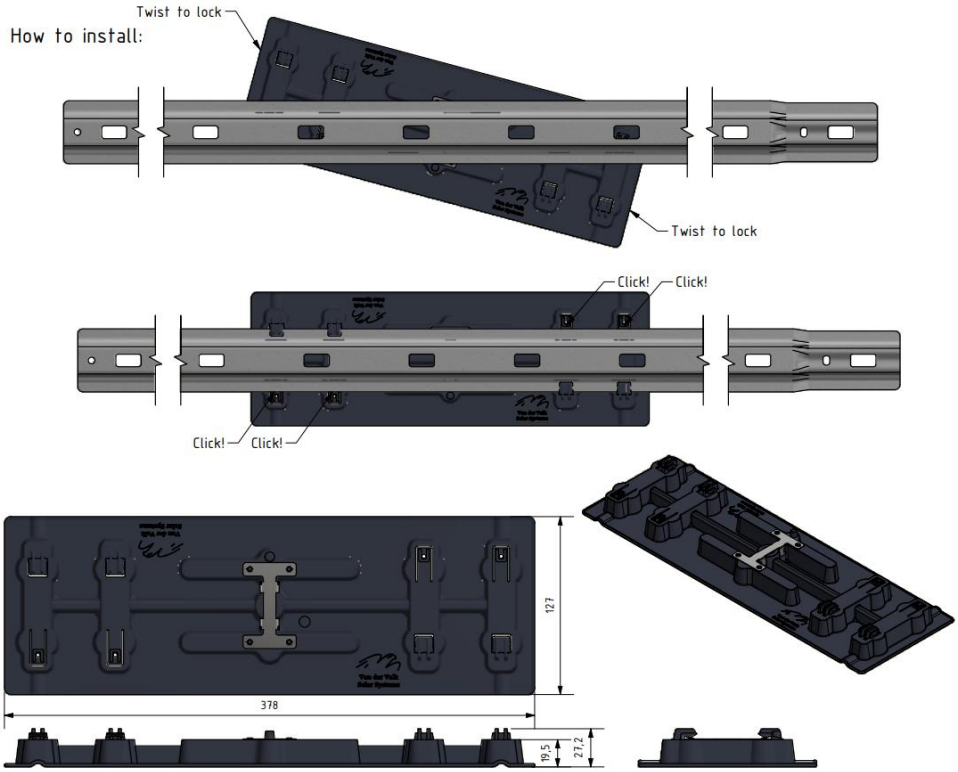

Side plates

Side plates are optional when the complete mounting system is in the middle zone of the roof.

Side plates are mandatory in case the following situations:

- The mounting system is (partially) placed in the edge / corner zone of the roof.
- The roof height is 25m or higher, unless it has been precisely determined that the panel field is entirely within the middle zone of the roof.
    - If you have any questions or uncertainties, you should always contact Van der Valk Solar Systems.

Each side plate is fixed to the sides of the aluminium feet using three thread forming bolts M6 x 20 mm (773320). (see image 3.1)

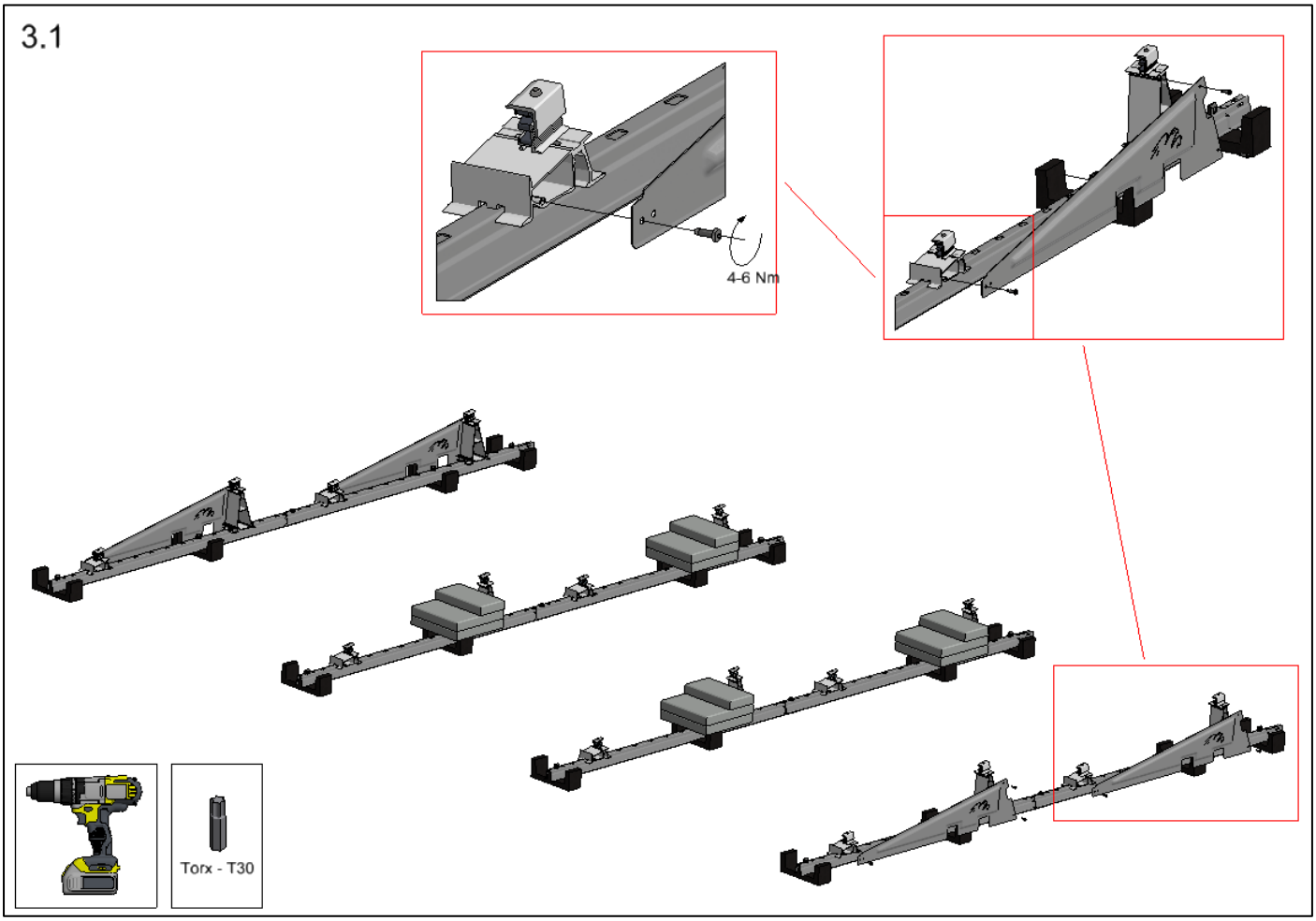

During the planning and execution of the installation, always take into account possible changing weather conditions, in particular strong winds or storms. Take the right measures and make sure that no situation can occur where solar panels have already been placed on the system, but other critical parts (such as ballast tiles, side or back plates) are still missing.

Placing solar panels

Place the frames of the solar panels under the panel clamps and make sure ALL the panel clamps are properly fastened.*

*The tightening torque may deviate by ±4 Nm.

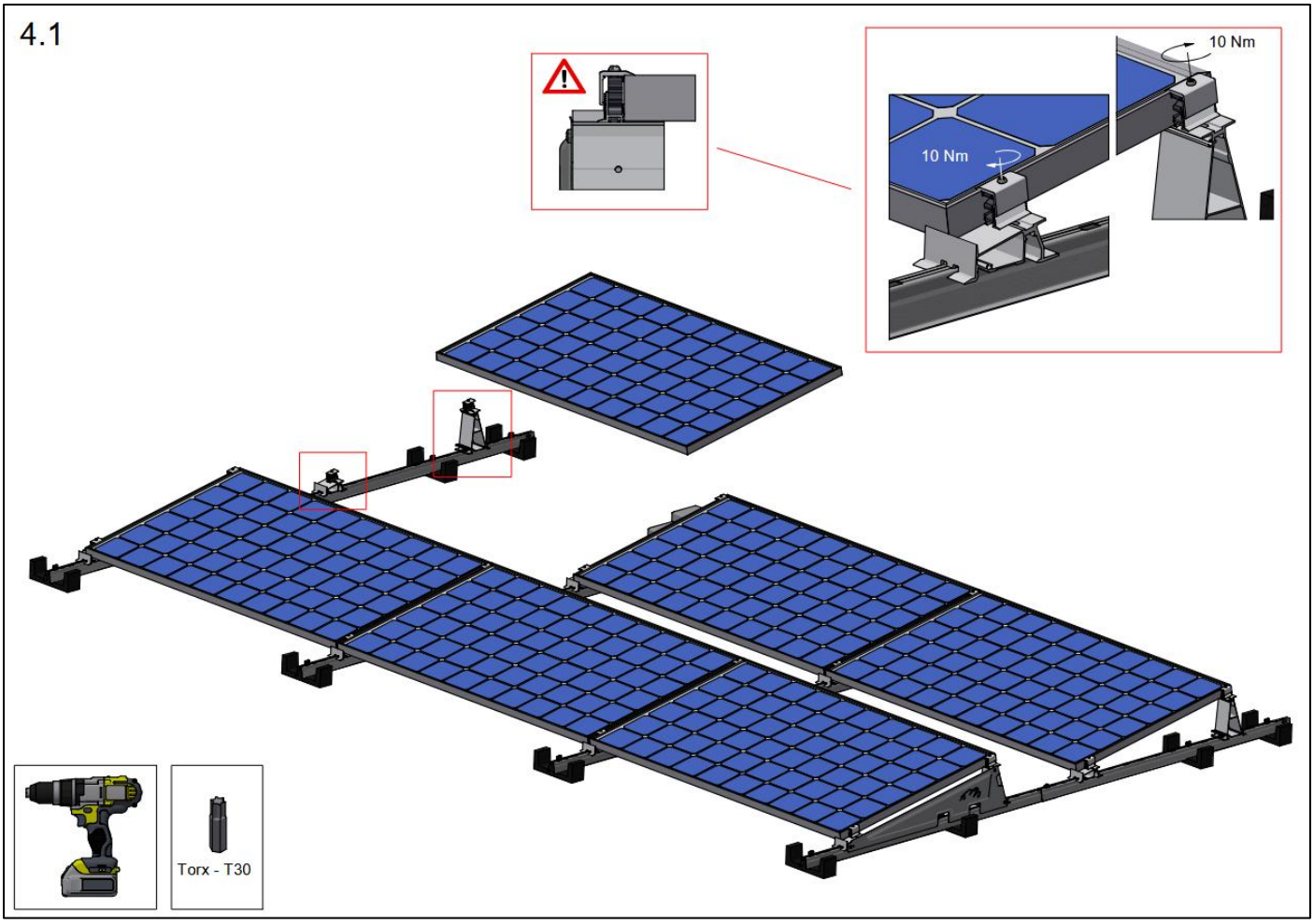

Make sure the top section of the end clamp is positioned in the correct height slot, aligned with the panel frame thickness, before fastening the clamp. Each clamp must have an overlap of at least 6,3 mm with the panel frame, in order to provide sufficient clamping force.

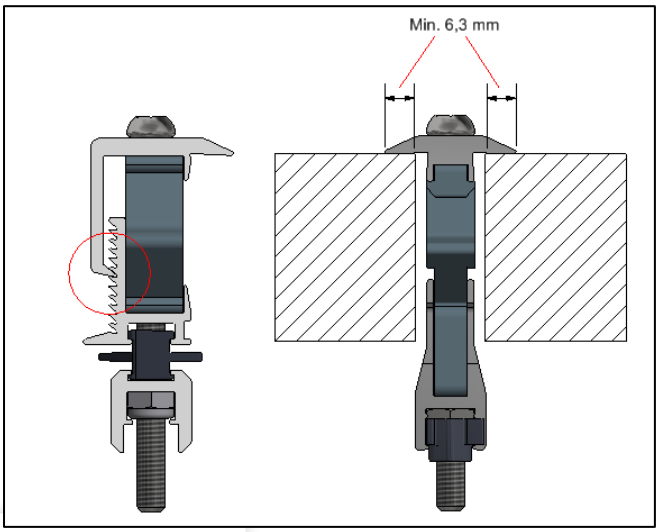

The front foot has an upstanding edge that can be used as a stop for easy alignment of the solar panels. However, it is not mandatory to place the panel frame against this stop in all situations. There is some room for slight adjustments. The panel positioning is ok as long as the side of the frame is still positioned in range X.

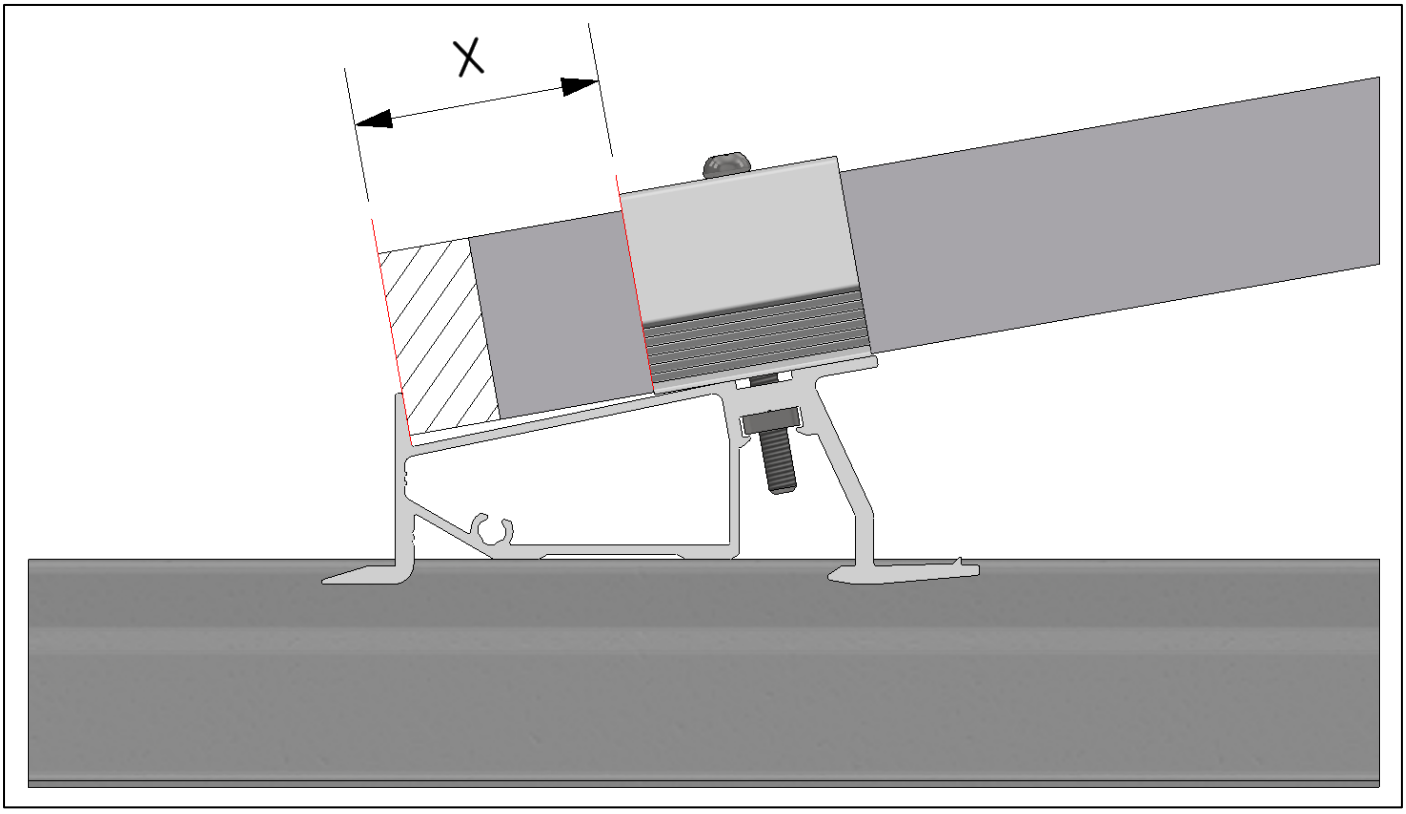

Back plates

Back plates are mandatory for a ValkPro+ South system. One back plate for each solar panel is required. For installation, the back plates are positioned with the underside into the upstanding edge of the back feet and are then fixed on the top side using thread forming bolts (Art. 773320). In the position between two solar panels, the back plates are overlapping and can be fixed with one bolt.

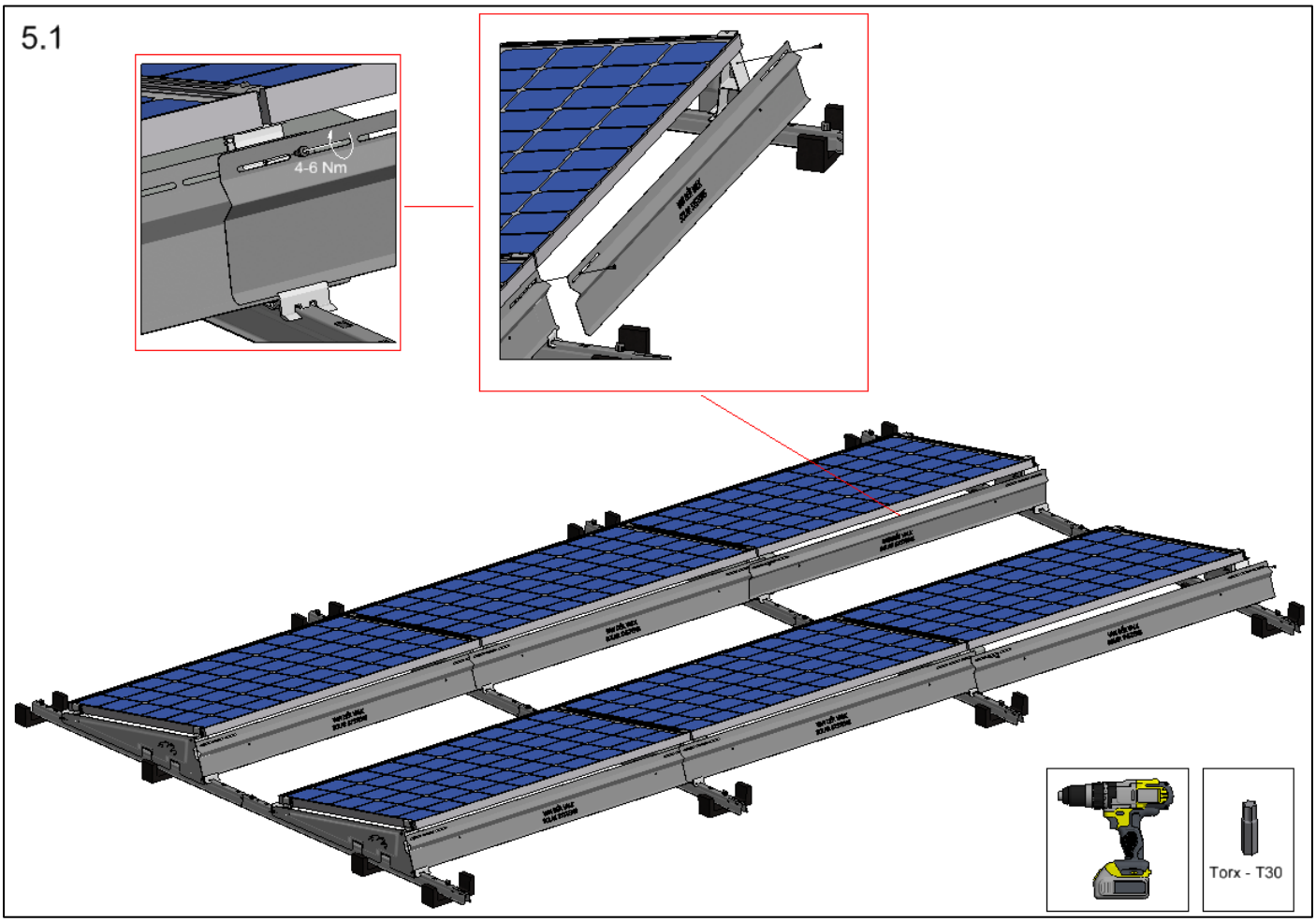

During the planning and execution of the installation, always take into account possible changing weather conditions, in particular strong winds or storms. Take the right measures and make sure that no situation can occur where solar panels have already been placed on the system, but other critical parts (such as ballast tiles, side or back plates) are still missing.

Micro-invertors

Micro-invertors can be fixed to the roof carrier using a coupling set (Art. 774221).

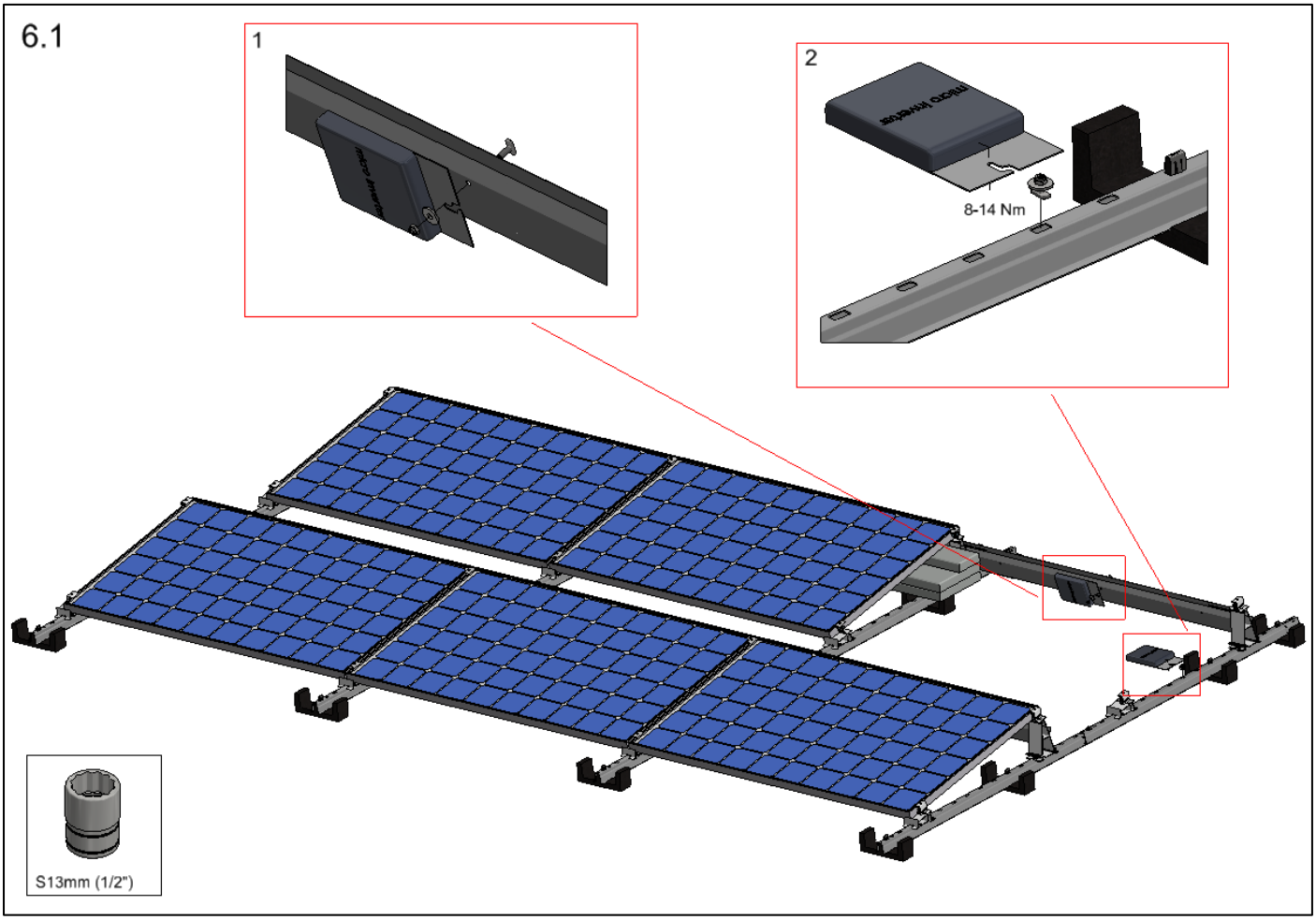

Dilatations

In order to handle the effects of thermal expansion and contraction of the ValkPro+ mounting system, the maximum length for a coupled system is 30 meters in the direction of the solar panels and 60 meters in the direction of the roof carriers. At each of these length a dilatation in the system is required. Also in case the mounting system is placed over a gutter or roof, a dilatation is required.

When a system has a dilation, the system is seen as two separate systems. However, if the gap between the systems is limited (see dimensions A and B), the outer panels of the adjacent systems can be calculated as “shielded panels”. Shielded panels require less ballast, compared to “exposed panels”.

The gaps between the systems for the dilatations are shown in image 7.1.

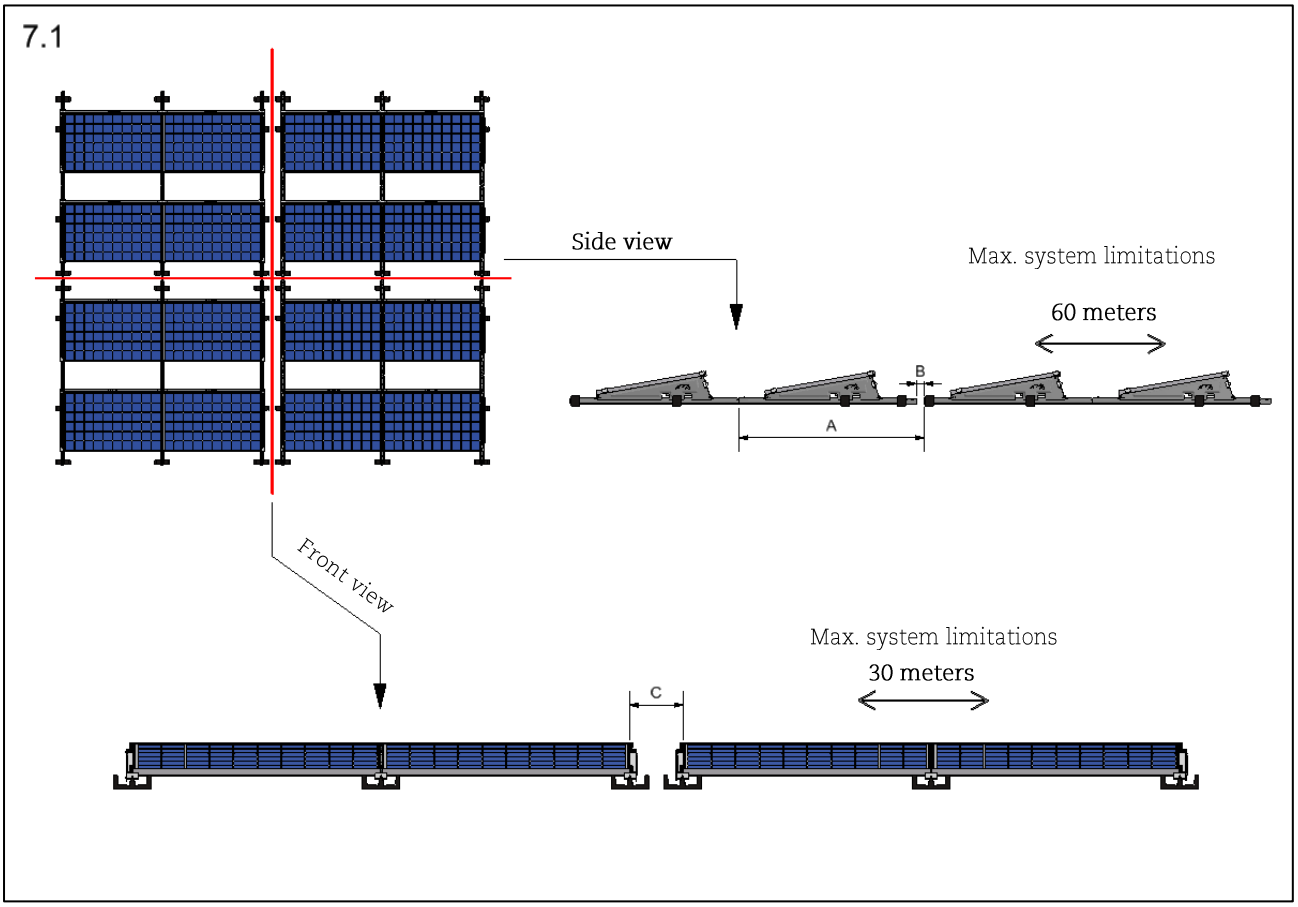

Dimension A:
For pitch 1300mm - [min. 1420 mm and max. 1700 mm]
For pitch 1400mm - [min. 1520 mm and max. 1700 mm]
For pitch 1500mm - [min. 1620 mm and max. 1700 mm]
For pitch 1600mm or larger, the outer PV-panels are always ‘exposed’.

Dimension B:
For pitch 2150mm - [min. 37 mm and max. 317 mm]
For pitch 2300mm - [min. 37 mm and max. 217 mm]
For pitch 2400mm - [min. 37 mm and max. 117 mm]
For pitch 2500mm or larger, the outer PV-panels are always ‘exposed’.

Dimension C (gap between the frames of the solar panels):
Min. 350 mm and max. 500 mm

Cable management

The ValkPro+ system offers various solutions for cable management.

Cable clamp – back foot (Art. 732011)

Cable clamp (Art. 732011) can be clicked onto the aluminium back feet of the system, and can hold multiple cables. (see image 7.1)

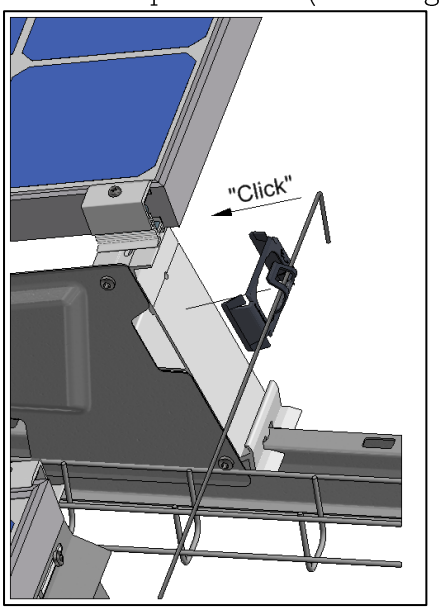

Cable clamp (Art. 732011) can hold:
5 cables - Ø6mm
4 cables - Ø7mm
3 cables - Ø9mm

Multi-cable and connector clip (Art. 732012)

The multi-functional clip can be clicked over the roof carrier in any desired position. It can hold various cables and MC4 connectors:

2x MC4 connector holder
2x Cable holder Ø12 mm (DC/AC)
12x Cable holder Ø6 mm

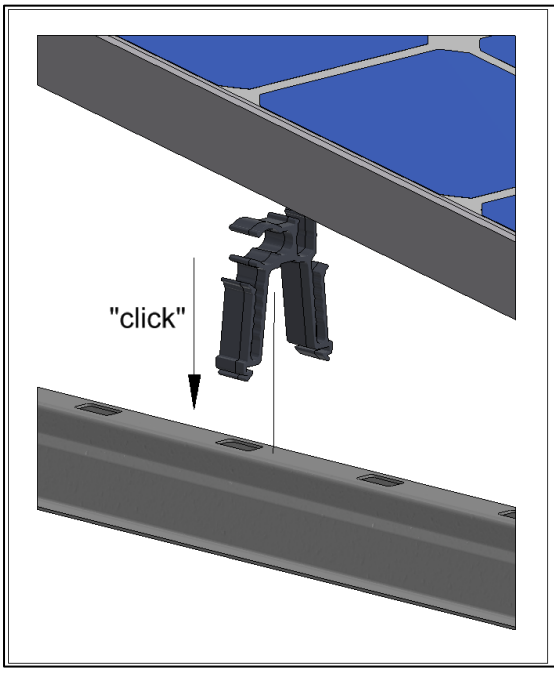

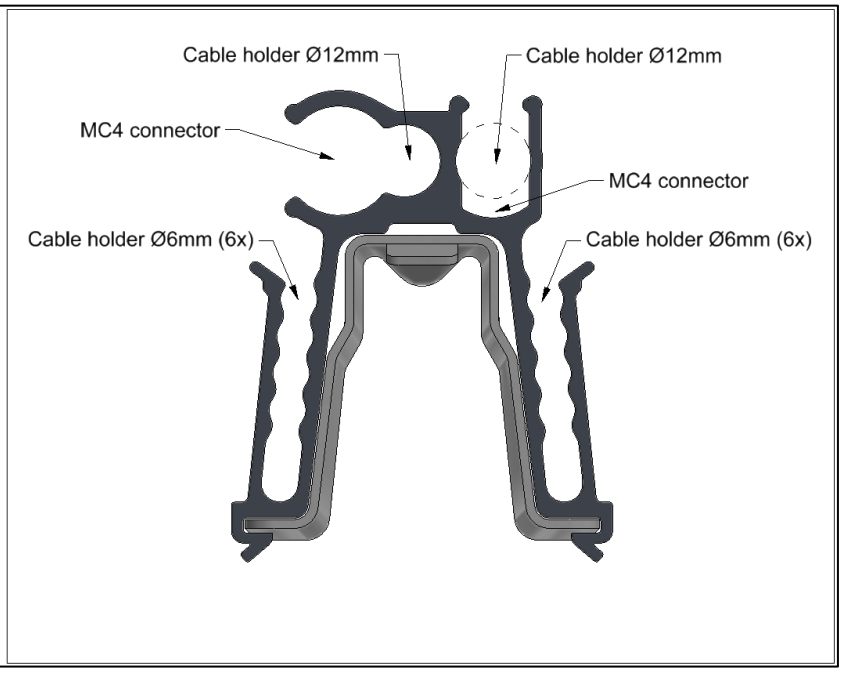

Cable basket integration

Small cable baskets can be integrated in the ValkPro+ system. Cable baskets with a width of 50 mm and height of 60 mm (Art. 76010050603000) can be placed on both sides of the roof carrier and fit perfectly in the tile carriers (see image 7.2).

Please note: in case ballast carriers are used, it is not possible to place the cable baskets in the inside position (under the solar panel) next to the roof carrier.

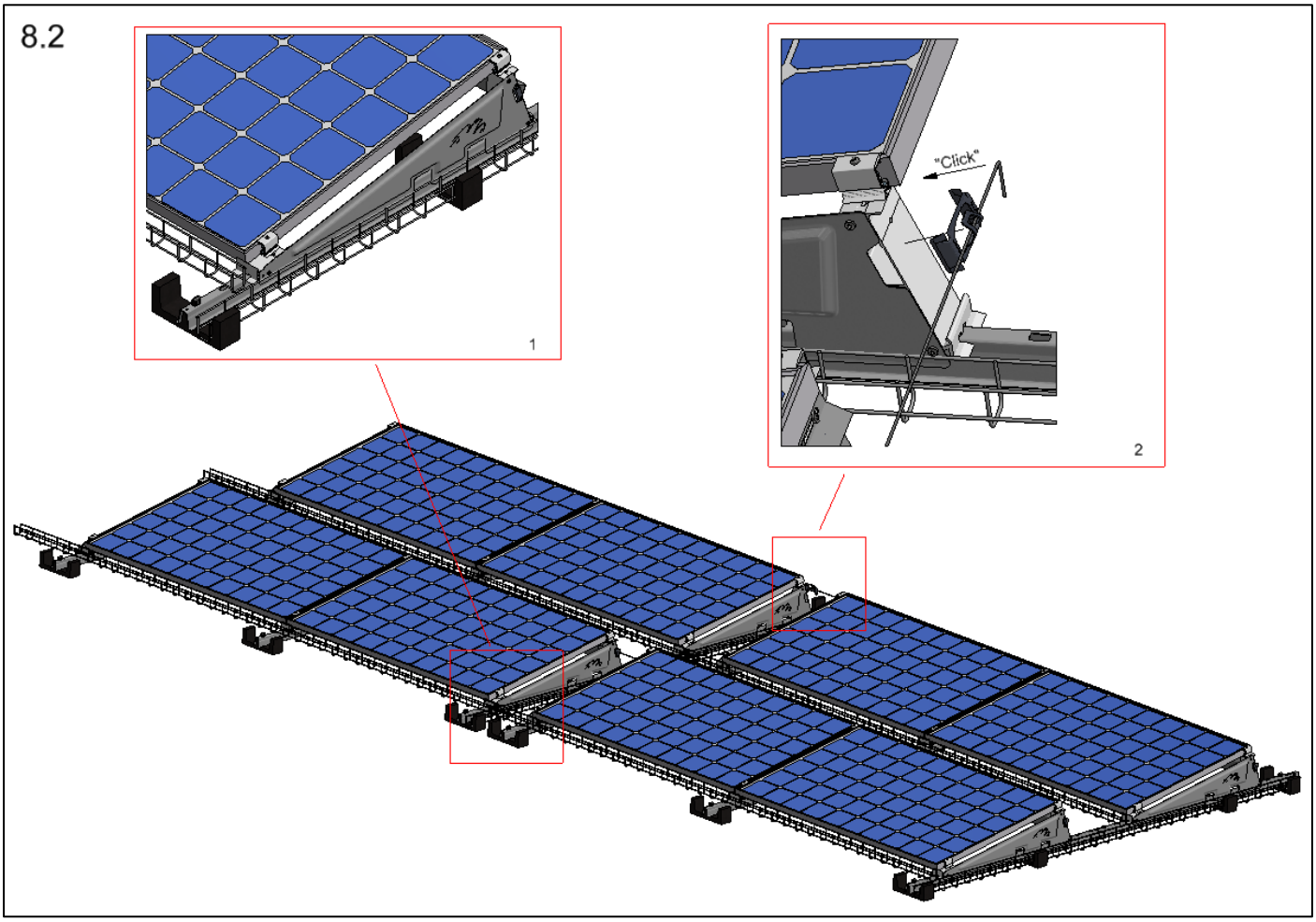

Dilatation wire (Art. 732020)

In positions where there is a dilatation in the system, a metal dilatation wire (Art. 732020) can be used. This wire offers a solution to keep the electric cables free from the roof surface. The wire can be placed in the cable clamps (Art. 732011). The extra length of the wire is there to absorb the thermal expansion of the mounting system. The electric cables can be fixed to the wire using tie-wraps.

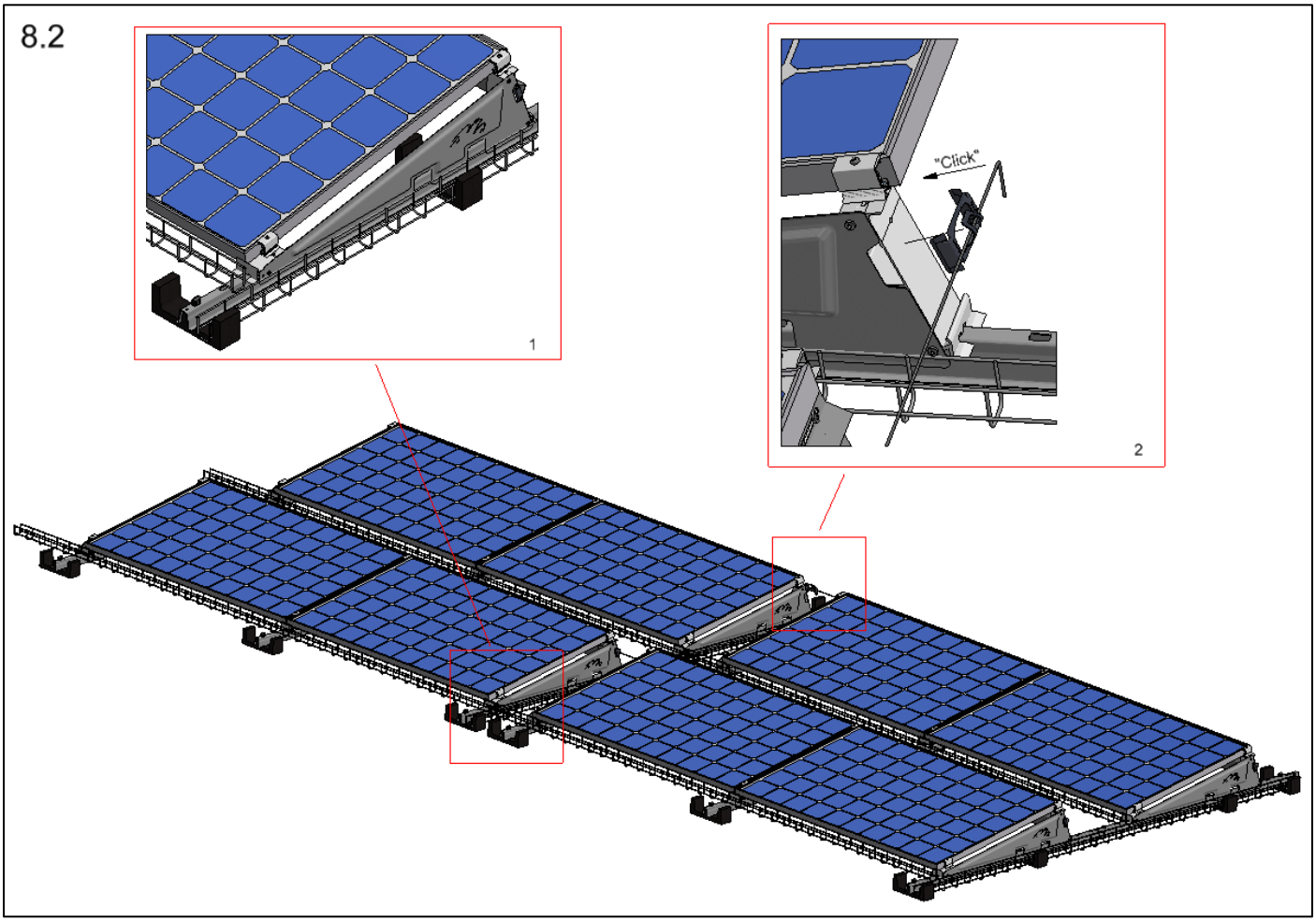

Installation recommendations for large projects

ValkPro+ is the perfect mounting system for large-scale installations. The system offers a good balance between pre-assembled parts and space savings in relation to transport and lifting activities.

When the steps of the installation are properly coordinated, a very rapid realization of the project is possible. Below is the sequence of steps applied by the most experienced installation teams:

1. Pre-assembly of the supporting feet on the roof carriers.
    i. Use a large table at a convenient height for the worker(s) to make the pre-assembly fast and easy.
2. Positioning and alignment of roof carriers on the roof.
    i. Use the adjustable alignment tool (Art. 743220) for the correct spacing between the roof carrier rows.
3. Placing ballast according to the ballast lay-out drawing.
4. Installation of cable management items and the cable system from inverters to relevant string array.
5. Mount solar modules on the ValkPro+ framework. ⚠
6. Install the back and side plates. ⚠

During the planning and execution of the installation, always take into account possible changing weather conditions, in particular strong winds or storms. Take the right measures and make sure that no situation can occur where solar panels have already been placed on the system, but other critical parts (such as ballast tiles, side or back plates) are still missing.

Installing ValkPro+ on other roof types and ground

The ValkPro+ system is suitable to be used on a range of roof types, besides the standard roof membranes.

Gravel roofs

In case the roof has gravel, the system can be placed without the need to remove all the gravel from the roof. This can be done by using rubber elevation blocks (Art. 729627) that can be placed in between the gravel. Make sure the gap between the gravel and the lowest part of the mounted solar panel is always between 95,5 - 115,5 mm.

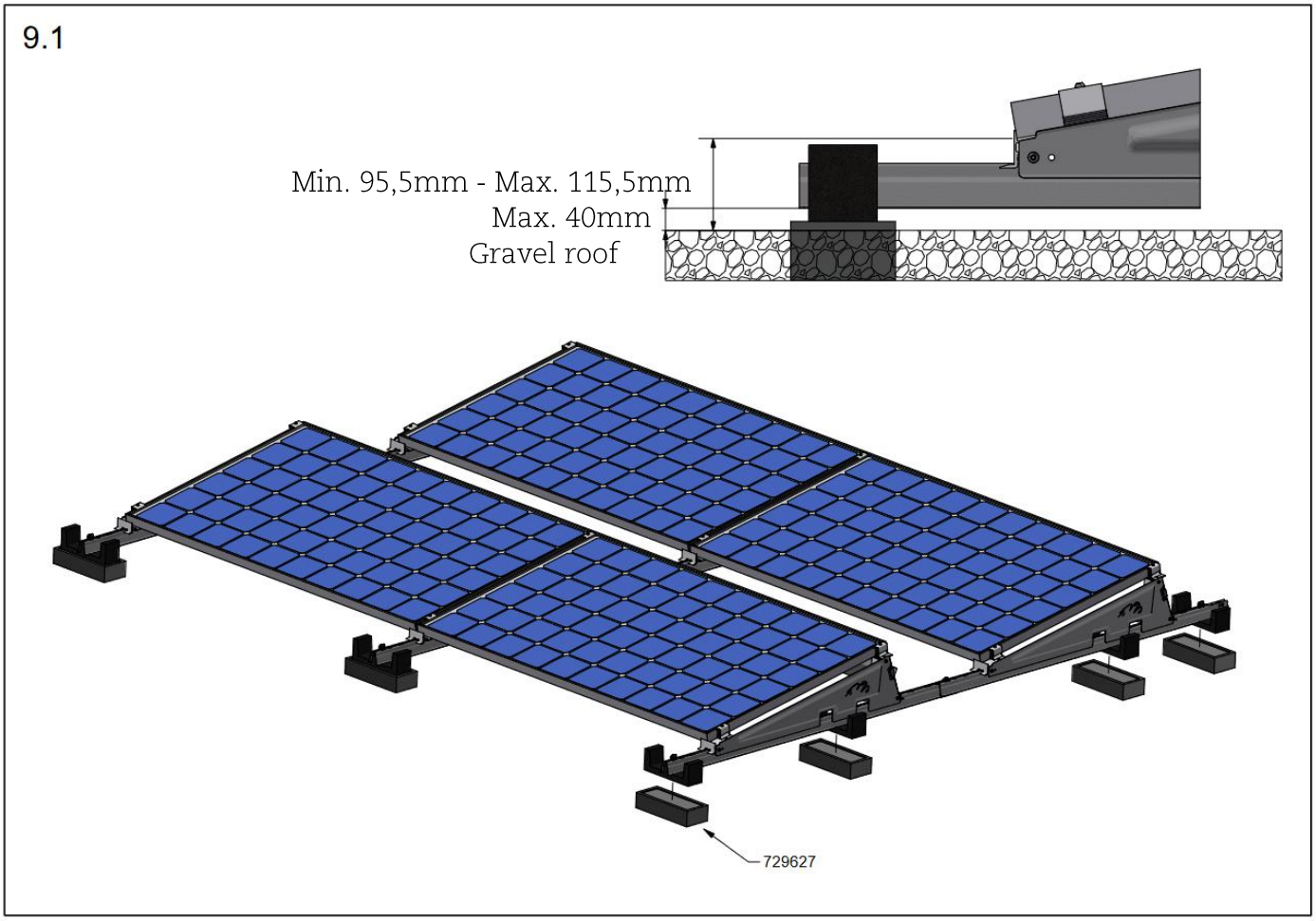

Sedum / green roofs

For sedum / green roofs the recommendation is to place tiles (Art. 7506303045) in the sedum to create a flat support base for the tile carriers of the ValkPro+ system. The tiles under the system will distribute the point loads better and prevent the system from sinking into the vegetation. It is important to ensure the gap between the sedum and the lowest part of the solar panel is always between 95,5 - 115,5 mm.

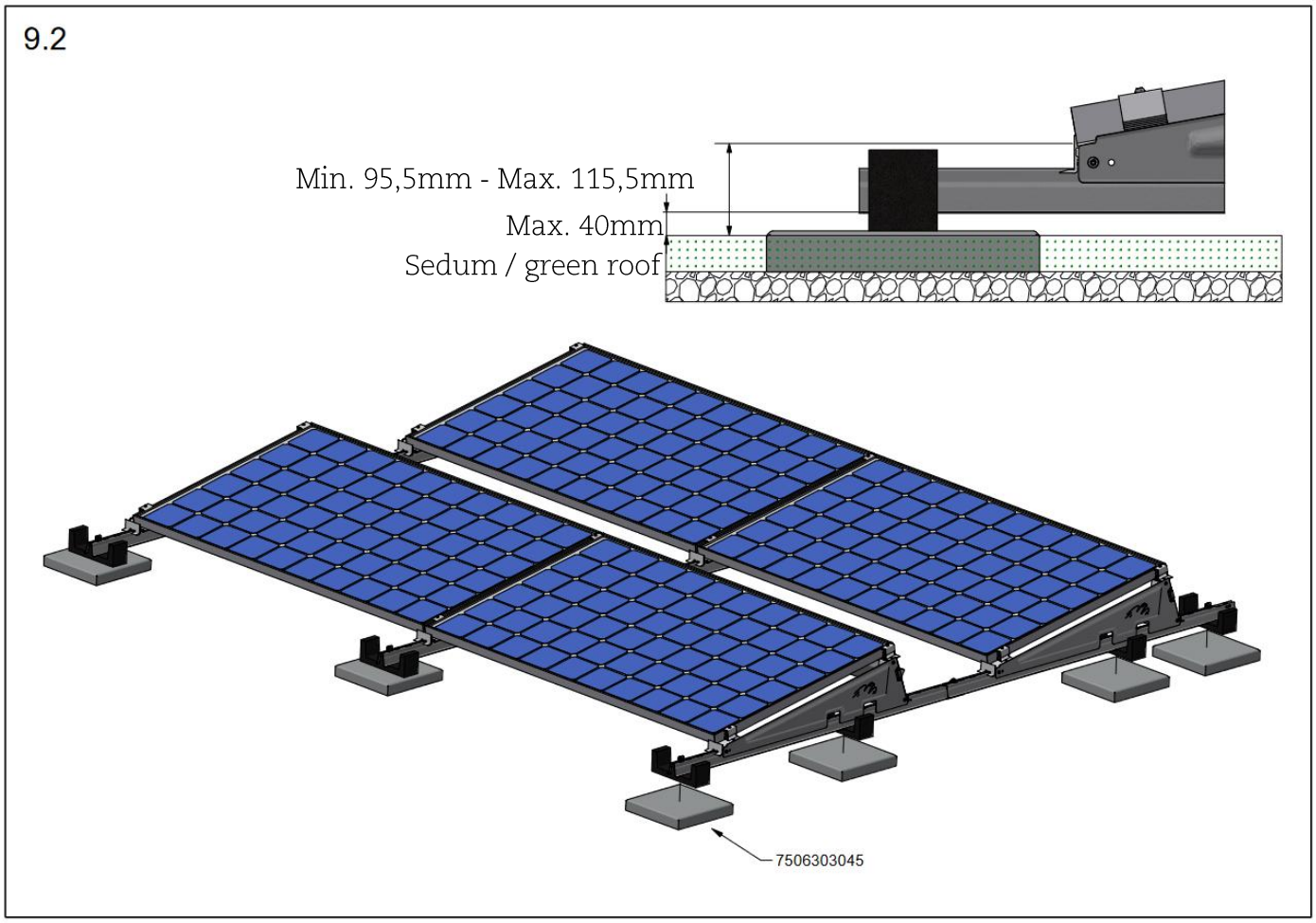

ValkPro+ as a field system

The Valkpro+ system is perfect to use on the ground as a “field system”, as long as the ground surface is flat, levelled out and can support the weight of the system. This can be realised in the following ways:

- By placing the system on a hard surface, such as pavement or concrete slabs (Stelcon)
- By placing the system in a field where a high quality rooting membrane is present under the system to prevent the spread of weeds. Gravel can be added under the system to protect the membrane from UV-light.

The system is mounted on top of concrete mass blocks (Art. 750520). The mass blocks are fixed to the roof carriers with a stainless steel bolt M8 x 65 mm and washer (Art. 774065 + 774009).

It is important to ensure the gap between the sedum and the lowest part of the solar panel is always between 95,5 - 115,5 mm.

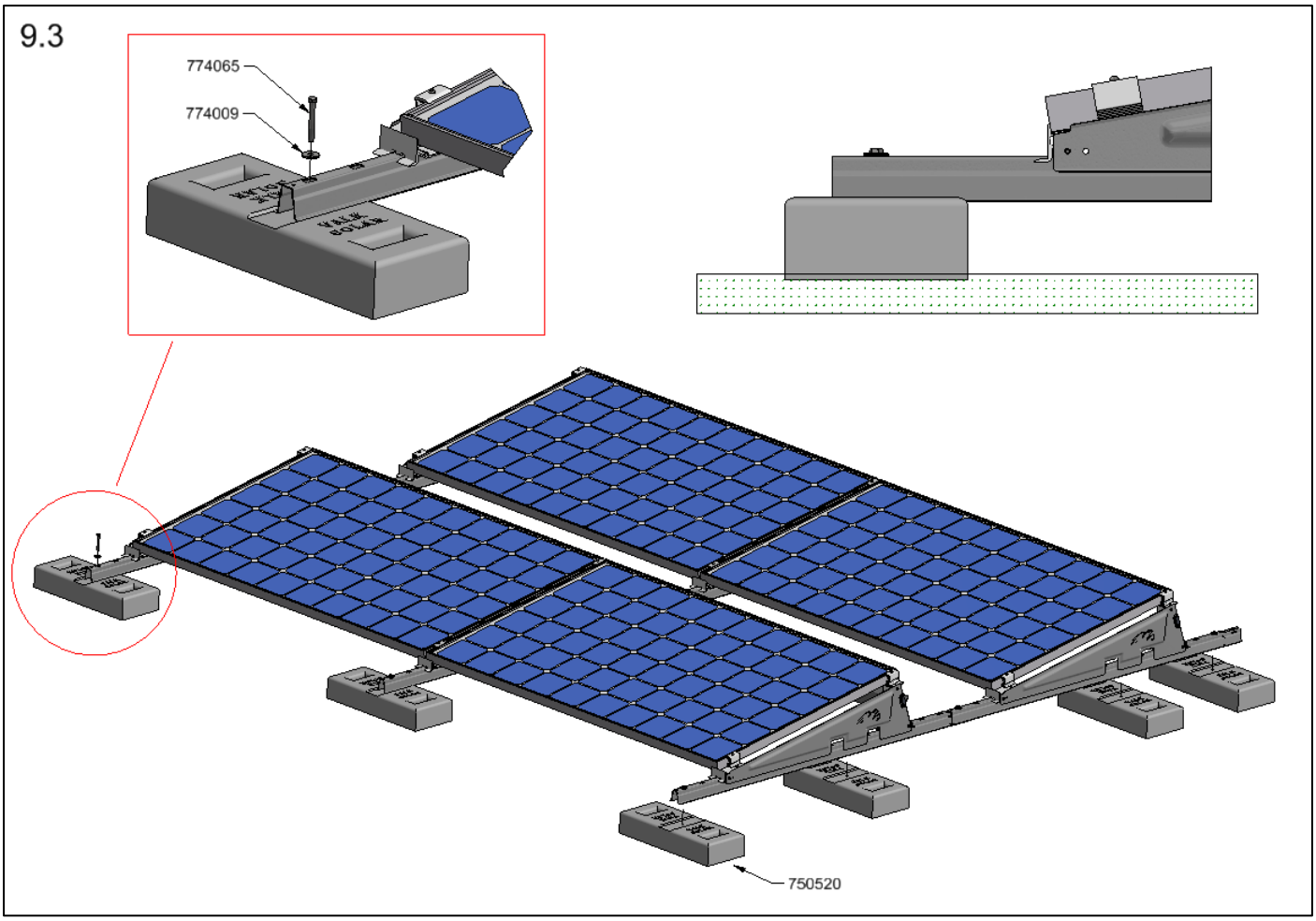

ValkSolarFix

The ValkPro+ system can be mechanical fixed to the roof. This can be done with the ValkSolarFix consoles. These consoles with height of 20mm match perfectly with the roof carriers of the ValkPro+ system. The ValkSolarFix offers various options for the fixation to the roof:

- Toggle anchors for wooden or steel roof structures.
- Concrete anchors for fixation in concrete roof structures
- Roof screws for fixation in wooden roof structures
- Roof screws for fixation in steel plate roof structures
- Roof screws for fixation in aerated concrete

For the detailed installation manuals and videos for ValkSolarFix, please refer to our website: www.valksolarsystems.com.

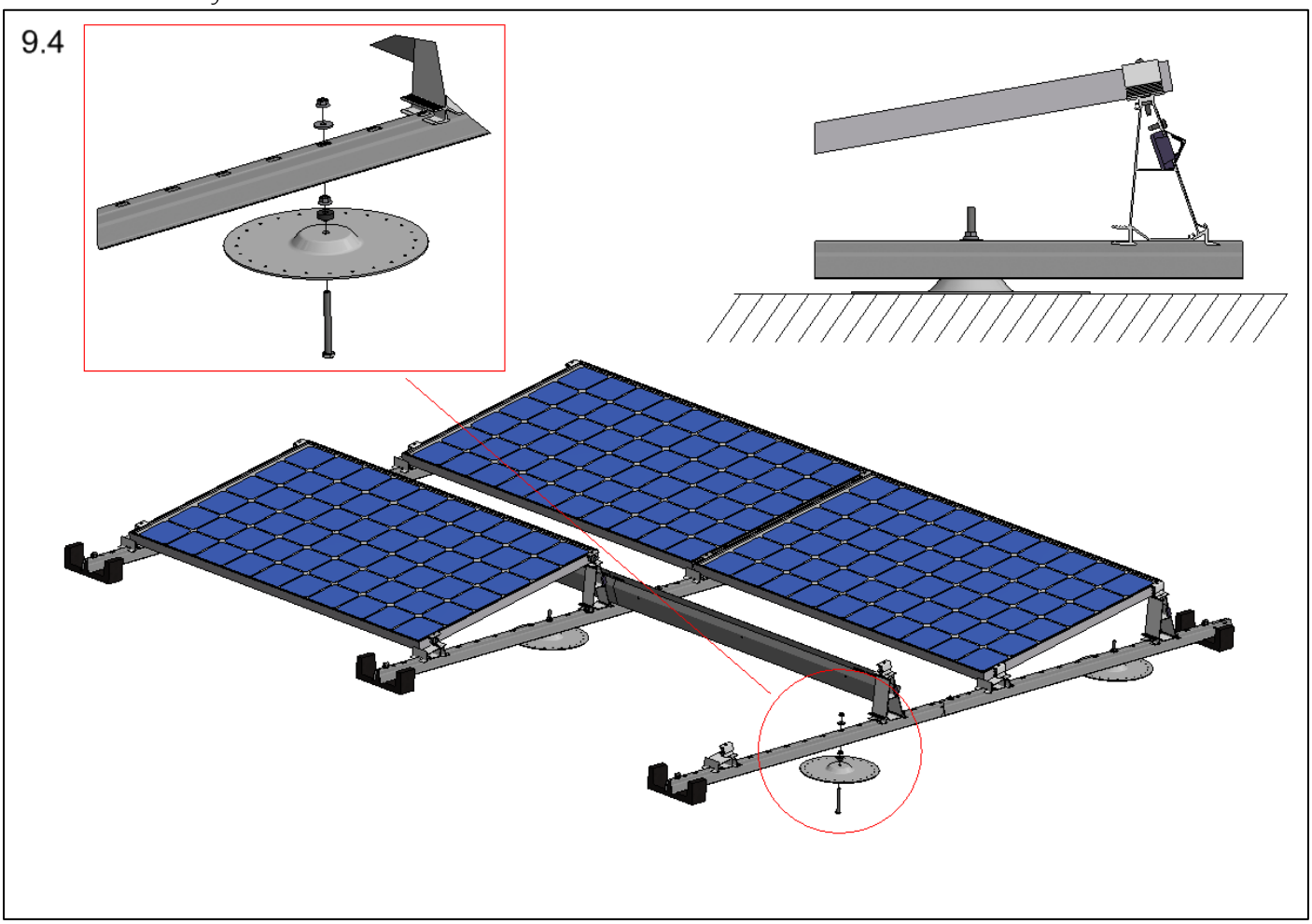

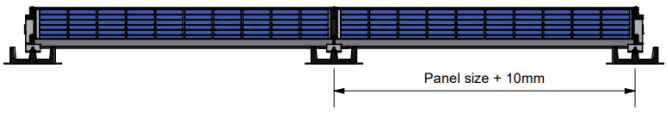

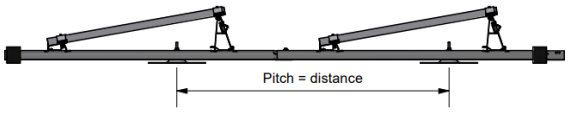

Fixation in combination with Side++ (VP+)

A second option for fixing the ValkPro+ to the roof is to attach the console under the panel. In this case, a Side++ profile is attached to the console, after which the Side++ profile is fixed to the roof carrier profiles on either side of the panel. The Side++ profile should be attached in front of the aluminium rear foot. This is in the first slotted hole from the aluminium rear foot.

To properly attach the Side++ profiles, the corner brackets (729521) should be fitted to the roof carriers on the side of the Side++ profile. The bracket is hooked into the hammerhead chamber of the Side++ profile creating a connection.

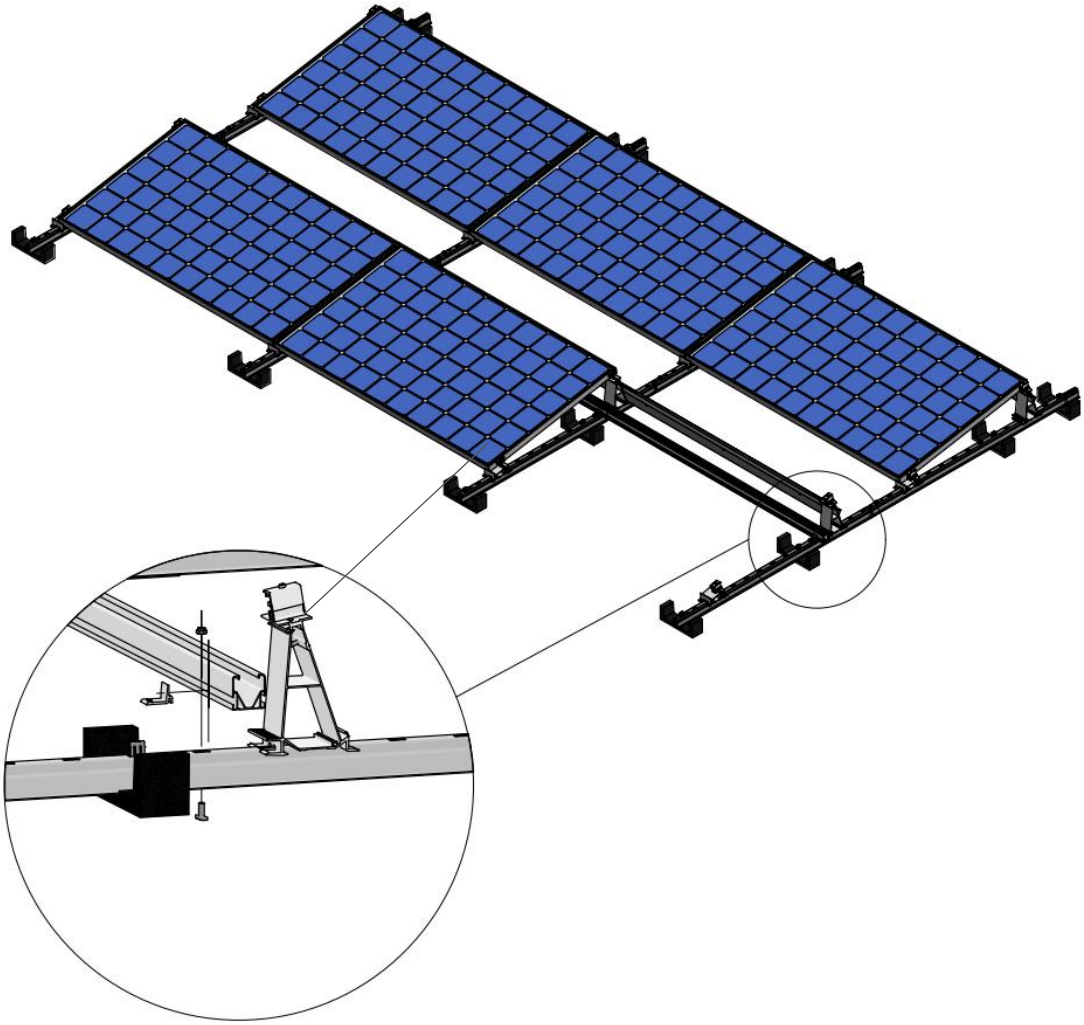

When fitting the hanger bolt clamp (721100), it is important to leave at least 1mm of thread above the clamp.

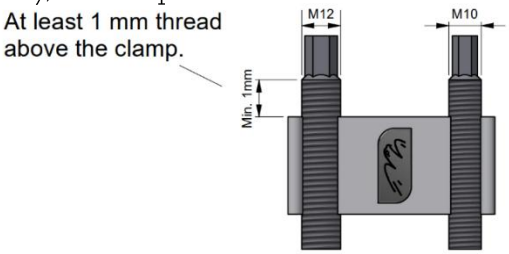

The aluminium profiles are mounted to the console with the hammerhead bolts. The hammerhead bolts are placed in the slots of the profiles. When all bolts are placed in the profile everything is fastened with the nut of the roof hook. (max. torque is 15Nm).

There are 2 options available when mounting the console to the profile, these are the 721100 and the 747895.

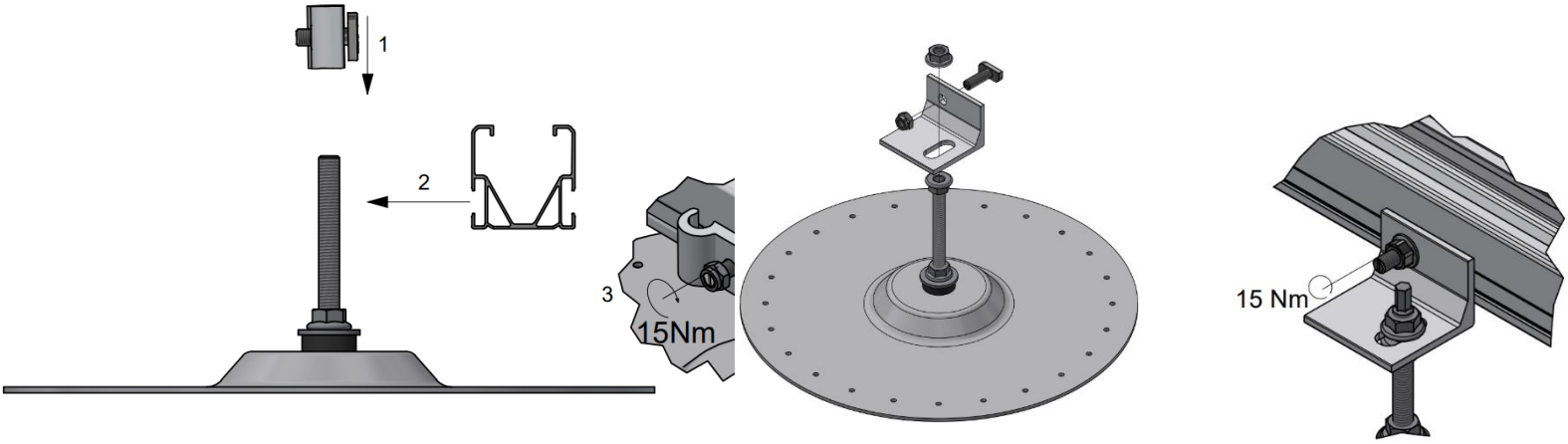

The advantage over fixation to the roof racks is that the fixation can be installed afterwards. This allows more flexibility during installation work. Please note, however, that the maximum forces of the fixation are lower.

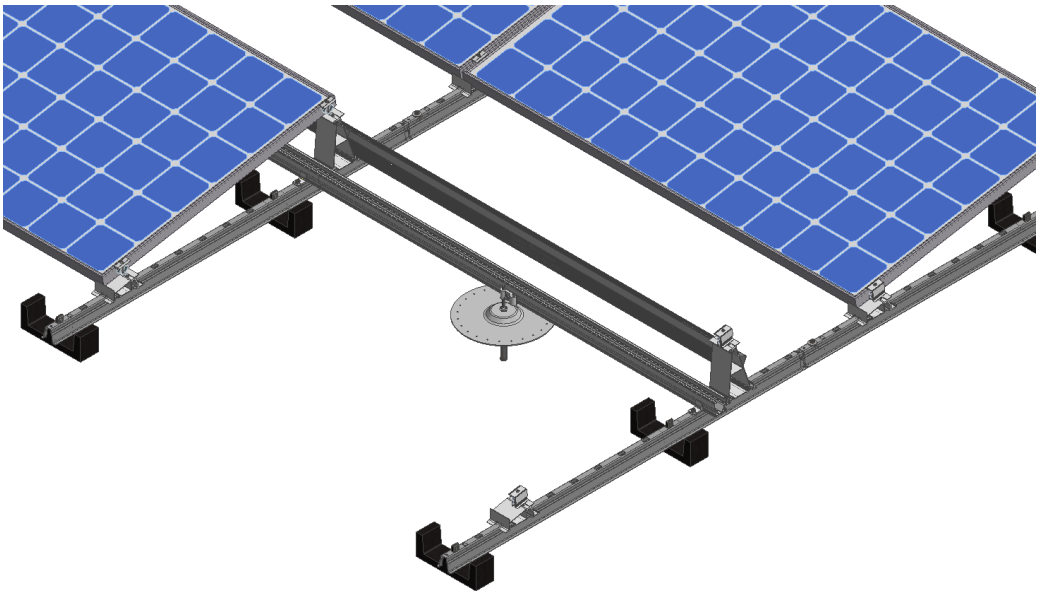

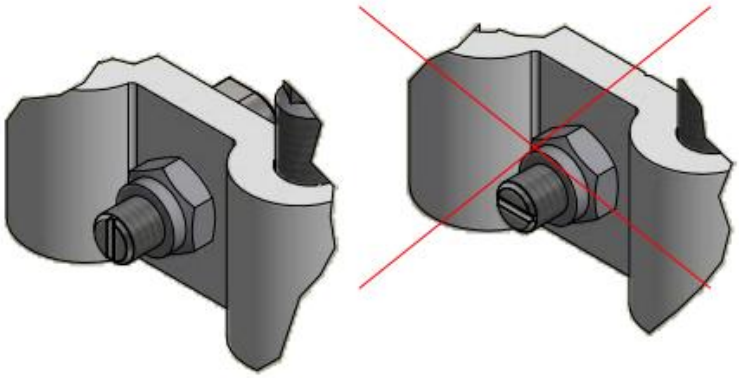

The groove on the hammerhead bolt corresponds with the orientation of the bolt head. Make sure the bolt is always mounted correctly.

Roofs with Lightning Protection System (LPS)

When a PV-system is to be installed on a roof that has a Lightning Protection System (LPS) in place, there are important rules to follow:

Inform the customer of the PV-system prior to installation that additional information is required.

Always get in contact with the installer of the LPS and follow their guidelines. It could be that additional measures need to be taken and the existing LPS or the layout of the PV-system needs to be adapted.

Situation 1

In case the ValkPro+ system is placed within the protection area of the LPS and the separation distance between the ValkPro+ system and the LPS-system is kept (s >50 cm): the substructure of the ValkPro+ system and the LPS should not be connected. Only functional equipotential bonding of the PV-system is required, using 6 mm2 Cu in accordance to EN 62305-3.

Situation 2

In case the PV-system is placed within the protection area of the LPS and the separation distance is not kept (s < 50 cm): the substructure of the PV-system and the LPS must be connected for lightning equipotential bonding, using 16 mm2 Cu or 25 mm2 Al.

Use approved clamps to make the connection between the LPS and the mounting structure of the PV-system. The mounting structure of the PV-system and combination with the clamps must meet the requirements in accordance to IEC 62561-1.

Apply type 1+2 SPDs (Surge Protection Device) on the DC and AC side of the inverter(s) in accordance to IEC 62305-3.

Standards

The information in this leaflet is based on the following international standards:

IEC 60364	Electrical installations for buildings
IEC 62305-3	Protection against lightning - Physical damage to structures and life hazard
IEC 62305-4	Protection against lightning - Electrical and electronic systems within structures
IEC 62561-1	Lightning Protection System Components (LPSC) - Part 1: Requirements for connection components

Decision scheme

Is there a Lightning Protection System (LPS) present on the roof where the PV-system is to be installed?

No → Take care of the required functional equipotential bonding of the PV-system using ≥ 4 mm² Cu.

↓ Yes

Get in contact with the installer of the LPS and follow their guidelines.

↓ Yes

Is the separation distance between the LPS and the PV-system <50cm?

No → The substructure of the PV-system does not need to be coupled with the LPS.

Take care of the required functional equipotential bonding of the PV-system using 6 mm² Cu.

↓ Yes

The substructure of the PV-system MUST be connected to the LPS using certified grounding clamps.

Take care of the required lightning equipotential bonding of the PV-system using 16 mm² Cu or 25 mm² Al.

Apply type 1+2 SPDs (Surge Protection Device) on the DC and AC side of the inverter(s).

Connecting the Lightning Protection System (LPS) to ValkPro+ (Situation 2)

ValkPro+
The ValkPro+ mounting system has a unique base structure of steel roof carriers that are connected by bolts and nuts (no click connections). This is required to make the reliable framework as integrated part of the LPS.

Certification
DEHN has certified the ValkPro+ system in accordance to IEC62561-1. This guarantees that the assembly of the roof carriers and grounding clamps can withstand expected lightning partial currents based on LPL III (100 kA), provided that the system is properly installed in line with the guidelines in the installation manual of the ValkPro+ system from Van der Valk Solar Systems.

The full report is available upon request at Van der Valk Solar Systems.

Installation
For the lightning equipotential bonding 16 mm2 Cu or 25 mm2 Al needs to be used, in combination with approved grounding clamps (DEHN) to make the connection to the ValkPro+ roof carriers. See image below. The clamps are available at Van der Valk Solar Systems under article number Art. 762805 (M10) / Art. 762806 (M8).

Each length of coupled roof carriers needs to be connected at both ends to the LPS. See image on next page.

Please note: the clamp can be mounted using the last slot of the roof carrier. In this position, the rubber tile carrier has to be replaced for a load distributor for this reason. See image below.

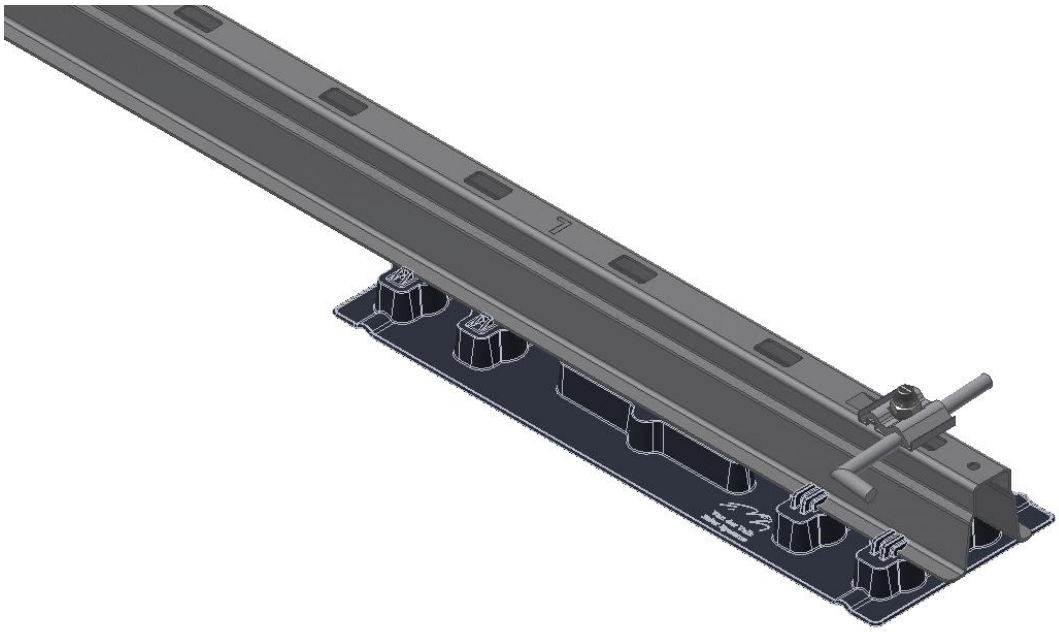

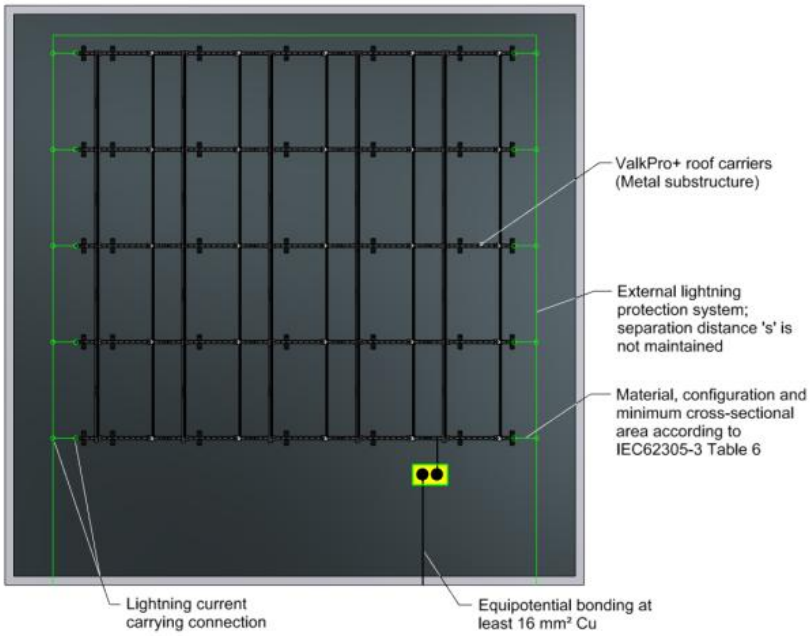

Important!

When connecting the ValkPro+ roof carriers to the LPS, you are obliged to provide the PV inverter(s) on the DC and AC side with type 1+2 SPDs (Surge Protection Device) in accordance to IEC 62305-3 to prevent dangerous sparking and fire.

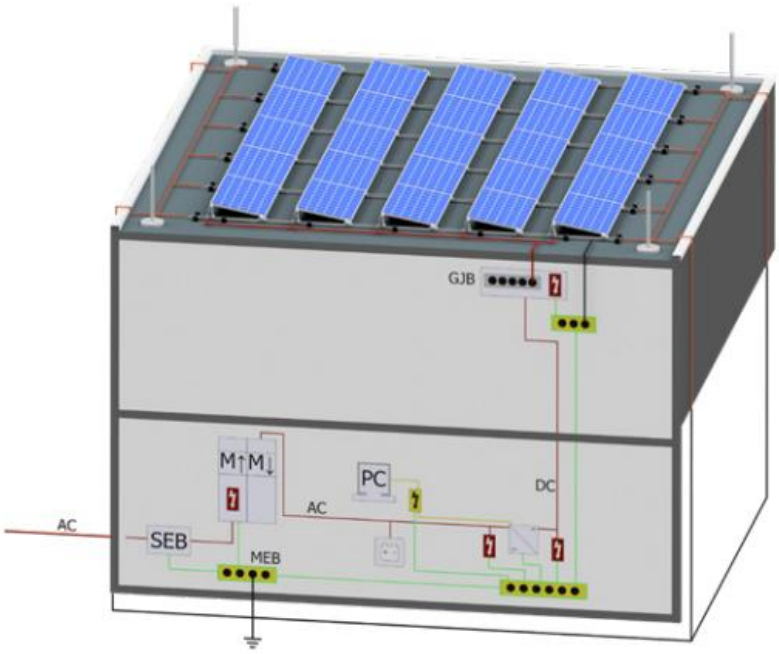

Reliable

With this tested equalization of the lightning partial currents between the LPS and ValkPro+ system and building grounding in combination with matching type 1+2 SPDs, you can be sure of a reliably functioning PV-system in the event of a lightning strike. For more information about ValkPro+, please contact Van der Valk Solar Systems or contact DEHN for information on lightning and surge protection.

Inspection and maintenance of ValkPro+

The ValkPro+ mounting system requires little maintenance over time. It is recommended however to periodically inspect the mounting system for mechanical integrity, correct installation and potential changes in the surroundings.

Caution! When inspecting the PV mounting system on a roof where there is a risk of falling, then fall protection equipment (eg. harness or scaffolding) MUST be used at all times.

Checkpoints and measures

- Check the mounting system for any visible damage and replace any damaged part(s) if needed.
- Check if the ballast tiles are still correctly in place. Any ballast tiles that have been (re)moved from or fallen off the system should be put back in place.
- Check if all side and back plates are still in place and securely fastened. Any loose screws should be tightened.
- Check if the clamps for the solar panels are all in place and correctly fastened. Make sure each clamp has sufficient surface contact with the panel frame. Any clamps not correctly in place or loose, should be adjusted and fastened.
- Check if the steel roof carriers are nowhere in direct contact with the roof surface. Any position where the roof carrier is in direct contact with the roof surface requires an additional tile carrier or load distributor to be placed under the system.
- Check if no parts of the mounting system are in contact with water remaining on the roof for long periods. If this is the case, it is recommended to take measures to prevent water from collecting in positions where the mounting system is placed.
- Check if the electric cables and connectors are still correctly placed in the cable and connector clamps. Any loose cables, cables in contact with the roof surface or ballast tiles, need to be put back in the cable clamps. In case needed, additional clamps need to be placed.
- Check the surroundings for new high buildings or structures adjacent or close to the roof, that were not yet present when the ValkPro+ system was originally installed. In case the height of the new building structure is double the height of the roof on which the mounting system was installed, a new ballast plan needs to be made! Please contact Van der Valk Solar Systems for advice.

Van der Valk Solar Systems

Van der Valk Solar Systems is since 2009 one of the fastest growing companies in the solar industry and focuses entirely on the development and production of solar mounting systems for pitched roofs, flat roofs and open fields. Van der Valk Solar Systems also has an office and warehouse in the UK, offices in Sweden and Spain and is currently active in 13 countries.

Our mounting systems are developed and produced in our own factory in the Netherlands and stand out thanks to their broad area of application, the very short time in which they can be installed, and the high quality. They are developed according to the latest Eurocodes and therefore comply with the requirements defined for solar systems by banks and insurance companies.

Van der Valk Solar Systems is part of family-owned company Van der Valk Systemen, which has been a household name in the field of moving systems and mounting components since 1963.

Our shared industrial complex in the Netherlands consists of 35.000m2 of offices and factory spaces. Here we use modern machinery and the latest technologies to quickly and accurately develop, manufacture, and test products and systems.

Solar mounting systems & cable management

Flat roofs

Pitched roofs

Cable management

CONTACT DETAILS | **DEVELOPER AND PRODUCER OF SOLAR MOUNTING SYSTEMS**

Van der Valk Solar Systems + *International*
Westernesse 18 - 2635 BG Den Hoorn | The Netherlands
+31 174 25 49 99
sales@valksolarsystems.com

Valk Solar Systems UK + *IE*
+44 1304 89 76 58
sales@valksolarsystems.co.uk

Valk Solar Systems Ibérica
+34 910 787 616
ventas@valksolarsystems.es

Valk Solar Systems Nordics
+46 8 555 85 86 26
sales@valksolarsystems.se

www.valksolarsystems.com