NOTES

ALL DIMENSIONS TO BE CHECKED ON SITE.

DO NOT SCALE FROM THIS DRAWING
EXCEPT FOR THE PURPOSES OF LOCAL AUTHORITY PLANNING

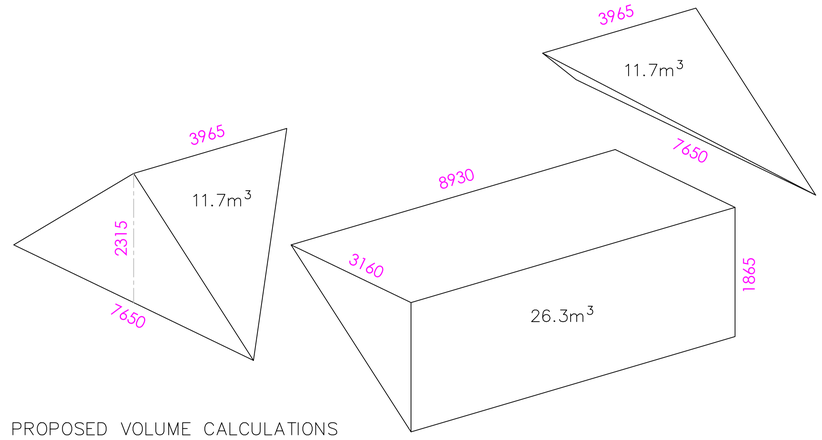

PROPOSED VOLUME CALCULATIONS
=49.7m3

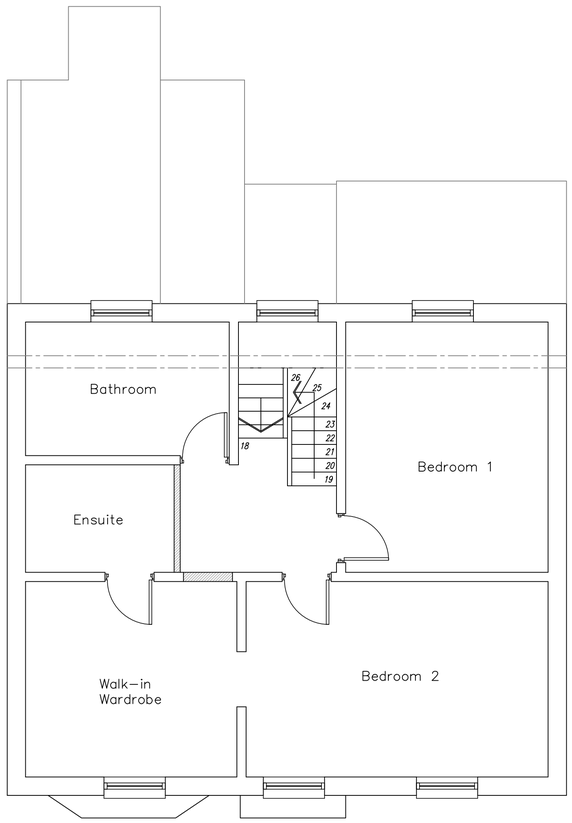

PROPOSED FIRST FLOOR
Scale 1:50 @A1

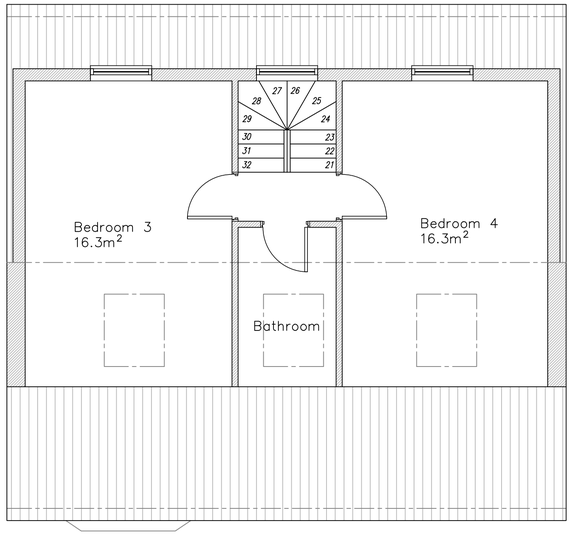

PROPOSED SECOND FLOOR
Scale 1:50 @A1

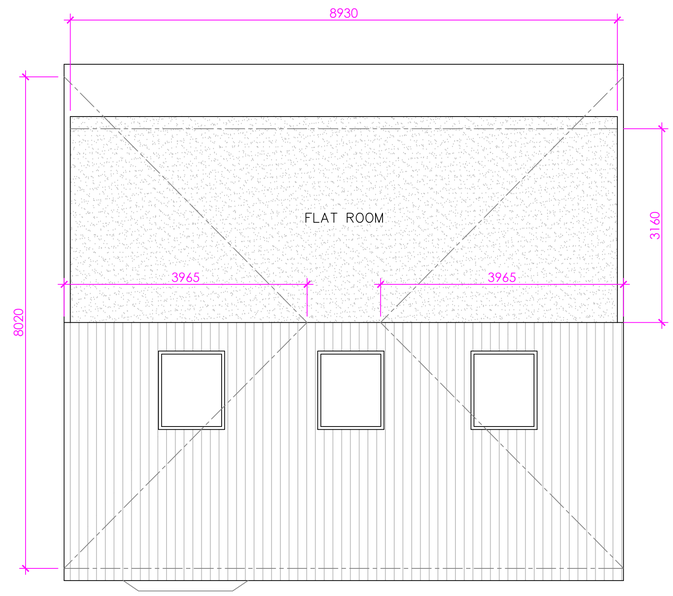

PROPOSED ROOF
Scale 1:50 @A1

REV No.	DATE	REMARKS

yes consulting ltd
E: office@yesconsultingltd.co.uk
T: 07833 327550

Client

Job Title
2 Gladwell Road
London
N8 9AA

Drawing Title
Proposed Plans

Scale

Sheet size A1

Date

Drn. by

Drg. No. PL01

Rev.