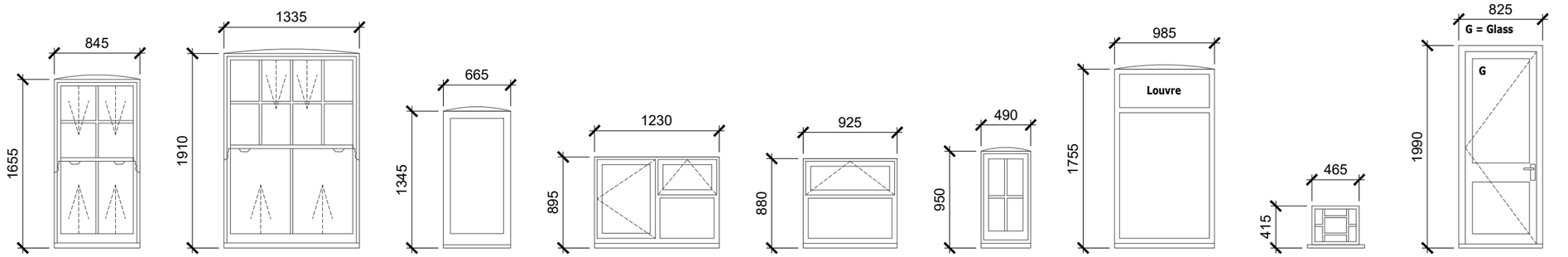

1 Existing Window & Door Schedule

Scale:1:50 @ A3

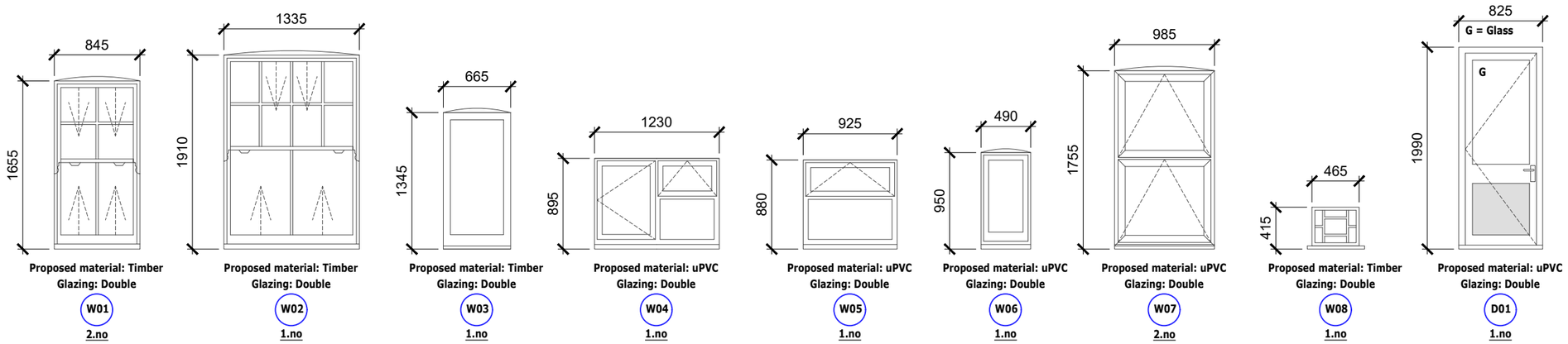

2 Proposed Window & Door Schedule

Scale:1:50 @ A3

Scale Bar 1:50

0 0.5 1 2.5m

Rev	Description	By	QA	DD.MM.YY
P2	W08 added to proposals	TVS	DM	29.04.26
P1	Planning	TVS	DM	23.04.26

© This drawing and any design hereon is the copyright of Potter Raper and must not be reproduced without their written consent. All drawings remain the property of Potter Raper. Figured dimension only to be taken from this drawing. All dimensions to be checked on site. Please inform Potter Raper immediately of any discrepancies before work proceeds.

Client
Wates / Clarion

Project Name
Capital Works 2026 / 27

Project Location
206 Moselle Avenue, Haringey, London, N22 6EX

Sheet Name
Existing and Proposed Window and Door Schedules

Project Status
Planning

Drawing Nr.
12235-PR-MA_206-ZZ-DR-A-PL401

Scale
1:50 @ A3

POTTER RAPER
Duncan House
1A Burnhill Road
Beckenham
Kent
BR3 3LA
Tel: 020 8658 3538