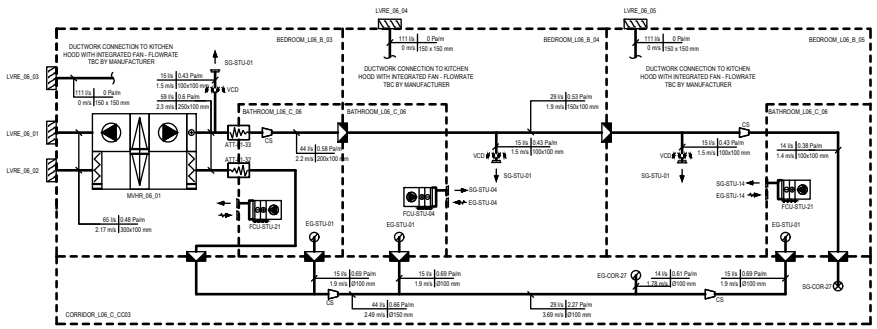

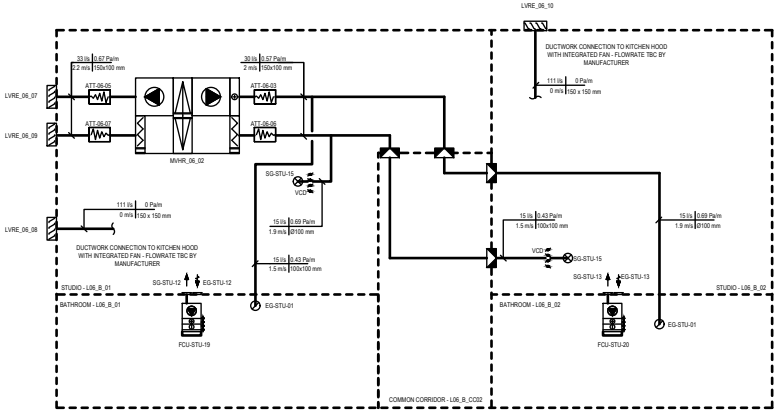

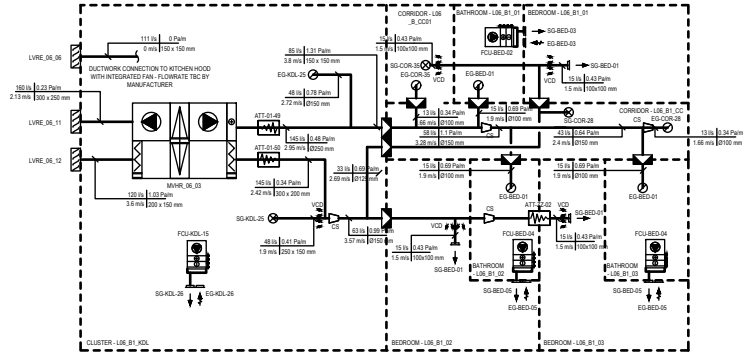

LEVEL 06

NOTES:

1. DO NOT SCALE.
2. ALL DIMENSIONS IN MILLIMETERS.
3. THIS DRAWING IS TO BE READ IN CONJUNCTION WITH ALL OTHER ARCHITECT, STRUCTURAL ENGINEERS & BUILDING SERVICES ENGINEERS DRAWINGS, SPECIFICATIONS & SCHEDULES.
4. ALL DUCTWORK TO BE INSTALLED TO DW144
5. REFER TO EDC SCHEDULES FOR MVHR, EXTRACT FAN, FIRE DAMPER AND ATTENUATION DETAILS/
6. ALL INTAKE AND EXHAUST TERMINATION TO BE A MINIMUM OF 1M APART.
7. REFER TO EDC LAYOUTS FOR DETAILS REGARDING FIRE RATED SMOKE EXTRACT/SUPPLY SYSTEMS.
8. PENETRATION SEALS IN LINE WITH BS 12101-2 TO BE INSTALLED WHERE DUCTWORK PENETRATES FIRE COMPARTMENTS.
10. ALL FCUs TO HAVE 1NO 600MM X 600MM ACCESS PANEL POSITIONED AT THE REAR QUARTER OF THE UNIT FOR FILTER REPLACEMENT.

Rev	Date	Description	Orig	App
C03	29/03/2026	FOR REVIEW	KP	AB

Client
McAleer & Rushe

Project
Printworks

Title
Mechanical Services - Sixth Floor - Ventilation Schematic

Drawing No
179-EDC-B1-ZZ-DR-M-30131

RIBA Work Stage	Status Code	Revision
STAGE 4B	S4	C03

Scale @ A0	Model Manager	Project Manager
NTS	JC	BF

Mechanical & Electrical Consulting Engineers
Cork Office
Tel: +353 (0)21 4280476,
Dublin Office
Tel: +353 (0)1 5180851,
London Office
Tel: +44 (0)203 0300602
www.edcengineers.com
info@edcengineers.com
Limerick Office
Tel: +353 (0)61 315234,
Galway Office
Tel: +353 (0)91 518374,
Wexford Office
Tel: +353 (0)53 9189828,

THIS DRAWING IS THE PROPERTY OF EDC ENGINEERS. NOT TO BE REPRODUCED OR DISTRIBUTED WITHOUT WRITTEN PERMISSION. USE ONLY FOR THE PURPOSE INDICATED. DO NOT SCALE. ALL DIMENSIONS MUST BE VERIFIED ON SITE BEFORE ANY WORK IS CARRIED OUT.