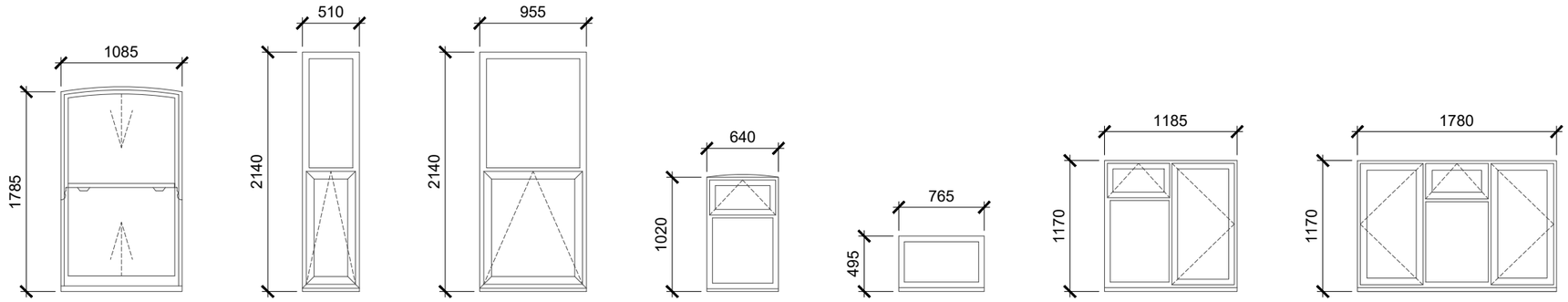

	W01	W02	W03	W04	W05	W06	W07
Existing material	Timber	uPVC	uPVC	Timber	Timber	Timber	Timber
Glazing	Single	Double	Double	Single	Single	Single	Single
	2.no	2.no	1.no	1.no	1.no	1.no	1.no

1 Existing Window Schedule

Scale:1:50 @ A3

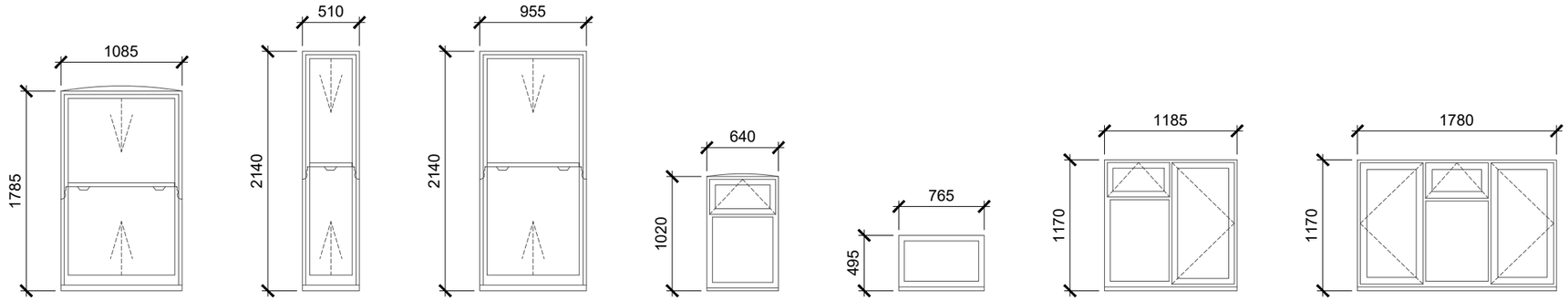

	W01	W02	W03	W04	W05	W06	W07
Proposed material	uPVC	uPVC	uPVC	uPVC	uPVC	uPVC	uPVC
Glazing	Double	Double	Double	Double	Double	Double	Double
	2.no	2.no	1.no	1.no	1.no	1.no	1.no

2 Proposed Window Schedule

Scale:1:50 @ A3

Scale Bar 1:50

0 0.5 1 2.5m

Rev	Description	By	QA	DD.MM.YY
P2	Front elevation windows to be replaced with uPVC vertically sliding windows	TVS	DM	02.06.26
P1	Planning	TVS	DM	13.05.26

© This drawing and any design hereon is the copyright of Potter Raper and must not be reproduced without their written consent. All drawings remain the property of Potter Raper. Figured dimension only to be taken from this drawing. All dimensions to be checked on site. Please inform Potter Raper immediately of any discrepancies before work proceeds.

Client
Wates / Clarion

Project Name
Capital Works 2026 / 27

Project Location
55 Daleview Road, Haringey, London, N15 6PL

Sheet Name
Existing and Proposed Window Schedules

Project Status
Planning

Drawing Nr.
12235-PR-DR_55-ZZ-DR-A-PL401

Scale
1:50 @ A3

POTTER RAPER
Duncan House
1A Burnhill Road
Beckenham
Kent
BR3 3LA
Tel: 020 8658 3538