Blueprint.Vista
Architectural & Engineering Services

T +44 (0) 7973 663 706
E info@blueprintvista.co.uk
W www.blueprintvista.co.uk

Blueprint Vista
442 Staines Road
Hounslow
TW4 5AB

Land between 145-147 Downhills Way N17 6AH
Planning Ref: HGY/2021/3223

The following pages provide information which seeks to discharge Condition 8.

Note:

The left side of the access is being used.

The applicant shall be responsible for carrying out and funding any remedial, repair, or strengthening works required to make good any damage to the access arising from construction activities associated with the development, including the use of construction and delivery vehicles.

CAPITAL TRANSPORT PLANNING

Final Construction Logistics Plan

145-147 Downhills Way, Wood Green

July, 2023

Capital Transport Planning is a Transport Planning and Highways consultancy, specialised in assisting clients through the planning process. Our transport consultant has vast transport planning experience acting on behalf of clients to overturn refused planning applications, providing documents to support planning applications, working on the behalf of Highway Authorities within a County Council and London Borough Council.

Prepared for:

UK Bauhaus Ltd

Prepared by:

Capital Transport Planning LTD

Michael Okubajo BSc, MSc, MTPS, MCHIT

M.Okubajo

Transport Consultant
Construction Logistics Practitioner (00232)

Revision History

Project and Document Details

Project Name	**145-147 Downhills Way**
Project No	00267
Document Title	Final Construction Logistics Plan

Document History

Rev	Amendments	Prepared By	Date
First Issue	N/A	MO	03/07/2023

This report is to be regarded as confidential to the client and it is intended for their use only and may not be assigned. Consequently, and in accordance with current practices, any liability to any third party in respect of the whole or any part of its contents is hereby expressly excluded. Before the report or any part of it is reproduced or referred to in any document, circular or statement and before its contents or the contents of any part of it are disclosed orally to any third party, our written approval as to form and context of such a publication or disclosure must be obtained.

Table of Contents

1. Introduction ..... - 1 -
2. Context, considerations and challenges ..... - 3 -
3. Construction programme and methodology ..... - 7 -
4. Vehicle routing and site access ..... - 9 -
5. Strategies to reduce impacts 11
6. Control of Dust, Noise and Vibration 14
7. Estimated vehicle movements 19
8. Implementing, monitoring and updating 22

Appendix A – CONSTRUCTION PROGRAMME GANNT CHART 24
Appendix B – Local Engagement Letter 25
Appendix C – CONSIDERATE CONSTRUCTION SCHEME 26
Appendix D - NRMM 27

List of Figures and Tables

Table. 1 Construction Programme
Table 2. Planned Measures Checklist
Table 3. Number of vehicles in peak phase (By phase)
Table 4. Number of vehicles in peak phase (including overlaps)

Figure 1. Regional Context Plan
Figure 2. Local Context Plan
Figure 3. Site Boundary Plan
Figure 4. Construction Vehicle Routing - Regional
Figure 5. Construction Vehicle Routing - Local
Figure 6. Construction Site Plan
Figure 7. Swept-Path Analysis
Figure 8. Total number of vehicles through construction programme
Figure 9. Number of vehicles by type during peak of phase
Figure 10. Number of vehicles by types during peak of phase

1. Introduction

1.1. This Final Construction Logistics Plan (CLP) has been prepared by Capital Transport Planning on behalf of Arch Planning/Licensing (the agent) for the proposed development at 145-147 Downhills Way in the London Borough of Haringey.

1.2. This Final CLP has been prepared in accordance with Transport for London's (TfL) Construction Logistics Plan guidance and with reference to Haringey's guidance on construction logistics.

1.3. This logistics plan will be treated as a working document and requires input from various stakeholders.

1.4. The key elements that we have considered to produce the document are:

- Traffic management
- Pedestrian routes
- Site security
- Personnel Access
- Vehicle Access
- Welfare facilities and accommodation

Site Context

1.5. The application site is located to the east of central Wood Green N17 6AH. The application site is located on Downhills Ways (B155), which is a B-classified road under the jurisdiction of the Local Highway Authority (LHA). The site is located approximately 1 miles east of Wood Green underground station.

Development Proposal

1.6. It is proposed that all existing structures within the site are to be demolished and four new residential dwellings are to be constructed.

1.7. The site achieves a PTAL rating of 3 (Moderate) using Transport for London's (TfL) WebCAT tool and no off-street car parking is to be provided.

Hours of Operation

1.8. Standard hours construction hours will be as per Haringey council's permissible hours for noisy works:

- 08:00 to 18:00 hours Monday to Friday
- 08:00 to 13:00 hours Saturday
- No noisy activities on site at any time

1.9. Operations that need to be undertaken outside of standard working hours will be agreed with Haringey Council with notice being provided to the neighbours at least 14 days ahead of these activities occurring or on the day for extenuating circumstances. TfL will be informed of any implications for the Transport for London Road Network.

1.10. Parking suspensions are not expected to be required during construction.

Site Specific Objectives

1.11. The site-specific objectives of the site during construction are:

- Working considerately and not causing disruption to residents in the immediate vicinity of the site;
- Minimising the impact on parking and the local highway network;
- Minimise any impact to bus services operating on Downhills Way (B155);
- Minimise any impacts or disruption to Saint Benet Fink Church;

CLP Structure

(2) Context, considerations and challenges
(3) Construction programme and methodology
(4) Vehicle routing and site access
(5) Strategies to reduce impacts
(6) Estimated vehicle movements
(7) Implementing, monitoring and updating

CLP Co-ordinator Details

Name: Pat Nathen
Job Title: Construction Manager
Contact Number: 07810484447
E-mail Address: pat@bauhaus.co.uk
Company: UK Bauhaus Ltd

2. Context, considerations and challenges

Policy Context

National Planning Policy Framework (NPPF)

2.1. The NPPF promotes the use of sustainable transport throughout the UK, safe road design, and the efficient and sustainable delivery of goods and supplies. The NPPF sets out the long-term strategy for sustainable development.

Traffic Management Act (2004)

2.2. Part 2 of the Traffic Management Act sets out the responsibility of local authorities to manage traffic networks within their geographical area of responsibility. This includes efficient use of the network and the requirement to take measures to avoid contributing to traffic congestion. Part 5 outlines the responsibility of local authorities in Greater London to manage the strategic route network. This includes TfL's role to manage certain areas of the Greater London route network.

The London Plan (2021)

2.3. Policy T4 of the Plan requires the submission of CLPs to ensure construction is safer, cleaner and makes efficient use of the road network, including through the use of non-road modes wherever available.

'When required in accordance with national or local guidance,179 transport assessments/statements should be submitted with development proposals to ensure that impacts on the capacity of the transport network (including impacts on pedestrians and the cycle network), at the local, network-wide and strategic level, are fully assessed. Transport assessments should focus on embedding the Healthy Streets Approach within, and in the vicinity of, new development. Travel Plans, Parking Design and Management Plans, Construction Logistics Plans and Delivery and Servicing Plans will be required having regard to Transport for London guidance.'

The Mayor's Transport Strategy (MTS) (2018)

2.4. The MTS promotes the use of CLPs as a 'travel plan that aims to improve the sustainability of construction freight movements by establishing site management and procurement processes to reduce the impact of construction traffic on the street network.

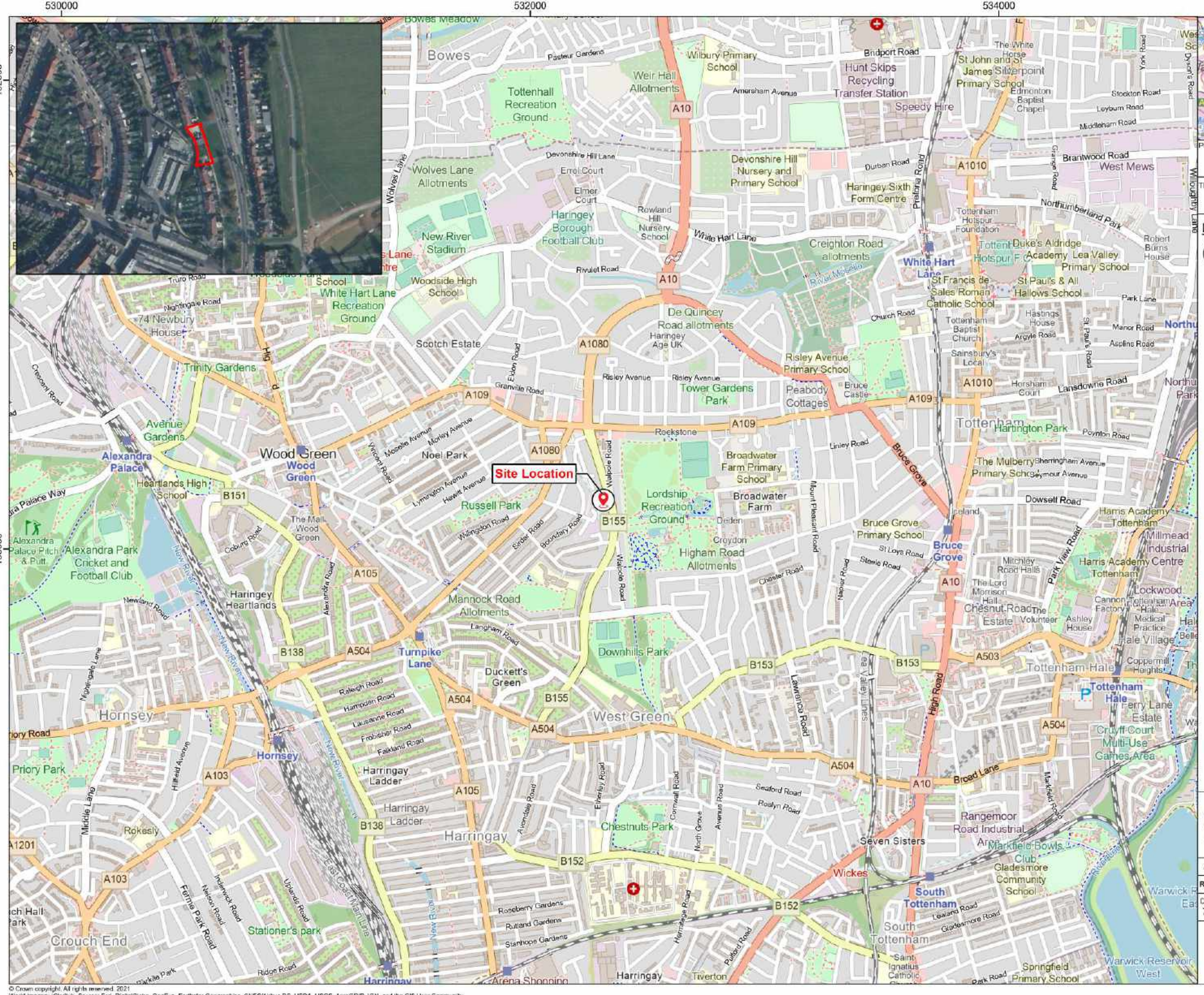
530000
532000
534000
192000
190000
Site Location
Bowes
Tottenhall Recreation Ground
Weir Hall Allotments
Wilbury Primary School
Hunt Skips Recycling Transfer Station
Speedy Hire
St John and St James Silverpoint Primary School
Wolves Lane Allotments
Devonshire Hill Nursery and Primary School
Haringey Sixth Form Centre
Haringey Borough Football Club
New River Stadium
Woodside High School
White Hart Lane Recreation Ground
Creighton Road allotments
White Hart Lane
Tottenham Hotspur Foundation
Tottenham Hotspur F.C.
Duke's Aldridge Academy
Lea Valley Primary School
St Paul's & All Hallows School
St Francis de Sales Roman Catholic School
De Quincey Road allotments
Haringey Age UK
Scotch Estate
Trinity Gardens
Risley Avenue Primary School
Tower Gardens Park
Peabody Cottages
Tottenham Hartington Park
Avenue Gardens
Alexandra Palace
Wood Green
Heartlands High School
Noel Park
Russell Park
Broadwater Farm Primary School
Lordship Recreation Ground
Broadwater Farm
Higham Road Allotments
Bruce Grove Primary School
Bruce Grove
Harris Academy Tottenham
Harris Academy Centre Tottenham
Alexandra Palace Cricket and Football Club
Haringey Heartlands
Mannock Road Allotments
Downhills Park
Turnpike Lane
Duckett's Green
Hornsey
Priory Park
Harringay Ladder
Harringay
West Green
Chestnuts Park
Rangemoor Road Industrial Area
Markfield Bowls Club
Gladesmore Community School
Seven Sisters
Wickes
South Tottenham
Tottenham Hale
Cruyff Court Multi-Use Games Area
Crouch End
Stationer's park
Arena Shopping
Tiverton
Springfield Primary School
Warwick Reservoir West
A10
A1010
A109
A1080
A105
A504
A503
A103
A1201
B151
B155
B138
B153
B152
Bridport Road
Brantwood Road
Northumberland Park
Tottenham High Road
Broad Lane
Lea Valley Lines
Seven Sisters Road
Bruce Grove
Wood Green High Road
Green Lanes
Hornsey Lane
Crouch Hill
Harringay Station
Tottenham Hale Station
Bruce Grove Station
South Tottenham Station
Seven Sisters Station
Wood Green Station
Turnpike Lane Station
Alexandra Palace Station
Hornsey Station
Harringay Station
Arena Shopping Station
Tiverton Station
Tottenham Hale Station
Bruce Grove

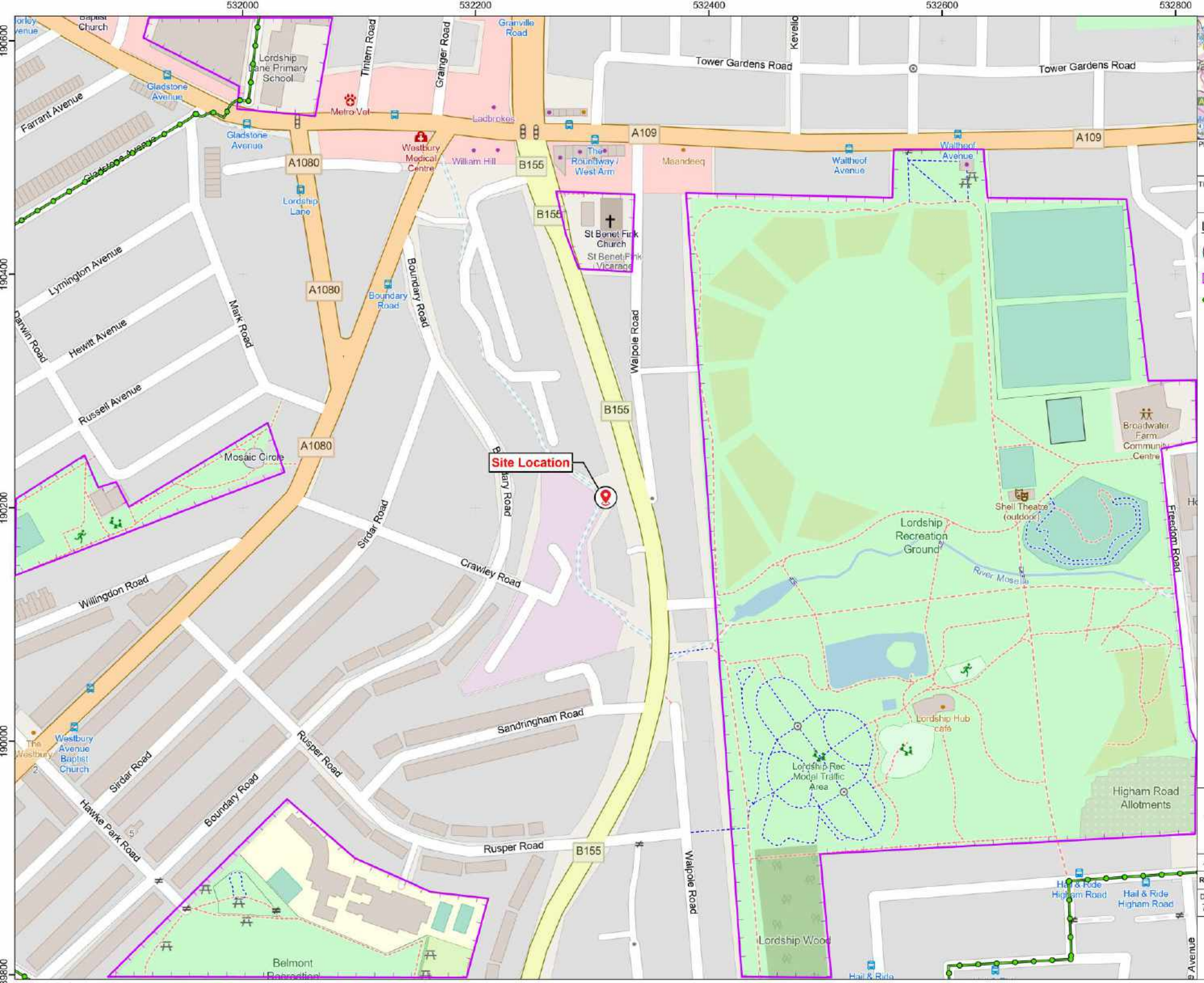

PROJECT:

145-147 Downhills Way, N17 6AH

TITLE:

Local Context Plan

Legend:

- Site Location
- Community Considerations
- Cycle Routes

Figure 2.

Capital Transport Planning
Email: michael@capitaltp.co.uk

Rev	Date	Purpose of Revision	Drawn
A	25/10/2021	Initial Issue	DR

Drawing Reference:
702427

0 25 50 100 Metres

SCALE: 1:3,000

ISO A3

DO NOT SCALE

© Crown copyright. All rights reserved. 2021
OpenStreetMap: Map data © OpenStreetMap contributors, Microsoft, Esri Community Maps contributors, Map layer by Esri
This plan is provided for illustrative purposes only and we do not accept any liability for any decisions made from this drawing.

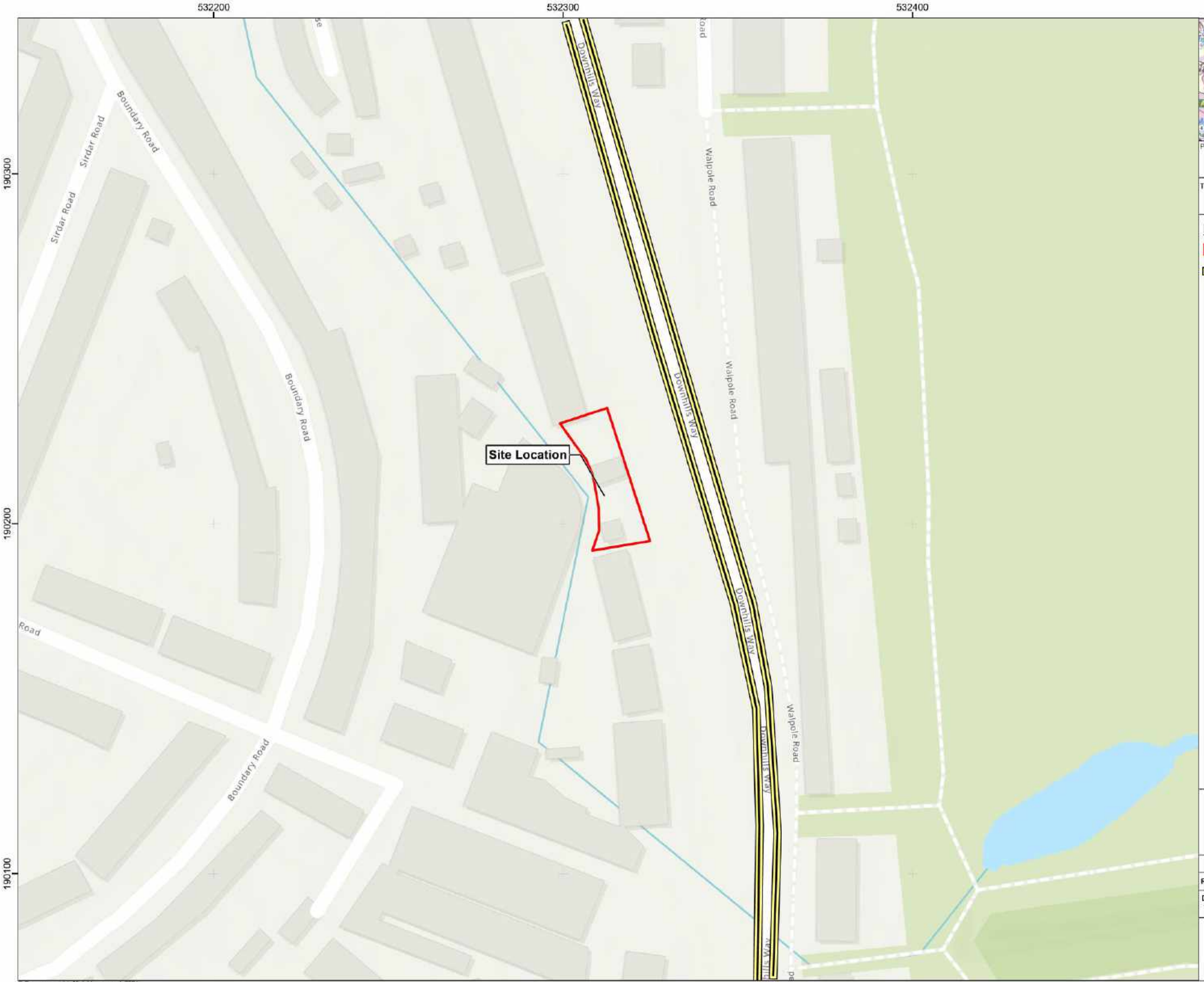

PROJECT:

145-147 Downhills Way, N17 6AH

TITLE:

Site Boundary Plan

Legend:

- Site Boundary
- Double Yellow Line

Figure 3.

Capital Transport Planning
Email: michael@capitaltp.co.uk

Rev	Date	Purpose of Revision	Drawn
A	08/11/2021	Initial Issue	DR

Drawing Reference:
702427

0 5 10 20 Metres

SCALE: 1:1,000

ISO A3

DO NOT SCALE

© Crown copyright, All rights reserved 2021
World Topographic Map: Esri Community Maps Contributors, Esri UK, Esri, HERE, Garmin, INCREMENT P, METI/NASA, USGS
World_Hillshade: Sources: Esri, Airbus DS, USGS, NGA, NASA, CGIAR, N Robinson, NCEAS, NLS, OS, NMA, Geodatastyrelsen, Rijkswaterstaat, GSA, Geoland, FEMA, Intermap and the GIS user community
This plan is provided for illustrative purposes only and we do not accept any liability for any decisions made from this drawing.

Healthy Streets

2.5. The Healthy Streets document makes specific reference to CLPs: 'Construction phase of any development will have an impact on the surrounding community, including safety, environmental and congestion impacts on the road network. Impact varies depending on the size, timescale and location of the development'.

Vision Zero

2.6. An approach to road danger reduction that works towards the elimination of road traffic, deaths and serious injuries by reducing the dominance of motor vehicles on London's streets.

Context Maps

2.7. The required TfL regional, local context plans and site boundary plan are presented in Figures 1, 2 and 3.

Local Access Including Highways, Public Transport, Cycling and Walking

Highways, carriageways and footways

2.8. The application site is located on Downhills Way which adjoins Lordship Lane (A109) to the north and Bellmont Road to the south (A503). Adequate footways are provided on egress of the application site towards Wolsey Avenue.

Railway/Underground

2.9. The site is located approximately 1 mile to the east of Wood Green underground station, which is a 20-minute walk from the application site. Wood Green underground station is on the Piccadilly Line and provides access between Heathrow and Cockfosters.

2.10. The site is also located 0.8 miles north-east of Turnpike Lane underground station, which is a 16-minute walk from the application site. Turnpike Lane is located on the underground station is on the Piccadilly Line and provides access between Heathrow and Cockfosters.

Bus Routes

2.11. The site benefits from a bus services within walking distance. The closest being the The Roundway West Arms bus stops. Both bus stops are within 4-minute walking distance and provides access to the bus 123 and 243.

2.12. The site is also located approximately 0.3 miles to the east of the Boundary Road bus stop, which is a 6-minute walk from the site access. The bus stops provide access to the bus 123, 217, 231, 444 and 617.

Cycling

2.13. There are no well-established cycle routes in the immediately vicinity of the application site.

Considerations and Challenges

2.14. From experience, the success of any project relies on a robust logistics plan and a strong site management team with controlled supervision. The contractor welcomes input from Haringey borough council, local businesses, residents and Ward Members should alternatives be proposed.

2.15. The following community considerations have been acknowledged and presented in Figure 2.

- Local amenities on Lordship Lane;
- Minimise any impacts or disruption to Saint Benet Fink Church;
- Working in conjunction with local businesses;
- Managing site deliveries/collections whilst ensuring the neighbouring residents' daily arrangements are not affected by the works.

3. Construction programme and methodology

3.1. Capital Transport Planning has developed an indicative construction programme from information provided by UK Bauhaus Ltd. The construction programme is presented below in Table 1 and Gannt Chart supplied by UK Bauhaus Ltd is presented in Appendix A.

Table 1. Construction Programme

Construction phase	Start	End
Site setup and demolition	Jul-2023	Jul-2023
Basement excavation and piling	Jul-2023	Aug-2023
Sub-structure	Aug-2023	Aug-2023
Super-structure	Sep-2023	Nov-2023
Cladding	Jan-2024	Jan-2024
Fit-out, testing and commissioning	Nov-2023	Jul-2024

Site setup and demolition

3.2. Subject to securing planning permission and necessary highway licenses, site preparations are expected to begin in July 2023. Demolition works are relatively minimal and are forecasted to generate approximately an average of 1 HGV per day removing materials from the site. Delivery vehicles will be loaded and unloaded within the site boundary or in the dedicated loading and unloading area. This is expected to take no longer than one month to complete.

Basement excavation and piling

3.3. Piling works will be undertaken at the application site and are not considered to be extensive, however foundation works are likely to generate significant levels of delivery and collection trips. This phase is forecasted to take up to two months, which will overlap with the previous phase of the construction works.

Sub-structure

3.4. The construction works relating to the substructure of the building including any retaining structures and foundation will begin in August. The phase overlaps with the basement, excavation and piling phase, however begins to build up on the retaining walls beams. Substructure works are not expected to last for longer than one month.

Super-structure

3.5. Larger vehicles will continue to be required at this stage of construction, delivering materials required to construct the super-structure. The super-structure will be over a number of separate buildings and at this stage it is not known if this will be simultaneously. It is forecasted that the super-structure works would be carried out up to three months.

Cladding

3.6. Façade deliveries will vary in size due to the different elements of façade required. The type of cladding has not yet been finalised, however. As previously noted the flats will be delivered over a number of building Deliveries will be well organised and ensure lorries are fully loaded to reduce the number of deliveries required. This will ensure that deliveries are carried out efficiently. This phase of construction is forecasted to take up to one month to be completed.

Fit-out testing and commissioning

3.7. This phase of construction will involve deliveries of materials such as metal framing, plasterboard, plastering materials, ceiling materials, mechanical materials, electrical materials, flooring materials, painting and decoration etc. During the last few months of the project, there will be a high volume of smaller vehicles for snagging, furnishing and inspections at the site. This will involve the use of small vans compared to earlier stages of the construction. The fit-out stage of construction is forecasted to take up to nine months.

Waste Removal/Skips

3.8. Skip collections and drop-off will be required throughout the entire construction the project. It is not proposed that any skips will be located on the public highway. Recycling and waste collection will be on site throughout the project and will be collected on a requested basis and undertaken from within the site.

4. Vehicle routing and site access

4.1. The most appropriate construction vehicle route from the site has been considered and proposed in this section of the report.

4.2. The primary route for construction and delivery vehicles is to approach the site from the north. Construction vehicles would approach the site from the strategic road network, in this case the A406 North Circular Road. Vehicles would leave the A406 onto the A10 Great Cambridge Road. Vehicles would continue southbound on the A10 until turning right on to the A1080 The Roundway. Vehicles would continue southbound on The Roundway (A1080) and continue south across Lordship Lane on to Downhills Way (B155). Vehicles would continue southbound on Downhills Way before arriving at the site.

4.3. It is proposed that construction vehicles would primarily leave the site and head towards the strategic road network in the same route as arrival.

4.4. The proposed construction and delivery vehicle routing plans are presented in Figures 4 and 5.

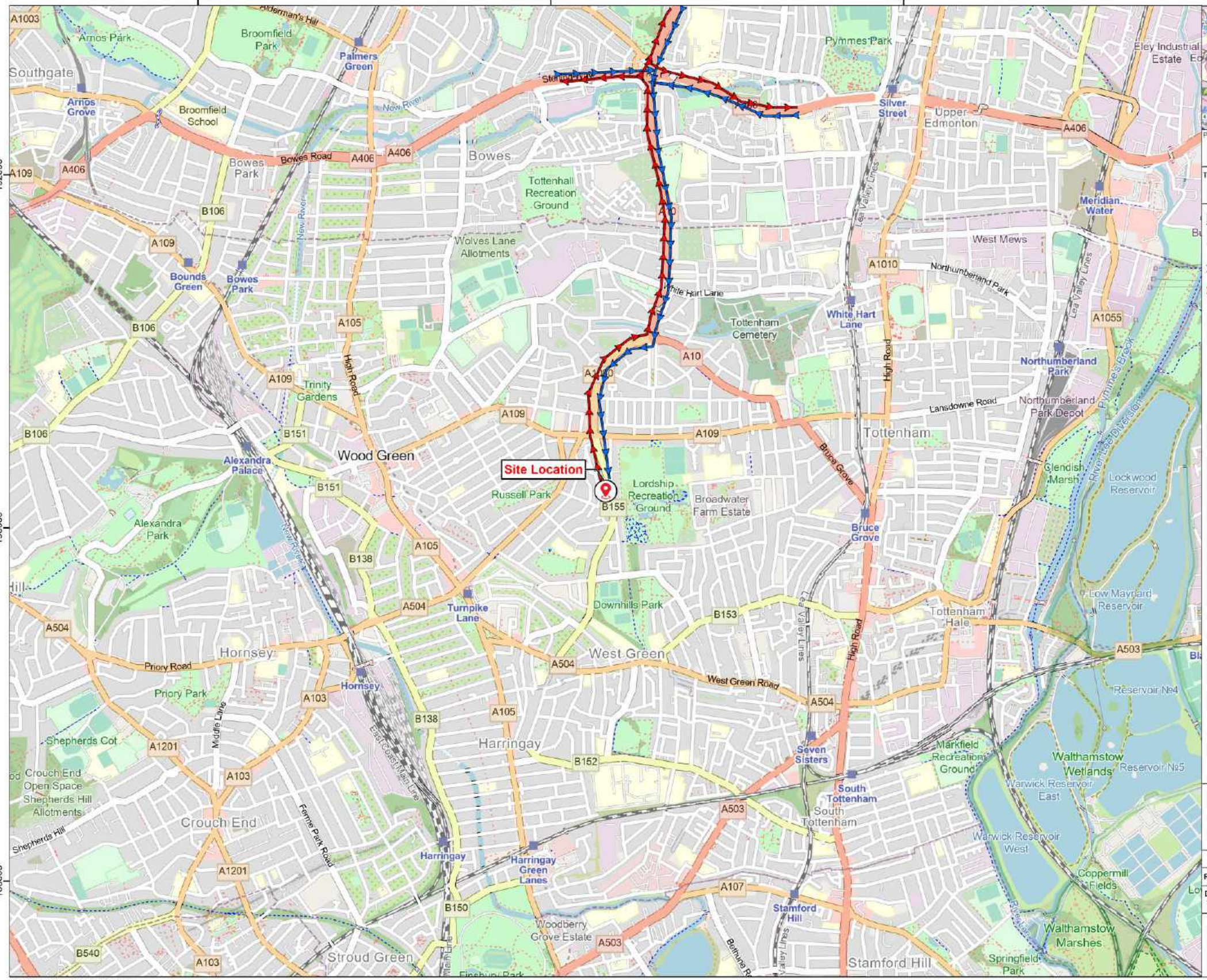

PROJECT:

145-147 Downhills Way, N17 6AH

TITLE:

Regional Plan with Construction Vehicle Routing

Legend:

- Site Location
- Arrival Route
- Departure Route

Figure 4.

Capital Transport Planning
Email: michael@capitaltp.co.uk

Rev	Date	Purpose of Revision	Drawn
A	09/11/2021	Initial Issue	DR

Drawing Reference:
702427

0 125 250 500 Metres

SCALE: 1:20,000

ISO A3

DO NOT SCALE

© Crown copyright. All rights reserved. 2021
OpenStreetMap: Map data © OpenStreetMap contributors, Microsoft, Esri Community Maps contributors, Map layer by Esri
This plan is provided for illustrative purposes only and we do not accept any liability for any decisions made from this drawing.

532000 532200 532400 532600 532800

190600 190400 190200 190000 189800

Baptist Church
Lordship Lane Primary School
Gladstone Avenue
Farrant Avenue
Metro-Vel
Tintern Road
Grainger Road
Granville Road
Ladbrokes
Tower Gardens Road
Kevelio
Westbury Medical Centre
William Hill
The Roundway / West Arm
Maandeep
Waltheof Avenue
A109
A1080
B155
Lordship Lane
St Benet Fink Church
St Benet Fink Vicarage
Lymington Avenue
Darwin Road
Hewitt Avenue
Mark Road
Boundary Road
Walpole Road
Russell Avenue
Mosaic Circle
Site Boundary
Broadwater Farm Community Centre
Shell Theatre (outdoor)
Lordship Recreation Ground
River Moselle
Freedom Road
Sirdar Road
Crawley Road
Willingdon Road
Sandringham Road
Rusper Road
The Westbury
Westbury Avenue Baptist Church
Hawke Park Road
Lordship Hub café
Lordship Rec Model Traffic Area
Higham Road Allotments
Hail & Ride Higham Road
Belmont Recreation
Lordship Wood
Avenue

PROJECT:

145-147 Downhills Way, N17 6AH

TITLE: **Local Context Plan with Construction Vehicle Routing**

Legend:

- Site Location
- Departure Route
- Arrival Route
- Cycle Routes
- Community Considerations

Capital Transport Planning
Email: michael@capitaltp.co.uk

Rev	Date	Purpose of Revision	Drawn
A	09/11/2021	Initial Issue	DR

Drawing Reference: 702427

0 25 50 100 Metres

SCALE: 1:3,000

ISO A3

DO NOT SCALE

© Crown copyright. All rights reserved. 2021
OpenStreetMap: Map data © OpenStreetMap contributors, Microsoft, Esri Community Maps contributors, Map layer by Esri
This plan is provided for illustrative purposes only and we do not accept any liability for any decisions made from this drawing.

Accessing the Site

4.5. There is an existing gated vehicular access to the site from Downhills Way. It is proposed that delivery vehicles would reverse into the site with assistance of banksmen from the carriageway to the designated loading and unloading area.

4.6. Welfare facilities for construction workers and visitors will be provided within the site. Facilities for waste and recycling will be located within the site and collected on a request basis to be organised by site operatives.

4.7. Wheel washing facilities will be provided within the site and located by the site exit. Site operatives will inspect vehicles leaving the site, in order to prevent deposits of mud or debris on the public highway.

4.8. The proposed location for the loading and unloading area, hoarding, traffic marshals, banksmen, welfare area, location for a skip, storage of materials and plant is presented in Figure 6 and swept-path analysis in Figure 7.

4.9. It should be noted that the application site is located in an accessible location with a PTAL rating of 3 (moderate). Site operatives will be instructed to either pool to the site or arrive via sustainable modes.

Key:

- Site boundary
- Main Construction site
- Loading Area
- 12 yd Skip 3.7m L x 1.76m W X 1.68m H
- Site welfare
- Recycling/Waste Storage Area
- Wheel Washing Facility
- Site Hoarding
- Plant and Material Storage

0 5 10

TRANSPORT PLANNING SPECIALISTS

PROJECT: 145-147 Downhills Way, N17 6AH	DRAWN BY: SA	SCALE: AS SHOWN	SHEET: 1 of 1
DRAWING TITLE: Construction Site Plan	DATE: July 2023	DRAWING No: CT-DHW-SP-01	REVISION: P02

©copyright and ownership of this drawing is retained by Capital Transport Planning

A3

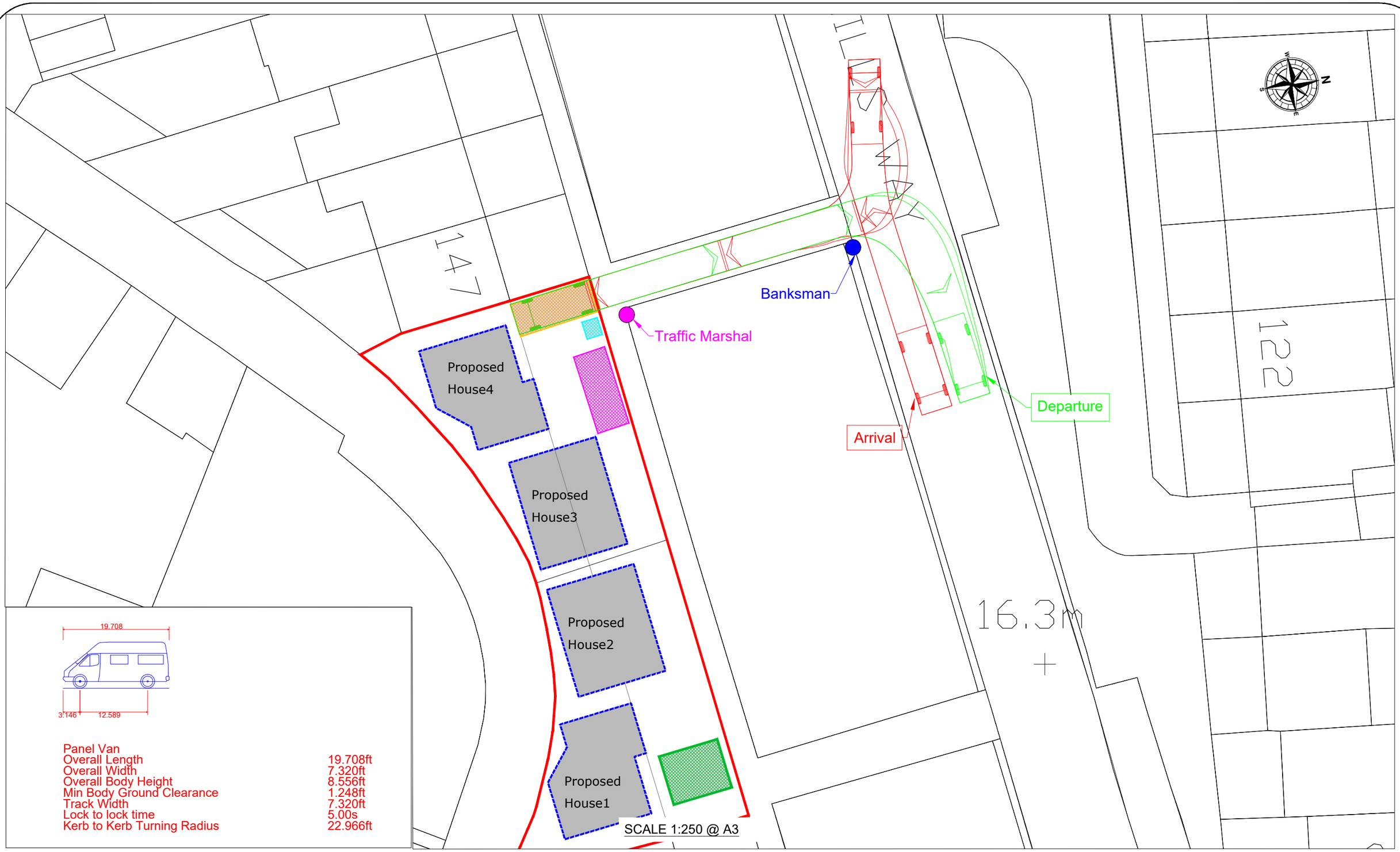

Panel Van	
Overall Length	19.708ft
Overall Width	7.320ft
Overall Body Height	8.556ft
Min Body Ground Clearance	1.248ft
Track Width	7.320ft
Lock to lock time	5.00s
Kerb to Kerb Turning Radius	22.966ft

NOTES:

Maneuver will be assisted by the banksman shown on the plan.

0 5 10

TRANSPORT PLANNING SPECIALISTS

PROJECT:
145-147 Downhills Way, N17 6AH

DRAWING TITLE:
SWEPT PATH ANALYSIS

DRAWN BY:
SA

DATE:
OCT 2021

Rev	Date	Description
-	-	-

SCALE: AS SHOWN

SHEET: 1 of 1

DRAWING No: --------

REVISION: - - -

A3

©copyright and ownership of this drawing is retained by Capital Transport Planning

5. Strategies to reduce impacts

5.1. The table below sets or the planned measures that are considered to be practical for this site and can either already be committed to, are proposed or being considered.

Table 2. Planned Measures Checklist

Measure	Committed	Proposed	Considered
Measures influencing construction vehicles and deliveries			
Safety and environmental standards and programmes	X		
Adherence to designated routes	X		
Delivery scheduling	X		
Re-timing for out of hours deliveries	X		
Re-timing for out of peak deliveries		X	
Use of logistics and consolidation centres		X	
Measures to encourage sustainable freight			
Freight by Water			X
Freight by Rail			X
Material procurement measures			
DfMA and off-site manufacture			X
Re-use of material on site	X		
Smart procurement	X		
Other measures			
Collaboration amongst other sites in the area	X		
Implement a staff travel plan			X

Safety and Environmental Standards and Programmes

5.2. The contractor and subcontractors will be required to adhere to several contractual agreements, in line with TfL's Guidance for Developers. The contractor will be required to comply with TfL's '*Standard for construction logistics: Managing work related road risk (WRRR)*'

FORS and CLOCS

5.3. All vehicle and driver management practices will be required to comply with the FORS and Construction Logistics and Community Safety (CLOCS).

5.4. FORS Silver will need to be confirmed by all subcontracted transport/haulage providers that the contractor intends to use from the start of construction. Any vehicles found in breach of this are in breach of the CLP and enforcement action can be taken as necessary.

Collision Reporting

5.5. All collisions and accidents involving the projects' vehicle and drivers will be reported to the Project Manager and relevant parties.

5.6. Within 15 days of the contract variation date, the contractor will provide the authority with a collision report. The contractor shall provide the authority with an updated collision report on a quarterly basis or within 5 days of a written request.

Adherence to Designated Routes

5.7. The route plan will be given to all suppliers when orders are placed to ensure drivers are fully briefed on the required route to take. The supplier will be made aware that these routes are required followed at all times unless agreed or alternative diversions are in place.

Delivery Scheduling

5.8. Due to the scale of the development and the projected number of deliveries, it is proposed that a booking delivery system will be used to manage deliveries of materials, plant and equipment to the site.

5.9. All deliveries and collections must be booked 24 hours in advance and will be considered on a first come first served basis. Permitted delivery hours are between 09:30 and 14:30 only.

5.10. All special deliveries to the site that require licensing (e.g. tower crane and piling rigs) would be delivered outside of standard hours in accordance with the conditions of the licence therefore avoiding any unnecessary closures and minimising disruption to the public highway.

Retiming for out of peak deliveries

5.11. Wherever possible the contractor will schedule deliveries to avoid the network peaks.

Use of Logistics and Consolidation Centres

5.12. Due to the scale of the development, it is not considered viable or beneficial to use logistics and consolidation centres.

DfMA and off-site manufacture

5.13. Due to the scale of the development, it is not considered beneficial to manufacture elements of the development off-site.

Re-use of materials on site

5.14. The contractor will be required to investigate opportunities to minimise waste and where waste generation is unavoidable, to maximise the recycling and reuse potential of demolition and construction materials.

Smart Procurement

5.15. The contractor will investigate the use of local suppliers wherever possible to minimise the length of journeys associated with deliveries. Opportunities to source materials and equipment from the same supplier will be sought to reduce vehicle movements.

Collaboration amongst other sites in the area

5.16. Where possible, the site manager for the proposed development, will seek to collaborate with other sites in the area in regard to consolidation of deliveries and other efficiency saving measures.

Implement a Staff Travel Plan

5.17. This is not required due to the low number of staff onsite.

Local Engagement

5.18. Engagement with local residents has been ongoing and the letter of notification of the upcoming works is presented in Appendix B.

6. Control of Dust, Noise and Vibration

6.1. The property is not adjacent to any sensitive properties and is in a residential area. The nature of the proposals means that no special measures are necessary for the ordinary consequences of project execution. Instead, this Plan includes measures to practicably mitigate those ordinary consequences from such activities and as a matter of good practice:

Control of Nuisance & Dust

6.2. The contractor will have in place Health & Safety and Environmental procedures to ensure that the site team is fully aware of all those who may be affected by the work and to put in place control measures to minimise any nuisance or inconvenience.

6.3. *The contractor shall use best practice measures to minimise dust and air quality impacts from the works.*

6.4. Effective planning and management of dust control requires a thorough understanding of the construction programme, the operations and their likely impact due to the changing weather conditions. The control measures that will be introduced reflect the site team's knowledge of the programme and site operations to combat dust.

6.5. The contractor will attempt to work in such a way that emissions to the air of dust and pollutants are minimised and that best practicable means are used to avoid creating a statutory nuisance.

6.6. Measures to be considered for limiting emissions and avoiding nuisance from machines and vehicles on site will include one or more of the following as appropriate and as far as reasonably practicable:

Vehicles

- Ensuring that the engines of all vehicles and plant on site are not left running unnecessarily to prevent exhaust emissions and noise;
- Using low emission vehicles and plant fitted with catalysts, diesel particulate filters or similar devices;
- Requiring that all plant will be well maintained, with routine servicing of plant and vehicles to be completed in accordance with the manufacturers recommendations and records maintained for the work undertaken;
- Requiring that all project vehicles, including off-road vehicles, will hold current MOT certificates where required due to the age of the vehicle, and that they will comply with exhaust emission regulations for their class;
- Avoiding the use of diesel or petrol powered generators and using mains electricity or battery powered equipment;
- Ensure all vehicles carrying loose or potentially dusty material to or from site are fully sheeted;
- Sweep public roads regularly when potential traffic movements containing soil, spoil, hardcore, concrete etc. are being taken in or out of the site;
- Ensure that all dust generating materials transported to and from site are covered by tarpaulins.

Plant and Materials

6.7. NRMM on all sites within either the Central Activity Zone or Canary Wharf (CAZ/CW) are required to meet Stage IIIB of EU Directive 97/68/EC as a minimum. n inventory of all Non-Road Mobile Machinery (NRMM) will be registered on the NRMM register: https://nrmm.london/usernrmm/ register prior to the commencement of use of any NRMM.

- Ensure that any crushing or grinding machine/tools used on site has an appropriate permit issued and is maintained appropriately.
- All steel beams and columns will be cut on the manufacturer warehouse and assembled onsite.
- To minimise the nuisance of dust generated by the other construction operations the following operational constraints will be implemented:
- Construction methods will be reviewed to limit the generation of dust i.e. wet cutting in lieu of dry cutting where practicable;
- Plant and equipment to be selected to minimise the generation of dust,
- Dust migration to adjoining properties to be restricted by the use of debris netting fixed to all the perimeter fences;
- Where materials are mixed on site, ensure these works are undertaken in designated areas;

- Ensure that sand and other aggregates are stored on bunded areas and are not allowed to dry out;
- Only use cutting, grinding or sawing equipment fitted or in conjunction with suitable dust suppression techniques such as water sprays or local extraction;
- Minimise drop heights from conveyors, loading shovels, hoppers and other loading or handling equipment and use fine water sprays on such equipment wherever possible.

Environmental

- Ensure no burning of waste materials takes place on site;
- Ensure an adequate water supply on the site;
- Ensure deposal of run-off water from dust suppression activities;
- Minimise the amount of excavated material held on site;
- Sheet, seal or damp down unavoidable stockpiles of excavated material held on site;
- Ensure water suppression is used during demolition operations;
- Use enclosed rubble shoots and conveyors where reasonably practicable or use water to suppress dust emissions from such equipment;
- Sheet or otherwise enclose loaded skips or bins;
- Seal or re-vegetate completed earthworks as soon as reasonably practicable after completion;
- Use design/prefabrication to reduce the need for grinding, sawing and cutting on site wherever reasonably practicable;
- Ensure slopes on stockpiles are no deeper than the natural angle of repose of the material and maintain a smooth profile;
- Ensure equipment is available on site to clean any spillages and clean spillages as soon as possible after the event using wet cleaning methods.
- Record any exceptional incidents causing dust episodes on or off the site and the action taken to resolve the situation;

6.8. In case of work extending to the summer, and during very dry conditions, consideration would be given to suspension of soil handling operations if wind speeds give rise to dust generation that could cause a nuisance to dust sensitive locations in the vicinity of the site, particularly during dry and windy conditions. Being aware of the impact of dust creating operations is key to good dust management. Having good communications, including on-site inductions, toolbox talks, notices, site briefings to staff are therefore essential.

6.9. The monitoring of operations with even minor potential to cause airborne dust emissions will be regularly undertaken by the Project Manager or his appointed representative. This will predominantly take the form of personal visual assessments. All findings, including the prevailing weather conditions, will be recorded in a log book kept specifically for recording site conditions and events. As a minimum, entries in the log book would be made at least daily. The hoarding will be 2m high to reduce to minimum amount of dust and work as a high noise barrier from the site.

Noise and Vibration Impact

6.10. *The developer shall use best practice measures in line with the CoPCS to minimise noise & vibration from the works.* Noise reduction is to controlled using best practice:-

- All plants/equipment are to be the most modern available for the work;
- All breakers are muffled;
- Sequence of demolition & construction to provide noise and dust barrier to vulnerable facades;
- No shouting;
- No stereos;
- Any vehicle alarms will be broadband or white noise type sounders and will have the volume reduced or disabled following a risk assessment;

6.11. The use of radios or other audio equipment anywhere on site by our subcontractors will be strictly prohibited and additionally any noisy or offensive language will not be tolerated and any offenders will be immediately removed from site.

6.12. All plant that operates on the site will be fitted with noise suppression equipment such that noise levels do not develop over 85db 1m beyond the perimeter of the works. The type of plant, equipment and construction techniques are to be selected to reduce noise production. As part of the planning process for the works and to ensure that noise is kept to a minimum, the following points will be utilised to reduce the effects of noise on site.

6.13. Vibration will be minimised by best practicable means i.e. crushing instead of breaking method and minimise the use of impact breakers. All reasonable measures will be taken by during demolition works to prevent mud being deposited on the site access road and the main road.

Rodents

6.14. Rodent traps will be placed strategically across the site to prevent any migration of any potential rodents from the site. Should any rodents be captured, they will be disposed of in accordance with best practice and latest health and safety guidance.

Monitoring and Reporting Noise

6.15. Site main contractor and site manager appointed by the developer will monitor the noise and vibration on site and will take appropriate action if the noise/vibrations exceed the acceptable levels. This will be monitored by a digital sound level meter. The levels will be monitored twice a day (morning and afternoon), when agreed levels are likely to be exceeded, upon receipt of a substantial claim, and at the request from the LPA/EHO. Our site manager will be working with this equipment and will monitor and compare the noise levels to ensure they do not exceed. If the levels were to exceed, then where practicable and necessary, the above measures will be taken. Main contractor and developer will hold a neighbours meeting and have let them know the details of who to contact if the vibration and noise levels were to cause disruption.

7. Estimated vehicle movements

7.1. The number of average vehicle movements has been estimated using the TfL toolkit and are summarised in Tables 3 and 4 below.

Table 3. Number of vehicles in peak phase (By phase)

Construction phase	Period of stage	No. of trips (monthly)	Peak no. of trips (daily)
Site setup and demolition	Q3 2023 - Q3 2023	25	1
Basement excavation and piling	Q3 2023 - Q3 2023	35	1
Sub-structure	Q3 2023 - Q3 2023	40	2
Super-structure	Q3 2023 - Q4 2023	45	2
Cladding	Q1 2024 - Q1 2024	25	1
Fit-out, testing and commissioning	Q4 2023 - Q3 2024	55	2
Peak period of construction	Q4 2023 - Q4 2023	85	3

7.2. Table 3, presents the number of vehicles in a peak phase throughout the project. Table 3, suggests that the peak number of monthly trips will be 110, occurring within Q4 of 2023.

Table 4. Number of vehicles in peak phase (including overlaps)

Construction phase	Period of stage	No. of trips (monthly)	Peak no. of trips (daily)
Site setup and demolition	Q3 2023 - Q3 2023	60	2
Basement excavation and piling	Q3 2023 - Q3 2023	75	3
Sub-structure	Q3 2023 - Q3 2023	75	3
Super-structure	Q3 2023 - Q4 2023	85	3
Cladding	Q1 2024 - Q1 2024	70	3
Fit-out, testing and commissioning	Q4 2023 - Q3 2024	85	3

7.3. Table 4, presents the number of vehicles in a peak phase throughout the project including overlaps. Table 4, suggests that the peak period for construction related vehicles will be between Q4 of 2023 and Q3 of 2024.

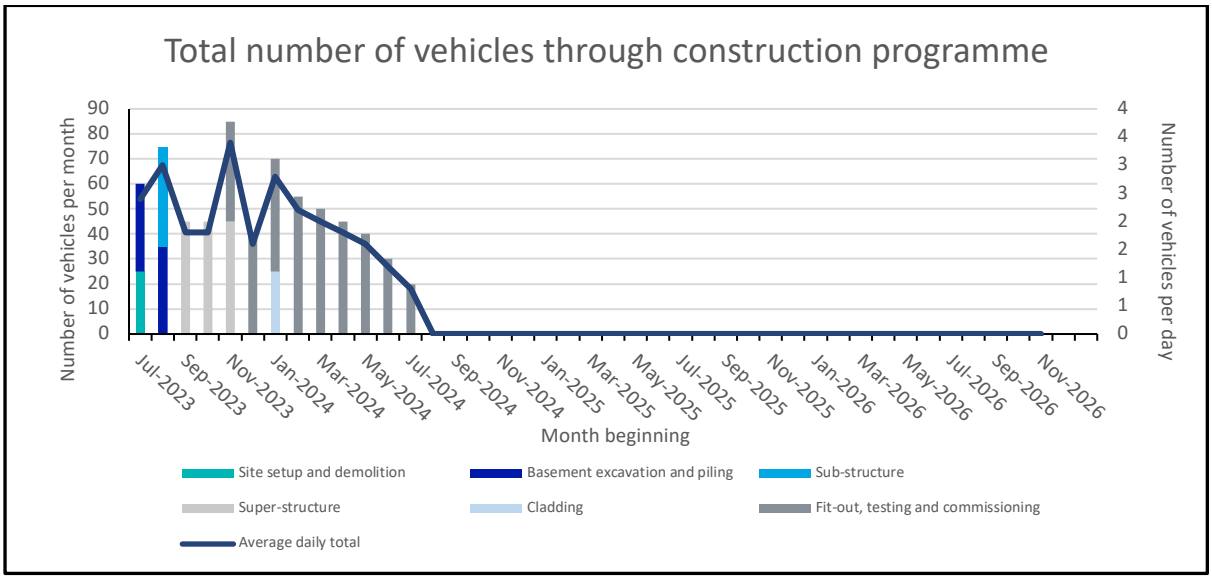

Figure 8. Total number of vehicles through construction programme

7.4. Figure 8, presents the total number of vehicle through the proposed construction programme. The graph demonstrates that peak vehicles per month will occur around October 2023 with approximately 80 vehicles.

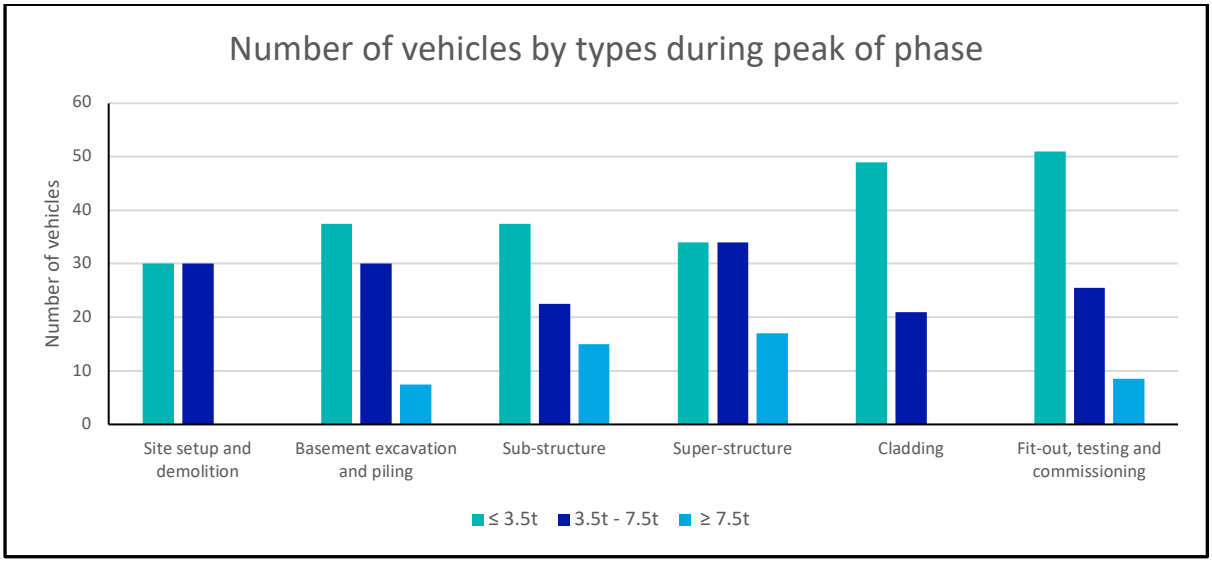

Figure 9. Number of vehicles by type during peak of phase

7.5. Figure 9, presents the number of construction related vehicles by type of vehicle throughout the phases. The types of vehicles are categorised by less than 3.5tn, 3.5tn to 7.5tn and above 7.5tn. Figure 9, demonstrates that larger vehicles will be in use towards the beginning and mid periods of the project, with smaller vehicles required towards the end of the construction.

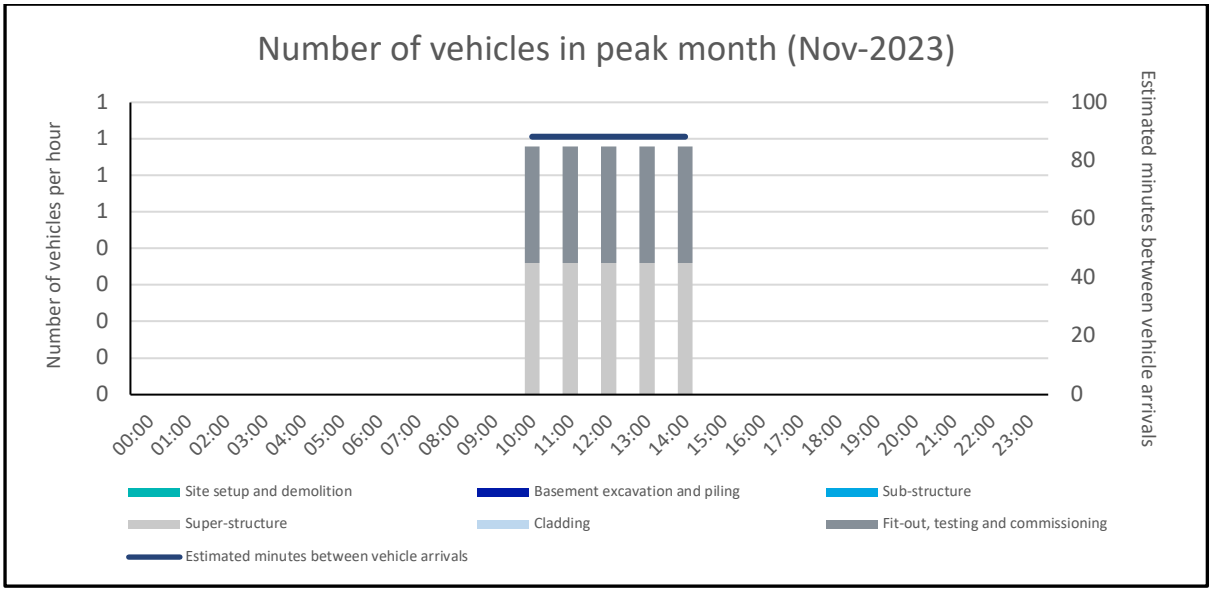

Figure 10. Number of vehicles by types during peak of phase

7.6. Figure 10, presents the number of vehicle by types during peak of phase. The graph also demonstrates the commitment to keep all construction related vehicles and deliveries between the hours of 10:00 and 14:00.

8. Implementing, monitoring and updating

8.1. This Final CLP will be implemented, monitored and updated by Pat Nathen of Bauhaus who has been appointed Construction Logistics Plan Co-ordinator and will be in charge of implementing the Detailed CLP.

8.2. Pat Nathen (CLP Co-ordinator) will record the following information to assist with the monitoring of the CLP:

- Job title and Construction Logistics Practitioner ID number of the people responsible for approving and implementing the CLP.
- Data (the format of the data will depend on the extent and capability of the monitoring tools used)
- Contractors' handbook
- Drivers' handbook

8.3. Pat Nathen (CLP Co-ordinator) will collect the following information and data:

Number of vehicle movements to site:

- Total vehicle, rail or barge movements
- By vehicle type/size/age
- Time spent on site
- Consolidation centre utilisation
- Origin and destination of vehicle, barge or train arriving at or leaving site (or wharf/railhead in use)
- Delivery/collection accuracy compared to schedule

Breaches and complaints:

- Community concerns about construction activities • Vehicle routing
- Unacceptable queuing or parking
- Adherence to safety & environmental standards & programmes
- Low Emissions Zone (LEZ) and Ultra Low Emissions Zone (ULEZ) compliance
- Anti-idling

Safety:

- Logistics-related incidents
- Record of associated fatalities and serious injuries
- Methods staff are travelling to site
- Vehicles and operators not meeting safety requirements
- Personal safety surrounding the site

Collision Reporting

8.4. All collisions and accidents involving the projects' vehicle and drivers will be reported to the Project Manager and relevant parties.

8.5. Within 15 days of the contract variation date, the contractor will provide the authority with a collision report. The contractor shall provide the authority with an updated collision report on a quarterly basis or within 5 days of a written request.

8.6. The data collected will be reported back to the client with full transparency to local authority.

Appendix A – CONSTRUCTION PROGRAMME GANNT CHART

New detached dwelling house no 2 Downhills Way, Tottenham, London House Type 2, N17 6AH

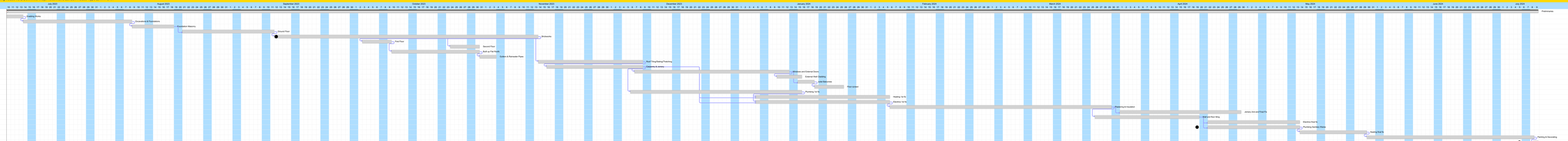

Appendix B – Local Engagement Letter

BAUHAUS

Land between Nos.145-147 Downhills Way N17 6AH

Dear Residents of Downhills way

Bauhaus will be the construction company working on Land between Nos.145-147 Downhills Way N17 6AH.

Works shall commence to set up and secure the site from 17 July 2023.

Our working hrs are 08.00 to 18.00 Monday to Friday and 08.00 to 13.00 on Saturdays.

Site manager is Pat Nathen 07810482447 e mail pat@bauhaus.co.uk

Project manager Vic Singh 07951950828 vic@bauhaue.co.uk

The project can be viewed on the planning service web site Planning Application Reference No. HGY/2021/3223.

The works will be completed Sumer 2024 if you have any question or throughout the project you have any concerns, please direct them to info@bauhaus.co.uk or call the office on 080013889160.

Regards

Vic Singh

Appendix C – CONSIDERATE CONSTRUCTION SCHEME

Vic Jagdev <vic@bauhaus.co.uk>

CCS Organisation Registration order - UK Bauhaus Ltd

1 message

registrations@ccscheme.org.uk <registrations@ccscheme.org.uk> 29 June 2023 at 09:33
To: vic@bauhaus.co.uk

Online order ID: CRO31615

Dear Vic

Thank you for applying to register your organisation with the Considerate Constructors Scheme. This email is to acknowledge that your order has been received.

You have paid by credit card for the total amount of £388.80 (inc. VAT).

A VAT invoice will follow by email within 3-5 working days.

Please let us know if you have any questions by emailing enquiries@ccscheme.org.uk or calling 0800 783 1423 for further information.

Kind regards

Considerate Constructors Scheme

The Assurance and Challenge Team
Automated email

Considerate Constructors Scheme
PO Box 75, Ware, SG12 0YX
T +44(0)1920 485959
E enquiries@ccscheme.org.uk

Raising Standards, Building Trust.
CCSCHEME.ORG.UK

Please note the opinions expressed in this email are those of the author and do not necessarily represent the policy of the Considerate Constructors Scheme. If you believe you have received this email in error please destroy it and notify **enquiries@ccscheme.org.uk** or call **0800 7831423**

CRO31615.pdf
94K

Appendix D - NRMM

NRMM BETA

This is a new website your **feedback** will help us to improve it.

Land between 145-147 Downhills Way N17

Haringey, N17 6AH, Greater London

Planning app. #: HGY/2021/3223

Start/End: 10 Jul 2023 - 14 Jul 2024

Registered: 26 Jun 2023

Edit

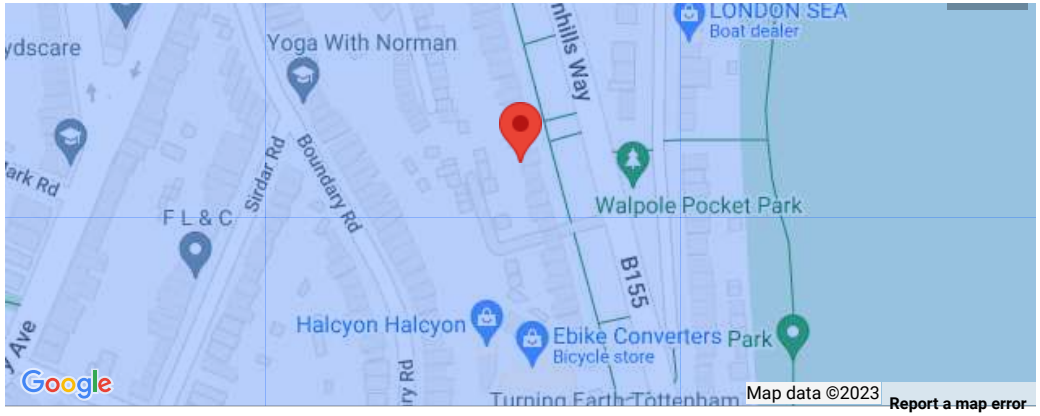

Contacts

Direct Site Contact

Vic Singh
vic@bauhaus.co.uk

Site Administrator

Vic Singh
vic@bauhaus.co.uk

Invitations

+ Invite a user

Machinery

+ Add

Download CSV

Excavator : JCB JS131 LC Compliant - OK
Dates: 10 Jul 2023 - 25 Sep 2023

Edit

Offsite

Useful links

Connect with us

We use cookies to ensure that we give you the best experience on our website. Find out more about cookies in our privacy policy.

© Copyright Greater London Authority 2023

Cobra T5000 Rotary Rig

Tight access mini compact rig

Key Features

- Restricted Access
- Low Headroom
- 3070mm Working Height

Technical Specifications

Engine: Kohler KDW 1404 18KW

Controls: Full remote

Maximum Diameter Holes: 350mm

Tracks: Rubber / Adjustable

Emission Sound Pressure: 80dB

Sound Power Level: 82 dB

Dimensions

Length: 3050mm

Width: 775-1200mm

Maximum Height: 3070mm

Basic Weight: 2100kg

Transport Height: 1700mm

01985 219192 admin@piling-equipment-ltd.com

Technical Specifications

Mast Tilt: +3 -90

Extraction Force: 1T

2 Speed Tracking : 3/5 KPM

Options

Scanreco Remote Control

Custom Paint

Mast Type: Chain

Stabilisers x 4

Accessories / Capabilities

Feed Stroke: 2050 mm

Rotary Head: Two Speed - 35/70rpm

Maximum Torque: 500/2500Nm Plus

Ground bearing Pressure: 10PSI

Applications

Restricted Access

Rotary Bored Piling

Mini Piling

Limited Access

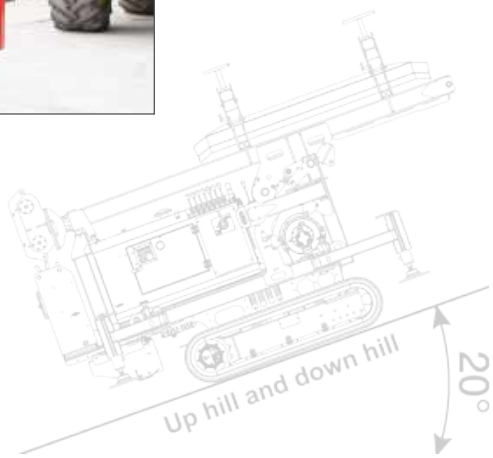

01985 219192 admin@piling-equipment-ltd.com www.piling-equipment-ltd.com

TRACKED EXCAVATOR | JS131 LC

Engine power: 74 hp (55 kW) Bucket capacity: 12.4 – 31.4 ft³ Operating weight: 30,845 – 31,499 lb

JCB

STRENGTH INSIDE AND OUT.

DESIGNED TO WITHSTAND THE RIGOURS OF ANY CONSTRUCTION SITE, THE JCB JS131 EXCAVATOR IS BUILT FROM THE HIGHEST QUALITY MATERIALS AND COMPONENTS, USING ADVANCED MANUFACTURING TECHNOLOGIES.

Finite Element Analysis, with extensive rig and endurance testing, ensures that key components last longer.

1

2

Boom and dipper.

1 The JCB JS131 features a reinforced boom and dipper made of high-strength steel, with internal baffle plates for long life durability.

2 Advanced JCB manufacturing and assembly processes produce high precision, premium-quality assembled components.

Components.

3 JCB engines are proven performers, with more than 450,000 engine units built since 2004. The JCB EcoMAX T4F engine in the JS131 has been tested for more than 110,000 hours in 70 different machines, in the toughest applications and environments in the world.

4 The JCB JZ141 features the industry's best components, including Berco running gear, Kawasaki pumps, Kayaba main control valves and a JCB EcoMAX engine.

3

4

The JCB JS131 turret is welded to both the upper and lower undercarriage frame.

Structural strength.

5 The high-strength undercarriage of a JCB JS131 uses a fully-welded X-frame construction for long-term durability.

6 A closed-box-section revolving frame increases strength, reduces stress and is highly resistant to impact damage.

7 The rigid upper frame in the JS131 provides maximum durability and support.

8 A rigid, durable door design provides added strength.

5

6

8

7

MAXIMUM PRODUCTIVITY, MINIMUM SPEND.

THE JCB JS131 DELIVERS UNPARALLELED PERFORMANCE AND UNBEATABLE PRODUCTIVITY. THE POWERFUL AND EFFICIENT JCB ECOMAX ENGINE REQUIRES NO DPF OR DEF, AND WORKS IN HARMONY WITH OTHER MACHINE COMPONENTS FOR MAXIMUM EFFICIENCY.

1

The JS131 supports a wide range of attachments for maximum versatility.

Versed in versatility.

1 The JCB quick hitch system is purpose-designed for the JS range, and makes changing attachments quicker and easier.

Hammer and auxiliary pipework options are available, to run a variety of attachments.

Optional rubber street pads allow the JS131 to operate on surfaces such as tarmac and sealed roads, without causing damage.

The JS131's relatively low operating weight allows for easy towing*, making it an excellent solution for rental and urban applications.

** Subject to local regulations.*

Upping output.

5 Simultaneous tracking and excavating is smooth and fast. Proportional controls allow precise command of attachments.

6 The JCB JS131 provides a solid, stable work platform for fast cycle times.

7 With an impressive 20,660 lbf bucket tearout, the JS131 is extremely productive in all applications.

8 JCB's innovative hydraulic regeneration system recycles oil across the cylinders for faster cycle times and reduced fuel consumption.

The efficient excavator.

9 The JCB EcoMAX T4F 74 hp (55 kW) engine produces peak torque at just 1,200 RPM, for improved fuel-efficient matching to the hydraulic system, resulting in fuel savings of up to 10 percent.

10 The JS131 features an engine-driven cooling fan with a proportional control system, to maintain optimum fan speed.

11 Variable power bands allow performance – and fuel efficiency – to be matched to specific tasks.

The JS131 reduces fuel consumption through advanced hydraulic technology, including optimized hydraulic pump settings, advanced spool design, and advanced electronic management software. Additionally, JCB AutoIDLE technology automatically reduces engine speed when hydraulics are not in use.

Cushioned boom and dipper ends prevent shock loadings, thereby reducing stress on the machine and increasing operator comfort.

A COMFORTABLE FAVORITE.

JCB EXCAVATORS ARE DESIGNED AROUND THE OPERATOR AND FEATURE INTUITIVE CONTROLS AND A COMFORTABLE, DISTRACTION-FREE WORK ENVIRONMENT.

A large, laminated glass window in the roof enables excellent visibility when working at height.

Intuitive controls improve comfort and productivity. The JS131's joystick-mounted power boost button delivers extra hydraulic power when its needed.

A balanced slew and electronic/ hydraulic-controlled slew braking are responsive and precise.

Visibly better.

1 A 70/30 front windshield provides excellent front visibility and a clear view of the front right track, for safer digging and maneuvering.

2 An innovative, low-level hood provides excellent rearward visibility.

Comfortably in control.

3 The color, 7-inch, multi-function display is easy to read in all light conditions. The home screen can be customized and operational information is provided in real time.

5

6

The working environment.

4 The JS131 creates a quieter working environment inside and out. Noise levels are reduced to 70 dB (A) inside and 98dB (A) outside.

JCB cabs use six viscous rubber mounts to minimize noise and vibration.

A positive-pressure environment keeps out dirt and dust.

5 JCB's climate control option offers a precisely controlled cab temperature with fresh or recirculated air. Demisting/defrosting functions keep the front windshield clear.

6 The cab features a spacious luggage tray behind the operator's seat.

7 A large floor area with large, high-grip pedals enables easy and precise tracking.

7

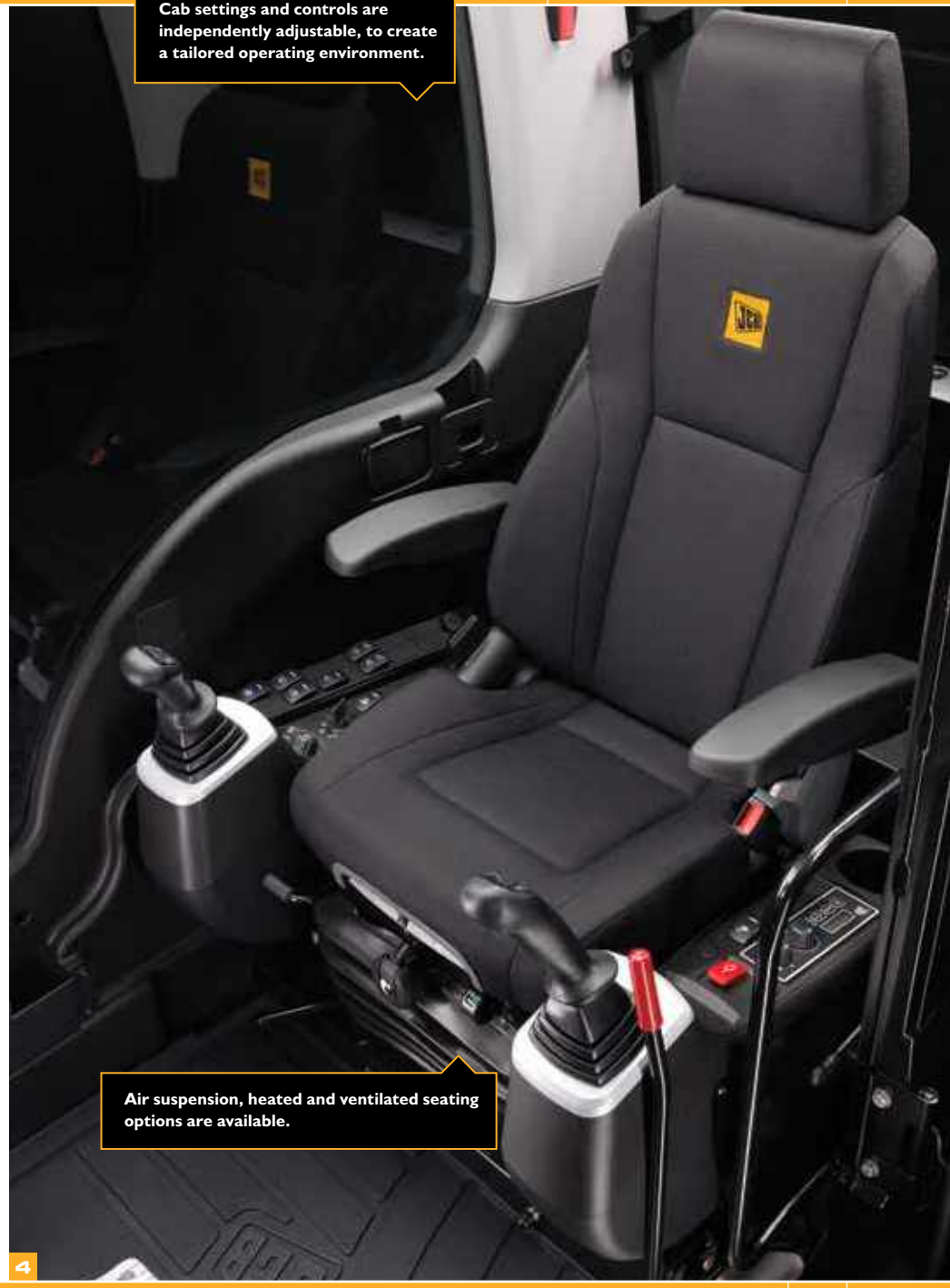

Cab settings and controls are independently adjustable, to create a tailored operating environment.

Air suspension, heated and ventilated seating options are available.

4

LESS SERVICING, MORE SERVICE.

THE JCB JS131 IS DESIGNED FOR REDUCED MAINTENANCE AND EASY SERVICING, ALLOWING MORE UPTIME AND GREATER PRODUCTIVITY.

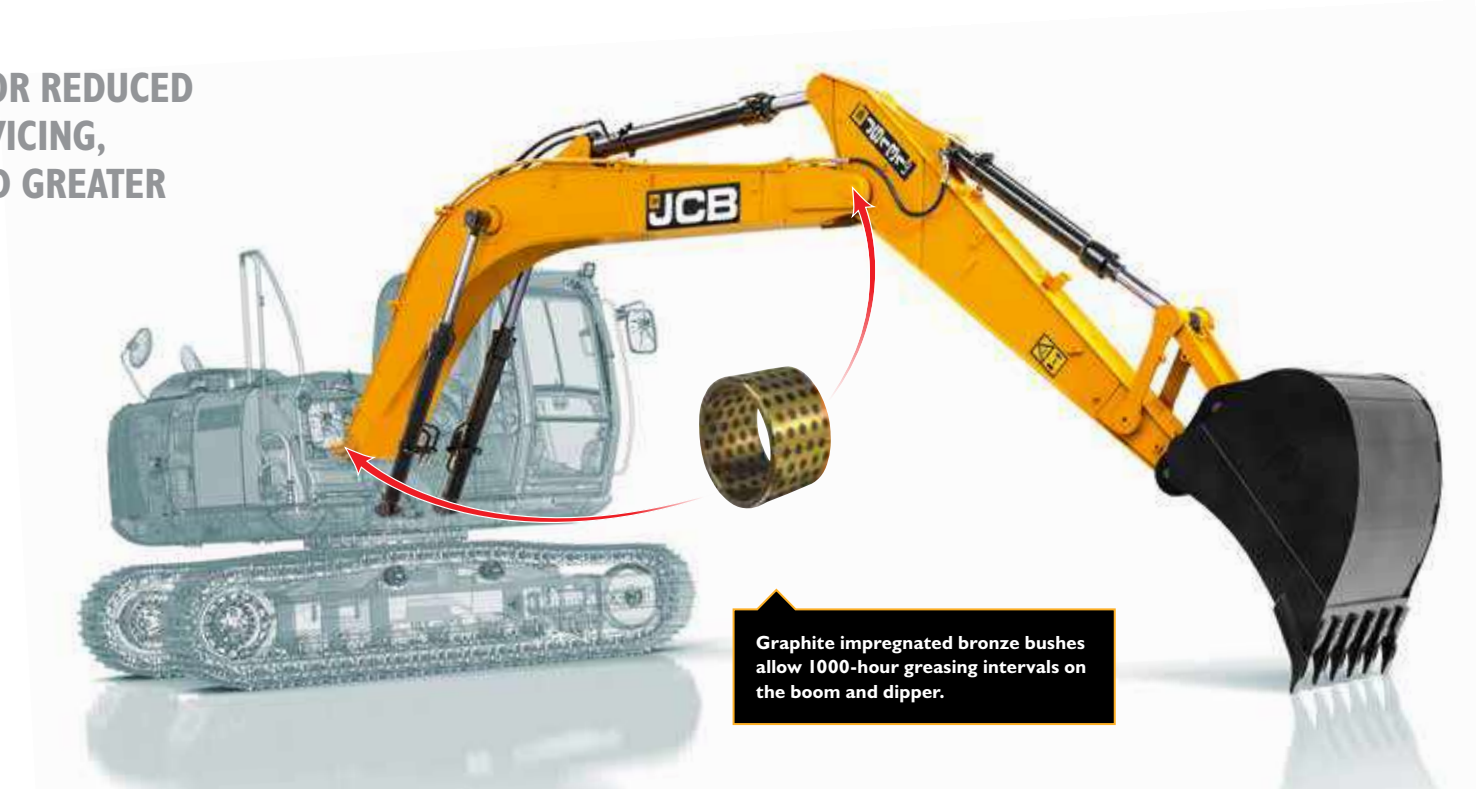

Graphite impregnated bronze bushes allow 1000-hour greasing intervals on the boom and dipper.

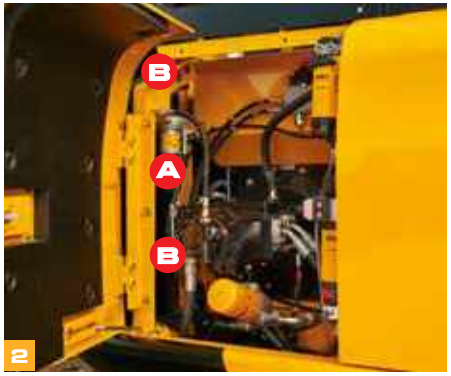

(A) Hydraulics oil filters (B) Fuel filters

Easy does it.

1 The air filter on a JS131 is easily accessible, and a double-element construction simplifies cleaning.

2 Filters for engine oil, hydraulic oil and fuel are centrally located for fast servicing.

3 The engine radiator, hydraulic cooler and intercooler are mounted side-by-side, so each can be serviced individually and cleaned easily.

	SERVICE INTERVALS
Engine oil and oil filter	Every 500 hours
Hydraulic oil	Every 5000 hours
Hydraulic oil filter	Every 1000 hours

4

Engine covers open and close easily with gas-assisted cylinders,allowing easy access to the large service areas.

Saving you time and money.

4 The JCB EcoMAX 74 hp (55 kW) engine in the JS131 requires no diesel particulate filter (DPF) or diesel engine fluid (DEF) and no additional engine aftertreatment.

5 An available scavenger filtration system uses suction from the cooling fan to remove heavier particles from the induction system, eliminating the need for a visibowl-style pre-cleaner.

6 The recalibration option allows the JCB EcoMAX engine to run on lower grade fuels, allowing the JS131 to be resold across territories, for increased residual values.

7 Engine oil levels, coolant, and system errors are automatically checked on start-up, and the results are displayed on the in-cab monitor.t

5

6

7

THE SAFE CHOICE.

THE JCB JS131 IS DESIGNED FOR THE ENHANCED SAFETY OF THE OPERATOR AND OTHERS ON THE JOB SITE.

A bulkhead heat shield, between the pumps and the engine, guards against heat and noise.

1 The JS131 hood opens front-to-rear for easy and safe engine access.

2 For extra peace of mind, JCB cabs are available with an integral Rollover Protection Structure (ROPS). Additionally, JCB's Falling Object Guard Structure (FOGS) uses standard mounting brackets.

3 JCB JS131s feature large glass areas and low hood line for superb visibility.

4 Steps and platforms are constructed from anti-slip punched steel plates for optimum grip in wet or icy conditions. Bolts are recessed bolts to reduce trip hazards.

5 Optional rear and side view cameras display uninterrupted rear and side views via the smart controller display.

6 Side and rear view mirrors enhance all-around visibility and safety compliance.

7 JCB's Safety Level Lock fully isolates hydraulic functions to avoid unintended movements. The JCB 2GO system requires two, separate inputs from the operator, preventing the machine from being started when it is not in a safe, locked position.

8 There's no need to climb onto the JS131 to complete your daily checks; all routine checkpoints can be done from ground level.

9 Optional safety rails protect operators from falls from the upper structure.

10 Optional beacons enhance on-site safety.

11 Optional LED work lights improve visibility in low-light conditions.

7

8

9

11

LIVELINK, WORK SMARTER.

LiveLink tracks the efficiency of your machines to maximize ROI.

- Manage your fleet from anywhere
- Reduce operating costs
- Improve productivity
- Monitor fuel and consumption*
- Receive reports by day / week / month

**For machines with electronic engine management system only*

LiveLink sends service alerts and diagnostic warnings for effective maintenance planning.

- Machine health alerts
- Machine service alerts
- Accurate hours recorded
- Detailed machine history

LiveLink reports the exact location, movement and activity of your machine for improved security.

- Pinpoint machine location
- 24/7 update on your phone/tablet
- Real-time curfew alerts
- Real-time geofence alerts
- Back-up battery
- Tow-away alert

Machine Servicing Agreement

JCB LiveLink

Enhanced Dealer Support

Superior Build Quality

Note: Please consult your local dealer for LiveLink availability.

VALUE ADDED.

WHATEVER YOU NEED AND WHEREVER YOU ARE, THE DEPENDABLE JCB DEALER NETWORK IS HERE TO MAKE SURE YOUR MACHINERY PERFORMS TO ITS FULL POTENTIAL.

1

2

3

1 JCB Technical Support Service provides instant access to factory expertise, day or night. JCB's Finance and Insurance teams are always on hand to provide fast, flexible, competitive quotes.

2 The global network of JCB Parts Centers is a model of efficiency. With 16 regional bases, we can deliver around 95 percent of all parts anywhere in the world within 24 hours. Our genuine JCB parts are designed to work in perfect harmony with your machine for optimum performance and productivity.

3 JCB Yellow Shield offers comprehensive extended warranties and service agreements, as well as service-only or repair and maintenance contracts. JCB maintenance teams offer competitive labor rates and no obligation quotes.

JCB LiveLink and JCB Yellow Shield may not be available in your region, so please check with your local dealer.

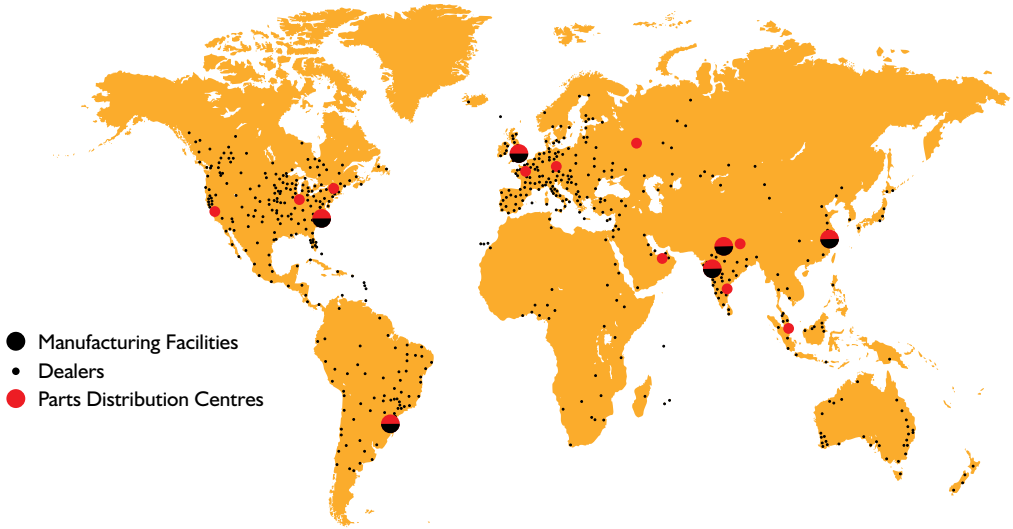

STATIC DIMENSIONS

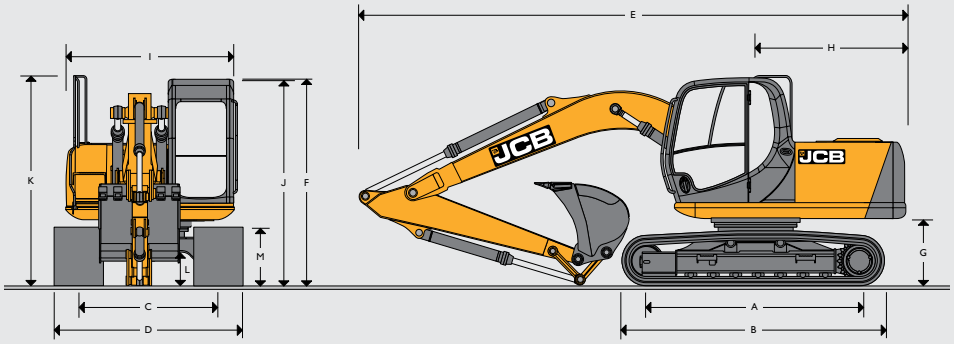

STATIC DIMENSIONS

A	Track length on ground	ft-in (mm)	9-5 (2,865)			
B	Undercarriage overall length	ft-in (mm)	11-10 (3,605)			
C	Track gauge	ft-in (mm)	6-6 (1,990)			
D	Width over tracks (20 inch trackshoes)	ft-in (mm)	8-2 (2,490)			
D	Width over tracks (24 inch trackshoes)	ft-in (mm)	8-6 (2,590)			
D	Width over tracks (28 inch trackshoes)	ft-in (mm)	8-10 (2,690)			
D	Width over tracks (33 inch trackshoes)	ft-in (mm)	9-4 (2,840)			
Arm lengths			6'11" (2.1)	8'2" (2.5)	8'10" (2.7)	9'10" (3.0)
E	Transport length	ft-in (mm)	24-8 (7,515)	24-6 (7,478)	24-4 (7,420)	23-11 (7,300)
F	Transport height	ft-in (mm)	9-5 (2,867)	9-5 (2,867)	10-6 (3,209)	10-9 (3,289)
G	Counterweight clearance	ft-in (mm)	3-0 (905)			
H	Tail swing radius	ft-in (mm)	7-0 (2,135)			
I	Width of superstructure	ft-in (mm)	7-11 (2,410)			
J	Height over cab	ft-in (mm)	9-4 (2,845)			
K	Height over grab rail	ft-in (mm)	9-5 (2,867)			
L	Ground clearance	ft-in (mm)	1-5 (425)			
M	Track height	ft-in (mm)	2-8 (811)			

ENGINE

Model	JCB EcoMAX 444 TCA 55 EU Stage IIIB, EPA Tier 4 Final compliant.
Type	Water cooled, 4-stroke, 4-cylinder in-line, common rail injection, turbocharged fixed geometry intercooled diesel.
Rated power (ISO 14396)	74 hp (55 kW) @ 1800 RPM
Piston displacement	4.4 liters
Air filtration	Dry.
Starting system	24 V
Batteries	2 x 12 V
Alternator	24 V, 55 amp

SLEW SYSTEM

Slew motor	Axial piston type
Slew brake	Hydraulic braking plus automatic spring applied disc type parking brake.
Slew torque	8,138 lbf (36.2 kNm)
Slew speed	13.3 RPM
Slew gear	Large diameter, internally toothed fully sealed grease bath lubricated.

UNDERCARRIAGE

Recovery point	Front and rear.	
Upper & lower rollers	Heat treated, sealed and lubricated.	
Track adjustment	Grease cylinder type.	
Track type	Sealed and lubricated.	
Track idler	Sealed and lubricated, with spring cusioned recoil.	
Track shoes	20-inch (500 mm) triple grouser	20-inch (500 mm) GEOGRIP
	24-inch (600mm) triple grouser	20-inch (500 mm) Rubber shoes
	28-inch (700 mm) triple grouser	24-inch (600 mm) Rubber shoes
	33-inch (850 mm) triple grouser	
Rollers and Shoes (each side)		
Upper rollers	2	
Lower rollers	7	
Track shoes	44	

TRACK DRIVE

Type	Fully hydrostatic, two speed with autoshift between high and low speed.
Travel motors	Variable swash axial piston type, fully guarded within undercarriage frame.
Final drive	Planetary reduction, bolt-on sprockets.
Servcie brake	Hydraulic counter balance valve.
Park brake	Disc type, spring applied, automatic hydraulic release.
Gradeability	70% (35 deg.) continuous.
Travel speed	High – 4.1 mp/h (6.6 km/h)
	Low – 2.4 mp/h (3.8 km/h)
Tractive effort	22,908 lbf (101.9 kNm)

HYDRAULIC SYSTEM

Pumps	
Main pumps	2 variable displacement axial piston type.
Maximum flow	2 x 34.3 gal/min (130 l/min)
Servo pump	Gear type.
Maximum flow	5.3 gal/min (20 L/min)
Control valve	
A combined four and five spool control valve with auxiliary service spool as standard	
Relief valve settings	
Boom/Arm/Bucket	4,554 psi (314 bar)
With power boost	4,975 psi (343 bar)
Swing circuit	4,047 psi (279 bar)
Travel circuit	4,975 psi (343 bar)
Pilot control	580 psi (40 bar)
Filtration	
In tank	150 micron, suction strainer.
Main return line	10 micron, glass fibre element.
Pilot line	10 micron, paper element.
Hydraulic hammer return	10 micron, reinforced microform element.

SERVICE CAPACITIES

	Gallons (Litres)
Fuel tank	58 (220)
Engine coolant	5.2 (19.7)
Engine oil	3.7 (14)
Swing reduction gear	0.6 (2.2)
Track reduction gear (each side)	0.9 (3.5)
Hydraulic system	33.3 (126)
Hydraulic tank	19.3 (73)

WEIGHTS AND GROUND BEARING PRESSURES

Shoe Width	Operating Weight	Bearing Pressure
Machine equipped with 15'5" (4.7 m) Monoboom, 8'2" (2.5 m) Dipper, 944 lb (417 kg) Excavating Bucket, operator and full fuel tank.		
20 inch	30,117 lb (13,661 kg)	6.26 lb/in² (0.44 kg/sq.com)
24 inch	30,353 lb (13,768 kg)	5.26 lb/in² (0.37 kg/sq.com)
28 inch	30,591 lb (13,876 kg)	4.55 lb/in² (0.32 kg/sq.com)
33 inch	30,948 lb (14,038 kg)	3.84 lb/in² (0.27 kg/sq.com)

BUCKET AND ARM COMBINATION

Bucket options		GP Bucket						Grade Bucket		
Bucket width	in (mm)	24 (600)	28 (700)	31 (800)	39 (1,000)	47 (1,200)	51 (1,300)	60 (1,524)	72 (1,836)	72 (1,836)
Bucket capacity	ft³ (m³)	12.4 (.35)	14.8 (.42)	17.7 (.50)	23.3 (.66)	28.6 (.81)	31.4 (.89)	23.0 (.65)	27.9 (.79)	27.9 (.79)
Bucket weight	lb (kg)	631 (286)	688 (312)	739 (335)	844 (383)	944 (428)	1,001 (454)	996 (452)	1,129 (512)	1,281 (581)
6'11" quick hitch (No quick hitch)		❑ (❑)	❑ (❑)	❑ (❑)	■ (❑)	● (■)	● (■)	■ (❑)	● (■)	● (■)
8'2" quick hitch (No quick hitch)		❑ (❑)	❑ (❑)	❑ (❑)	■ (❑)	● (■)	● (●)	■ (■)	● (●)	● (●)
8'10" quick hitch (No quick hitch)		❑ (❑)	❑ (❑)	❑ (❑)	■ (■)	● (●)	X (●)	● (■)	● (●)	X (●)
9'10" quick hitch (No quick hitch)		❑ (❑)	❑ (❑)	❑ (❑)	● (■)	X (●)	X (●)	● (■)	X (●)	X (●)

❑ = Material weight up to 112.4 lb/ft³ (1,800 kg/m³).
● = Material weight up to 93.6 lb/ft³. (1,500 kg/m³).
■ = Material weight up to 74.9 lb/ft³. (1,200 kg/m³).
These recommendations are given as a guide based on typical operating conditions.
Please contact your distributor for the correct selection of buckets and attachments to suit the application.

WORKING RANGE

	Dipper length:		6'11" (2.1 m)	8'2" (2.5 m)	8'10" (2.7 m)	9'10" (3.0 m)
A	Maximum digging reach	ft-in (mm)	24-8 (7,517)	27-4 (8,340)	28-0 (8,522)	28-10 (8,796)
B	Maximum digging reach (on ground)	ft-in (mm)	24-2 (7,356)	26-11 (8,197)	27-6 (8,380)	28-5 (8,660)
C	Maximum digging depth	ft-in (mm)	15-9 (4,809)	18-2 (5,530)	17-10 (5,425)	19-9 (6,028)
D	Maximum digging height	ft-in (mm)	27-6 (8,375)	29-11 (9,118)	30-4 (9,242)	31-0 (9,440)
E	Maximum dumping height	ft-in (mm)	20-1 (6,115)	22-1 (6,729)	22-6 (6,855)	23-1 (7,041)
F	Maximum vertical wall cut depth	ft-in (mm)	10-7 (3,219)	11-11 (3,625)	12-2 (3,712)	13-3 (4,050)
G	Minimum swing radius	ft-in (mm)	7-8 (2,337)	7-4 (2,231)	8-3 (2,505)	8-6 (2,591)
	Bucket rotation	deg	182°	182°	182°	182°
	Maximum dipper tearout	lbf (kNm)	16,299 (72.5)	14,523 (64.6)	14,208 (63.2)	13,196 (58.7)
	Maximum bucket tearout	lbf (kNm)	20,660 (91.9)	20,660 (91.9)	20,660 (91.9)	20,660 (91.9)

WORKING RANGE

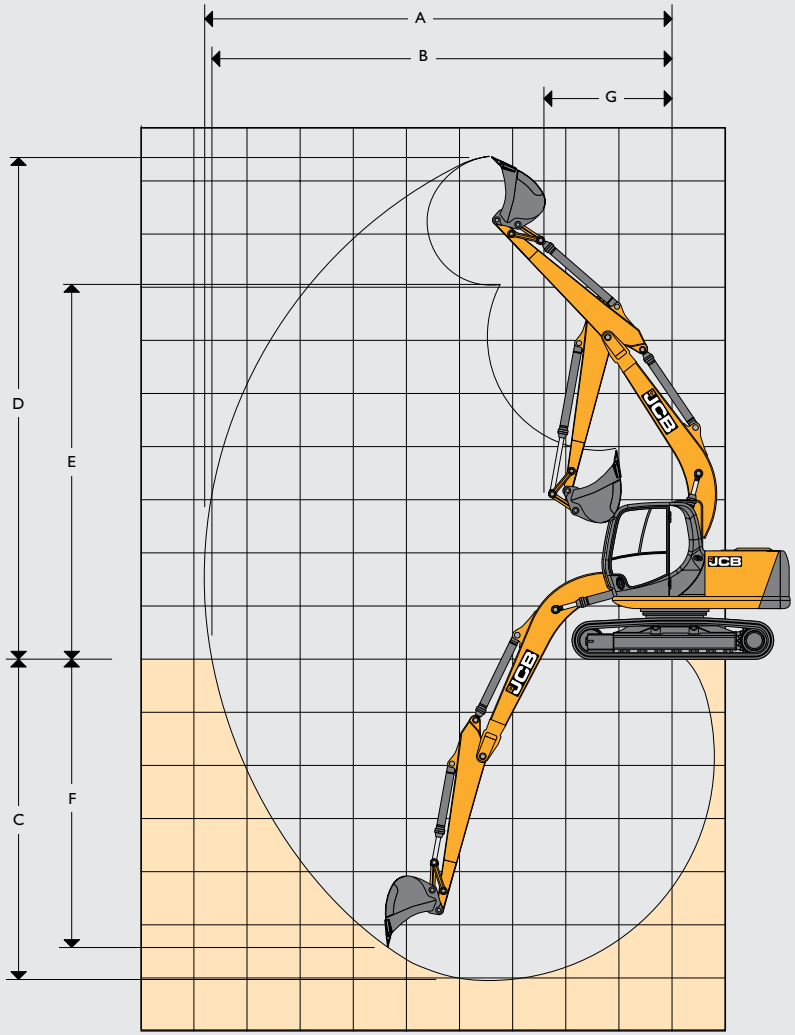

LIFT CAPACITIES – DIPPER LENGTH: 6'11" (2.1 M), 15'5" (4.70 M) MONOBOOM, TRACKSHOES: 20-INCH (500 MM), NO BUCKET — JS131 LC

Reach	9'10" (3 m)		13'1" (4 m)		16'5" (5 m)		19'8" (6 m)		Capacity at Max Reach		
Load Point Ht.	lb (kg)	lb (kg)	lb (kg)	lb (kg)	lb (kg)	lb (kg)	lb (kg)	lb (kg)	lb (kg)	lb (kg)	ft-in (mm)
19'8" (6 m)			7,121 (3,230)	7,121 (3,230)	7,099 (3,230)	7,099 (3,220)			6,526 (2,960)	6,526 (2,960)	16-5 (5,044)
16'5" (5 m)			7,452 (3,380)	7,452 (3,380)	7,363 (3,340)	7,143 (3,340)			6,085 (2,760)	5,600 (2,540)	19-0 (5,792)
13'1" (4 m)	9,965 (4,520)	9,965 (4,520)	8,576 (3,890)	8,576 (3,890)	7,848 (3,560)	6,989 (3,170)	7,430 (3,370)	5,269 (2,390)	5,908 (2,680)	4,850 (2,200)	20-6 (6,293)
9'10" (3 m)	13,580 (6,160)	13,580 (6,160)	10,229 (4,640)	9,436 (4,280)	8,708 (3,950)	6,790 (3,080)	7,341(3,330)	5,159 (2,340)	5,908 (2,680)	4,431 (2,010)	21-7 (6,603)
6'7" (2 m)			12,015 (5,450)	8,973 (4,070)	9,458 (4,290)	6,548 (2,970)	7,209 (3,270)	5,049 (2,290)	6,041 (2,740)	4,233 (1,920)	22-1 (6,750)
3'3" (1 m)			12,985 (5,890)	8,642 (3,920)	9,237 (4,190)	6,349 (2,880)	7,077 (3,210)	4,938 (2,240)	5,974 (2,710)	4,167 (1,890)	22-1 (6,745)
0'0" (0 m)	13,492 (6,120)	12,963 (5,880)	12,743 (5,780)	8,444 (3,830)	9,083 (4,120)	6,195 (2,810)	6,989 (3,170)	4,850 (2,200)	6,129 (2,780)	4,277 (1,940)	21-6 (6,587)
(-) 3'3" (1 m)	18,717 (8,490)	12,963 (5,880)	12,676 (5,750)	8,377 (3,800)	9,017 (4,090)	6,151 (2,790)	6,967 (3,160)	4,828 (2,190)	6,570 (2,980)	4,564 (2,070)	20-6 (6,264)
(-) 6'7" (2 m)	17,527 (7,950)	13,051 (5,920)	12,698 (5,760)	8,400 (3,810)	9,039 (4,100)	6,151 (2,790)			7,452 (3,380)	5,159 (2,340)	18-9 (5,749)
(-) 9'10" (3 m)	15,410 (6,990)	13,272 (6,020)	11,927 (5,410)	8,532 (3,870)					8,907 (4,040)	6,349 (2,880)	16-3 (4,979)

LIFT CAPACITIES – DIPPER LENGTH: 8'2" (2.50 M), 15'5" (4.70 M) MONOBOOM, TRACKSHOES: 20-INCH (500 MM), NO BUCKET. — JS131 LC

Reach	9'10" (3 m)		13'1" (4 m)		16'5" (5 m)		19'8" (6 m)		Capacity at Max Reach		
Load Point Ht.	lb (kg)	lb (kg)	lb (kg)	lb (kg)	lb (kg)	lb (kg)	lb (kg)	lb (kg)	lb (kg)	lb (kg)	ft-in (mm)
19'8" (6 m)			6,173 (2,800)	6,173 (2,800)	6,636 (3,010)	6,636 (3,010)			5,225 (2,370)	5,225 (2,370)	18-2 (5,533)
16'5" (5 m)			6,570 (2,980)	6,570 (2,980)	6,658 (3,020)	6,658 (3,020)	6,856 (3,110)	5,357 (2,430)	4,938 (2,240)	4,938 (2,240)	20-4 (6,221)
13'1" (4 m)	8,510 (3,860)	8,510 (3,860)	7,694 (3,490)	7,694 (3,490)	7,209 (3,270)	7,077 (3,210)	6,989 (3,170)	5,313 (2,410)	4,828 (2,190)	4,431 (2,010)	21-9 (6,689)
9'10" (3 m)	11,905 (5,400)	11,905 (5,400)	9,370 (4,250)	9,370 (4,250)	8,113 (3,680)	6,856 (3,110)	7,385 (3,350)	5,203 (2,360)	4,828 (2,190)	4,079 (1,850)	22-9 (6,982)
6'7" (2 m)	15,719 (7,130)	13,911 (6,310)	11,243 (5,100)	9,083 (4,120)	9,149 (4,150)	6,592 (2,990)	5,247 (2,380)	5,049 (2,290)	4,960 (2,250)	3,902 (1,770)	23-4 (7,121)
3'3" (1 m)	14,043 (6,370)	13,206 (5,990)	12,809 (5,810)	8,686 (3,940)	9,259 (4,200)	6,349 (2,880)	7,077 (3,210)	5,688 (2,580)	5,203 (2,360)	3,836 (1,740)	23-3 (7,116)
0'0" (0 m)	15,057 (6,830)	12,919 (5,860)	12,743 (5,780)	8,422 (3,820)	9,083 (4,120)	6,195 (2,810)	6,967 (3,160)	4,806 (2,180)	5,600 (2,540)	3,924 (1,780)	22-9 (6,967)
(-) 3'3" (1 m)	19,026 (8,630)	12,831 (5,820)	12,610 (5,720)	8,311 (3,770)	8,973 (4,070)	6,085 (2,760)	6,900 (3,130)	4,762 (2,160)	5,974 (2,710)	4,145 (1,880)	21-9 (6,663)
(-) 6'7" (2 m)	18,166 (8,240)	12,897 (5,850)	12,610 (5,720)	8,311 (3,770)	8,951 (4,060)	6,085 (2,760)	9,127 (4,140)	4,784 (2,170)	6,658 (3,020)	4,608 (2,090)	20-3 (6,181)
(-) 9'10" (3 m)	16,446 (7,460)	13,073 (5,930)	11,839 (5,370)	8,400 (3,810)	9,039 (4,100)	6,151 (2,790)			7,981 (3,620)	5,489 (2,490)	18-0 (5,474)

Lift capacity front and rear.

Lift capacity full circle.

Notes:
1. For lifting capacity including bucket, subtract total weight of bucket or bucket and quick hitch from above values.
2. Lifting capacities are based on ISO 10567, that is: 75% of minimum tipping load or 87% of hydraulic lift capacity, whichever is the less. Lifting capacities marked* are based on hydraulic capacity.
3. Lift capacities assume that the machine is on firm, level ground.
4. Lift capacities may be limited by local regulations. Please refer to your dealer.

LIFT CAPACITIES – DIPPER LENGTH: 8'10" (2.70 M), 15'5" (4.70 M) MONOBOOM, TRACKSHOES: 20-INCH (500 MM), NO BUCKET. **JS131 LC**

Reach	9'10" (3 m)		13'1" (4 m)		16'5" (5 m)		19'8" (6 m)		Capacity at Max Reach		
Load Point Ht.	lb (kg)	lb (kg)	lb (kg)	lb (kg)	lb (kg)	lb (kg)	lb (kg)	lb (kg)	lb (kg)	lb (kg)	ft-in (mm)
19'8" (6 m)					6,261 (2,840)	6,261 (2,840)	0	0	5,578 (2,530)	5,578 (2,530)	18-5 (5,653)
16'5" (5 m)			5,997 (2,720)	5,997 (2,720)	5,997 (2,720)	6,217 (2,820)	6,504 (2,950)	5,379 (2,440)	5,269 (2,390)	4,938 (2,240)	20-8 (6,326)
13'1" (4 m)			6,944 (3,150)	6,944 (3,150)	6,702 (3,040)	6,702 (3,040)	6,614 (3,000)	5,247 (2,380)	5,137 (2,330)	4,321 (1,960)	22-3 (6,785)
9'10" (3 m)	10,273 (4,660)	10,273 (4,660)	8,444 (3,830)	8,444 (3,830)	7,518 (3,410)	6,548 (2,970)	7,033 (3,190)	5,049 (2,290)	5,115 (2,320)	3,968 (1,800)	23-2 (7,075)
6'7" (2 m)	13,823 (6,270)	12,522 (5,680)	10,185 (4,620)	8,422 (3,820)	8,488 (3,850)	6,239 (2,830)	6,944 (3,150)	4,872 (2,210)	5,247 (2,380)	3,770 (1,710)	23-7 (7,210)
3'3" (1 m)	16,579 (7,520)	11,993 (5,440)	11,751 (5,330)	8,025 (3,640)	8,686 (3,940)	5,974 (2,710)	6,768 (3,070)	4,696 (2,130)	5,291 (2,400)	3,682 (1,670)	23-6 (7,205)
0'0" (0 m)	17,835 (8,090)	11,773 (5,340)	11,662 (5,290)	7,760 (3,520)	8,466 (3,840)	5,798 (2,630)	6,614 (3,000)	4,564 (2,070)	5,357 (2,430)	3,726 (1,690)	23-2 (7,060)
(-) 3'3" (1 m)	17,923 (8,130)	11,662 (5,290)	11,530 (5,230)	7,650 (3,470)	8,355 (3,790)	5,688 (2,580)	6,548 (2,970)	4,497 (2,040)	5,644 (2,560)	3,902 (1,770)	22-2 (6,759)
(-) 6'7" (2 m)	17,196 (7,800)	11,618 (5,270)	11,486 (5,210)	7,606 (3,450)	8,311(3,770)	5,644 (2,560)	6,548 (2,970)	4,497 (2,040)	6,195 (2,810)	4,277 (1,940)	20-6 (6,287)
(-) 9'10" (3 m)	15,675 (7,110)	11,640 (5,280)	11,552 (5,240)	7,672 (3,480)	8,400 (3,810)	5,710 (2,590)			7,275 (3,300)	5,004 (2,270)	18-3 (5,592)

LIFT CAPACITIES – DIPPER LENGTH: 9'10" (3.00 M), 15'5" (4.7 M) MONOBOOM, TRACKSHOES: 20-INCH (500 MM), NO BUCKET. **JS131 LC**

Reach	9'10" (3 m)		13'1" (4 m)		16'5" (5 m)		19'8" (6 m)		Capacity at Max Reach		
Load Point Ht.	lb (kg)	lb (kg)	lb (kg)	lb (kg)	lb (kg)	lb (kg)	lb (kg)	lb (kg)	lb (kg)	lb (kg)	ft-in (mm)
19'8" (6 m)					5,600 (2,540)	5,600 (2,540)	5,556 (2,520)	5,556 (2,460)	4,806 (2,180)	4,806 (2,180)	20-1 (6,113)
16'5" (5 m)					5,754 (2,610)	5,754 (2,610)	5,997 (2,720)	5,997 (2,470)	4,564 (2,070)	4,431 (2,010)	22-1 (6,741)
13'1" (4 m)			6,526 (2,960)	6,526 (2,960)	6,371 (2,890)	6,371 (2,890)	6,261 (2,840)	6,261 (2,430)	4,475 (2,030)	3,946 (1,790)	23-5 (7,175)
9'10" (3 m)	9,833 (4,460)	9,833 (4,460)	8,179 (3,710)	8,179 (3,710)	7,297 (3,310)	6,922 (3,140)	6,790 (3,080)	6,790 (2,370)	4,497 (2,040)	3,660 (1,660)	24-4 (7,448)
6'7" (2 m)	13,691 (6,210)	13,691 (6,210)	10,141 (4,600)	9,215 (4,180)	8,422 (3,820)	6,636 (3,010)	7,231 (3,280)	7,231 (2,290)	4,608 (2,090)	3,505 (1,590)	24-9 (7,578)
3'3" (1 m)	16,843 (7,640)	13,360 (6,060)	11,927 (5,410)	8,730 (3,960)	9,281 (4,210)	6,349 (2,880)	7,055 (3,200)	7,055 (2,220)	4,828 (2,190)	3,461 (1,570)	24-8 (7,574)
0'0" (0 m)	16,557 (7,510)	12,853 (5,830)	12,721 (5,770)	8,400 (3,810)	9,039 (4,100)	6,129 (2,780)	6,922 (3,140)	6,922 (2,160)	5,071 (2,300)	3,505 (1,590)	24-4 (7,434)
(-) 3'3" (1 m)	18,982 (8,610)	12,654 (5,740)	12,500 (5,670)	8,201 (3,720)	8,885 (4,030)	5,997 (2,720)	6,812 (3,090)	6,812 (2,120)	5,335 (2,420)	3,682 (1,670)	23-5 (7,150)
(-) 6'7" (2 m)	18,585 (8,430)	12,632 (5,730)	12,434 (5,640)	8,135 (3,690)	8,818 (4,000)	5,952 (2,700)	6,790 (3,080)	6,790 (2,100)	5,842 (2,650)	4,012 (1,820)	22-0 (6,704)
(-) 9'10" (3 m)	17,372 (7,880)	12,743 (5,780)	12,478 (5,660)	8,179 (3,710)	8,862 (4,020)	5,974 (2,710)	6,856 (3,110)	6,856 (2,130)	6,768 (3,070)	4,652 (2,110)	19-9 (6,060)

Lift capacity front and rear.

Lift capacity full circle.

Notes:

1. **For lifting capacity including bucket, subtract total weight of bucket or bucket and quick hitch from above values.**
2. Lifting capacities are based on ISO 10567, that is: 75% of minimum tipping load or 87% of hydraulic lift capacity, whichever is the less. Lifting capacities marked* are based on hydraulic capacity.
3. Lift capacities assume that the machine is on firm, level ground.
4. Lift capacities may be limited by local regulations. Please refer to your dealer.

JCB
JCB
JS131
JS131

ONE COMPANY, MORE THAN 300 MACHINES.

Your nearest JCB Dealer

9999/5968 en-US 08/16 Issue 1 (T4F) - DWUSA 4678

Tracked Excavator JS131 LC

Engine power: 74 hp (55 kW) Bucket capacity: 12.4 – 31.4 ft^3 Operating weight: 30,845 – 31,499 lb

JCB North American

2000 Bamford Blvd., Pooler, Georgia, 31322 Tel: (912) 447-2000

Download the very latest information on this product range at www.jcb.com

JCB inc. All rights reserved. No part of this publication may be reproduced, stored in a retrieval system, or transmitted in any form or by any other means, electronic, mechanical, photocopying or otherwise, without prior permission from JCB inc. All references in this publication to operating weights, sizes, capacities and other performance measurements are provided for guidance only and may vary dependant upon the exact specification of machine. They should not therefore be relied upon in relation to suitability for a particular application. Guidance and advice should always be sought from your JCB Dealer. JCB reserves the right to change specifications without notice. Illustrations and specifications shown may include optional equipment and accessories. The JCB logo is a registered trademark of J C Bamford Excavators Ltd.

/JCBNA /JCBNA /JCBNORTHAMERICA

JCB

STATIC DIMENSIONS AND CAPACITIES

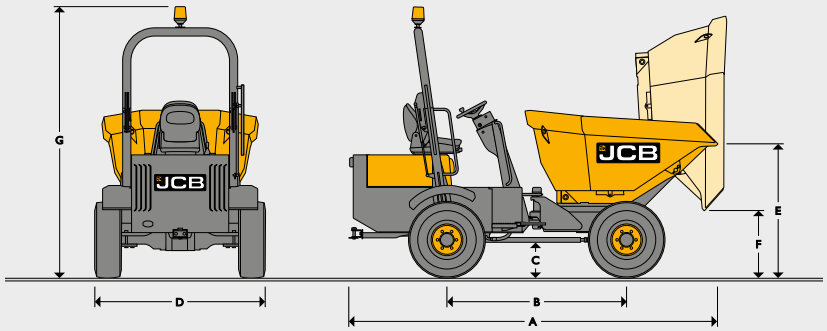

			1THT	2TFT	2TST	2THS	3TFT	3TST	3TFT	3TST	3.5TST	6TFT	6TST	9TFT	10TFT
A	Overall length	mm	2980	3570	3550		3725	3952	3725	3952		4405	4539	4484	4530
B	Wheel base	mm	1440	1900	1900	1900	1939	1939	1939	1939	1939	2450	2450	2450	2450
C	Minimum ground clearance	mm	241	184				279				385		410	
D	Width over tyres	mm	998*/1120	1492				1957	1846	1957	1846	2300	2207	2500	2550
E	Height to front lip of skip (untipped)	mm	1167	1323	1360	1522	1371	1467	1371	1467	1467	1672	1732	1722	1760
F	Height to front lip of skip (tipped)	mm	1620 (raised)	916	983	1142 (lowered) / 1640 (raised)	208	762	208	762	762	504	1258	430	440
	Turning radius to outside of skip	mm	2295	3680	3680	3680	4711	4553	4711	4553	4553	5863	5726	5994	6011
	Steering angle		+/– 45°	+/– 30.6°			+/– 30°		+/– 30°			+/– 30°			
	Oscillation		+/– 14°	+/– 10.5°			+/– 10.5°		+/– 10.5°			+/– 10°			
G	Height to top of ROPS (raised with beacon)	kg	2832	2920			2920					3178	3178	3635	3635

CAPACITIES

		1THT	2TFT	2TST	2THS	3TFT	3TST	3TFT	3TST	3.5TST	6TFT	6TST	9TFT	10TFT
Payload	kg	1000	2000	2000	2000	3000	3000	3000	3000	3500	6000	6000	9000	10000
Unladen weight	kg	1310	1964	2082	2166	2280	2330	2290	2340	2340	4115	4265	4770	4815
Tipping type		Front Tip - High Tip	Front Tip	Swivel Tip	Swivel Tip - High Tip	Front Tip	Swivel Tip	Front Tip	Swivel Tip	Swivel Tip	Front Tip	Swivel Tip	Front Tip	Front Tip
Skip capacity (water)	litres	320	750	750	750	1250	1000	1250	1000	1000	1950	1850	2064	2446
Skip capacity (struck)	litres	450	1000	1000	1000	1600	1520	1600	1520	1520	2750	2740	3899	4128
Skip capacity (heaped)	litres	540	1200	1200	1200	1950	1880	1950	1880	1880	3780	3530	4587	5046

*When fitted with narrow tyres

ENGINE

Type		1THT	2TFT	2TST	2THS	3TFT	3TST	3TFT	3TST	3.5TST	6TFT	6TST	9TFT	10TFT
Engine model		Kubota D905	Kubota D1703M			Kubota V2203M					JCB EcoMAX		Deutz TCD 3.6L4	
Capacity	ltr	0.898	1647			2197					4400		3621	
Aspiration		Naturally Aspirated	Naturally Aspirated			Naturally Aspirated					Turbocharged		Turbocharged	
Cylinders		3	3			4					4		4	
Max gross power to SAE J1995/ISO 14396	kW (hp)	15.5 (20.8)	24.5 (32.6)			32.4 (43.5)					55 (74)		90 (121)	
Max torque	Nm	56	105			147					400		480	
Emissions		EU Stage 3A	EU Stage 3A			EU Stage 3A					EU Stage IV/Tier4 Final		EU Stage 3B/Tier 4 Interim	

TRANSMISSION

	1THT	2TFT	2TST	2THS	3TFT	3TST	3TFT	3TST	3.5TST	6TFT	6TST	9TFT	10TFT
Type	Hyrdostatic Pump to hydraulic wheel motors	Hydrostatic Motor via Transfer Box to Front and Rear Axles			Manual Gearbox via Transfer Box to Front and Rear Axles		Hydrostatic Motor via Transfer Box to Front and Rear Axles			Hydrostatic Motor via Transfer Box to Front and Rear Axles			
Tyre Size	255 / 75 x 15.2 x 8 ply (option 7.0 x 12 narrow tyre)	10.0 / 75 x 15.3 (10 ply)			11.5 / 80 x 15.3 (14 ply)		11.5 / 80 x 15.3 (14 ply)			405–70–20 14PR		500–60–22.5 16PR	
Drive	Hydrostatic 1/1	2 / 2 (High and Low Range – Forward and Reverse) Hydrostatic – Permanent 4WD			Manual – 3 Forward / 1 Reverse		2 / 2 (High and Low Range – Forward and Reverse) Hydrostatic – Permanent 4WD			4 / 4 Forward and Reverse – Permanent 4WD			
Max travel speed mph (kph)	7 (11)	10 (16)			11.8 (19)		11.8 (19)			16.3 (26.2)		18.2 (29.3)	
Gradeability (maximum slope gradient)	20% (1 in 5)	19.5% (1 in 5)			25% (1 in 4)							20% (1 in 5)	

ELECTRICAL SYSTEM

		1THT	2TFT	2TST	2THS	3TFT	3TST	3TFT	3TST	3.5TST	6TFT	6TST	9TFT	10TFT
System voltage	Volt	12V												
Alternator output	Amp hour	30A	55A								95A			
Battery capacity	Amp hour	74Ah									100Ah			

SERVICE FILL CAPACITIES

		1THT	2TFT	2TST	2THS	3TFT	3TST	3TFT	3TST	3.5TST	6TFT	6TST	9TFT	10TFT
Hydraulic tank	litres	25	25			37		37			65		65	
Fuel tank	litres	35	23			37		37			50		50	

HYDRAULICS

		1THT	2TFT	2TST	2THS	3TFT	3TST	3TFT	3TST	3.5TST	6TFT	6TST	9TFT	10TFT
Pump 1 max. flow	l/min	29	21			30					60			
Pump 1 max. pressure	bar	152	25			172	210	172	210		172		210	
Steering System		Orbitrol hydrostatic steering unit powering central hydraulic steering ram												

STEERING

	1THT	2TFT	2TST	2THS	3TFT	3TST	3TFT	3TST	3.5TST	6TFT	6TST	9TFT	10TFT
Working Brake	Hydrostatic dynamic braking on rear wheel motors	Multi-plate in-board oil immersed discs on front axle								Foot brake-oil immersed discs on front/rear			
Parking Brake	Hydrostatic dynamic braking on rear wheel motors	Over centre handbrake-oil immersed discs on front axle								Over centre parking brake-dry disc in gearbox			

ENVIRONMENTAL

	1THT	2TFT	2TST	2THS	3TFT	3TST	3TFT	3TST	3.5TST	6TFT	6TST	9TFT	10TFT
Noise Emission (to ISO 4871) - Sound Pressure (LpAd)	Gear	84.8db					84db			81db		84db	
Sound Power level (LWAd)	29	101db					101db			101db		103db	
Noise Compliance	Noise - Equipment Used Outdoors Directive 2000/14/EC												
Vibration – hand arm (as defined in EN474-1 all operations)	<2.5m/s²												
Vibration – whole body (as defined in ISO/TR 25398-Work Cycle)	0.529rms (0.264m/s² Uncertainty)												

STANDARD EQUIPMENT	Folding rops frame, reversing alarm, flashing beacon, hour meter, seat belt (high visibility orange), seat (adjustable fore/aft, operator weight and back angle), heavy-duty articulation lock, towing/recovery bucket (1T N/A), leg guard (optional on 1T, 6T, 9T and 10T), CESAR Datatag security (optional on 1T), wide tyres (255/75 x 15.2 8ply) (standard on 1T only), narrow tyres (7.00x12) (optional on 1T), water in fuel monitoring (on 3.5T, 6T, 9T and 10T), coolant level monitoring (on 3.5T, 6T, 9T and 10T).	**OPTIONAL EQUIPMENT**	High visibility safety decals for steps and handrails, rear view mirror, road lights (RTA) including light guards, spare wheel, special paint, fan guard (1T N/A).

HILTI

TE 3000-AVR

Bedienungsanleitung	de
Operating instructions	en
Οδηγιες χρησεως	el
Használati utasítás	hu
Instrukcja obsługi	pl
Инструкция по зксплуатации	ru
Návod k obsluze	cs
Návod na obsluhu	sk
Upute za uporabu	hr
Navodila za uporabo	sl
Ръководство за обслужване	bg
Instrucțiuni de utilizare	ro
Kulllanma Talimatı	tr
دليل الاستعمال	ar
ІНСТРУКЦІЯ З ЕКСПЛУАТАЦІЇ	uk
取扱説明書	ja
사용설명서	ko
操作說明書	zh
操作说明书	cn

CE

1

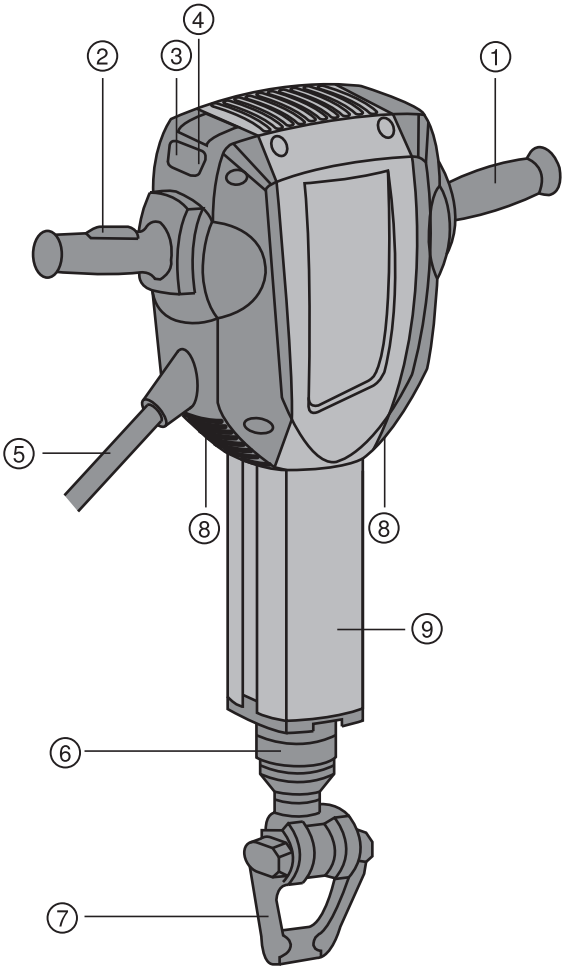

2

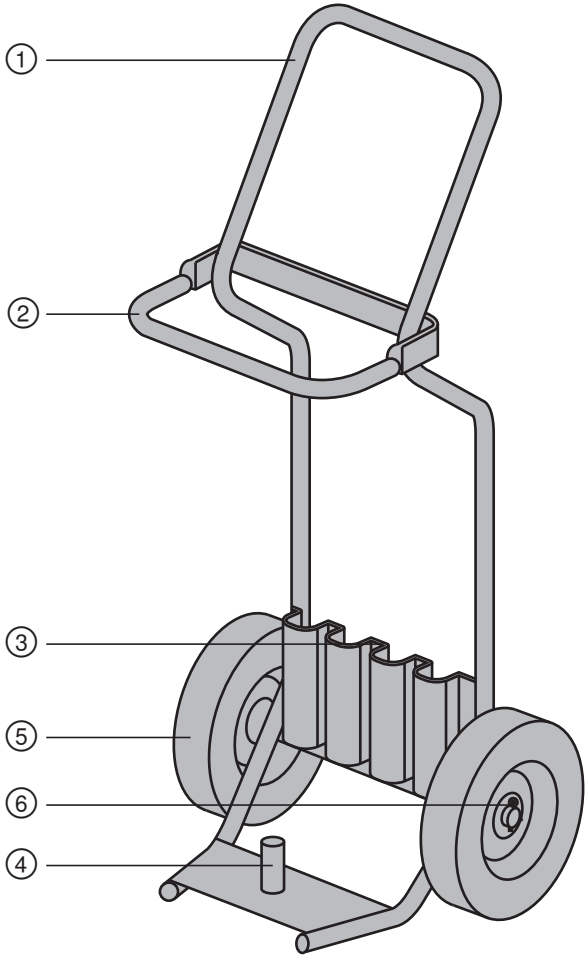

3

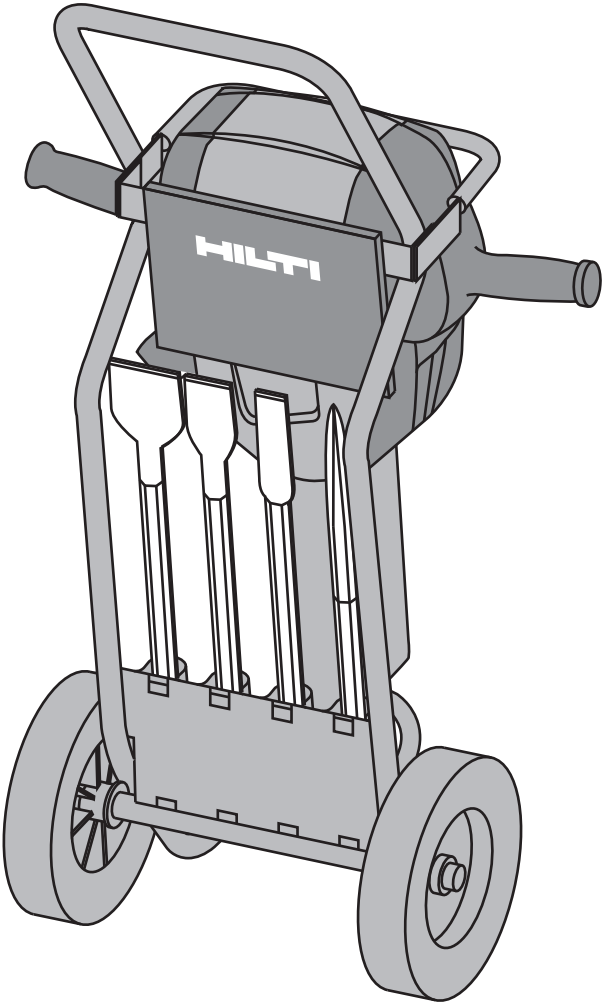

4

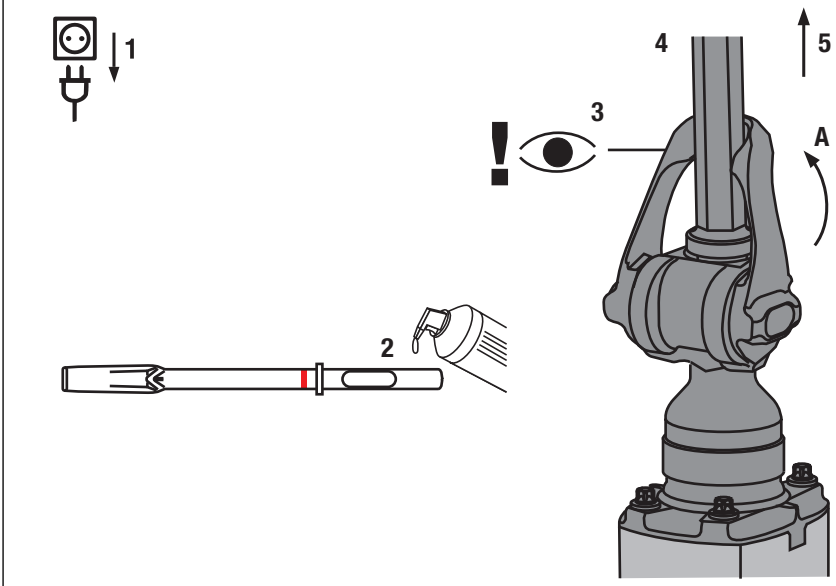

5

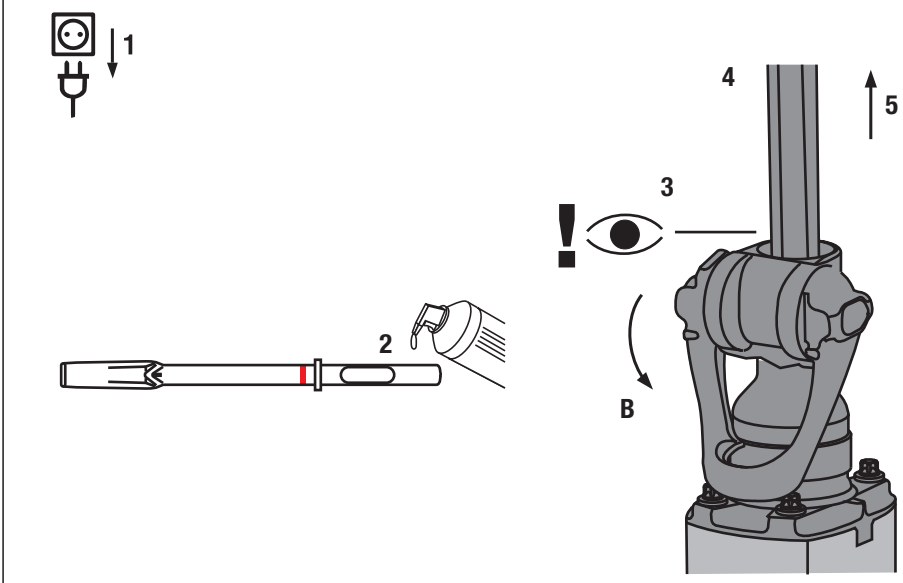

TE-H28P SM

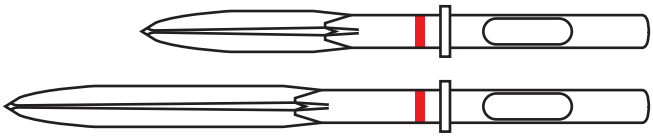

400 mm

500 mm

TE-H28P FM

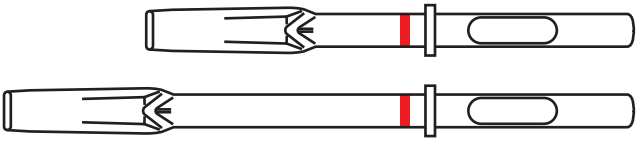

400 mm

500 mm

TE-H28P SPM

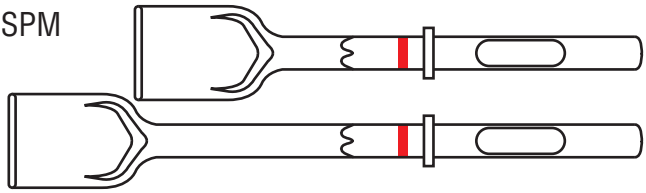

80/400 mm

80/500 mm

TE-H28P SPMA

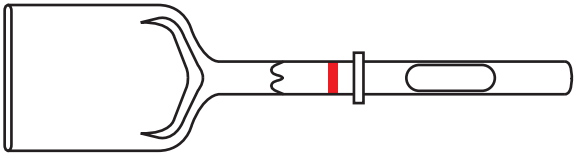

125/450 mm

TE-H28P SPI

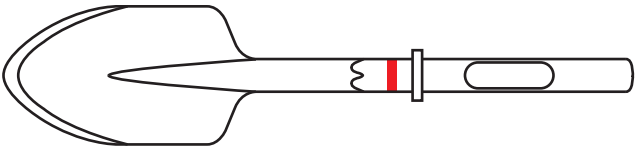

500 mm

TE-H28

400 mm

TE STP

150 x 150 mm

200 x 200 mm

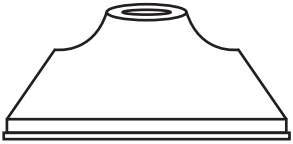

Hilti Corporation
LI-9494 Schaan
Tel.: +423 / 234 21 11
Fax: +423 / 234 29 65
www.hilti.com

Hilti = registered trademark of Hilti Corp., Schaan W 3750 1209 00-Pos. 8 1 Printed in Liechtenstein © 2009
Right of technical and programme changes reserved S. E. & O.

426348 / A

426348

ORIGINAL OPERATING INSTRUCTIONS

TE 3000-AVR breaker

It is essential that the operating instructions are read before the power tool is operated for the first time.

Always keep these operating instructions together with the power tool.

Ensure that the operating instructions are with the power tool when it is given to other persons.

Contents	Page
1. General information	17
2. Description	19
3. Accessories, consumables	20
4. Technical data	21
5. Safety instructions	22
6. Before use	25
7. Operation	26
8. Care and maintenance	27
9. Troubleshooting	28
10. Disposal	29
11. Manufacturer's warranty - tools	29
12. EC declaration of conformity	30

1 These numbers refer to the corresponding illustrations. The illustrations can be found on the fold-out cover pages. Keep these pages open while studying the operating instructions.
In these operating instructions, the designation "the power tool" always refers to the TE 3000-AVR breaker.

en

Parts, operating controls and indicators 1

① Grip
② On / off switch
③ Service indicator
④ Theft protection indicator (option)
⑤ Supply cord
⑥ Chuck
⑦ Insert tool retainer / locking bar
⑧ Ventilation slots
⑨ Guide tube

Transport trolley components 2

① Grip
② Retaining bar
③ Holder for chisels and accessories
④ Power tool locating pin
⑤ Wheels
⑥ Wheel securing parts (washer, retaining pin)

1. General information

1.1 Safety notices and their meaning

DANGER
Draws attention to imminent danger that could lead to serious bodily injury or fatality.

WARNING
Draws attention to a potentially dangerous situation that could lead to serious personal injury or fatality.

CAUTION
Draws attention to a potentially dangerous situation that could lead to slight personal injury or damage to the equipment or other property.

NOTE
Draws attention to an instruction or other useful information.

1.2 Explanation of the pictograms and other information

Prohibition signs

Transport by crane is not permissible.

en

Warning signs

General warning

Warning: electricity

Warning: hot surface

Obligation signs

Wear eye protection

Wear a hard hat

Wear ear protection

Wear protective gloves

Wear safety shoes

Wear breathing protection

Symbols

Read the operating instructions before use

Return waste material for recycling.

V
Volts

A
Amps

W
Watts

Alternating current

Hz
Hertz

Double insulated

Lock symbol

Equipped with theft protection system

Location of identification data on the power tool

The type designation and serial number can be found on the type identification plate on the machine or tool. Make a note of this data in your operating instructions and always refer to it when making an enquiry to your Hilti representative or service department.

Type: _____

Generation: 02 _____

Serial no.: _____

2. Description

2.1 Use of the product as directed

The power tool is a hand-guided electric tool for chiseling on concrete, masonry and asphalt. Other applications are compacting and excavation (e.g. in soil).
Working on materials hazardous to the health (e.g. asbestos) is not permissible.
The power tool is designed for professional use and may be operated, serviced and maintained only by trained, authorized personnel. This personnel must be informed of any special hazards that may be encountered. The power tool and its ancillary equipment may present hazards when used incorrectly by untrained personnel or when used not as directed.
Its typical working environment is construction sites of all kinds and it may be used for construction work, finishing, renovation, demolition and road work.
The power tool may be used only in a dry environment.
Do not use the power tool where there is a risk of fire or explosion.
The power tool may be operated only when connected to a power supply providing a voltage and frequency in compliance with the information given on its type identification plate.
To avoid the risk of injury, use only genuine Hilti accessories and insert tools.
Observe the information printed in the operating instructions concerning operation, care and maintenance.
Modification of the power tool or tampering with its parts is not permissible.

en

2.2 Chuck

28 mm hex. chuck

2.3 Switch

On / off switch

2.4 Grips

Grips incorporating AVR Active Vibration Reduction

2.5 Lubrication

Permanent lubrication with separate lubrication chambers for the gearing and hammering mechanism.

2.6 Theft protection system (optional)

The power tool may be equipped with the TPS Theft Protection System as an option. If the power tool is equipped with this feature, it can be unlocked and made ready for operation only through use of the corresponding TPS key.

2.7 Protective features

Protection from high temperatures is provided by the casing around inner parts of the power tool.

2.8 Indicator LED

Service indicator LED (see section “Care and maintenance”)
Theft protection system indicator (optional) (see section “Operation”)

2.9 Protection against overheating

The power tool is equipped with a protective overheating cut-out that switches the power off for a short time. Overheating is indicated by an LED blinking.

2.10 Items supplied as standard

1 Power tool
1 Operating instructions with pocket for attachment to the transport trolley
1 Transport trolley (optional)
1 Grease

en

2.11 Using extension cords

Use only extension cords of a type approved for the application and with conductors of adequate cross section. The power tool may otherwise lose performance and the extension cord may overheat. Check the extension cord for damage at regular intervals. Replace damaged extension cords.

Recommended minimum conductor cross section and max. cable lengths

Conductor cross section	1.5 mm²	2.0 mm²	2.5 mm²	3.5 mm²
Mains voltage 100V		20 m		30 m
Mains voltage 110-120 V			20 m	
Mains voltage 220-240 V	30 m		50 m	

Do not use extension cords with 1.25 mm² conductor cross section.

2.12 Using extension cords outdoors

When working outdoors, use only extension cords that are approved and correspondingly marked for this application.

2.13 Using a generator or transformer

This power tool may be powered by a generator or transformer when the following conditions are fulfilled: The unit must provide a power output in watts of at least twice the value printed on the type identification plate on the power tool. The operating voltage must remain within +5% and -15% of the rated voltage at all times, frequency must be in the 50 – 60 Hz range and never above 65 Hz, and the unit must be equipped with automatic voltage regulation and starting boost. Generators with an inadequate power rating may cause damage to the power tool.

Never operate other power tools or appliances from the generator or transformer at the same time. Switching other power tools or appliances on and off may cause undervoltage and / or overvoltage peaks, resulting in damage to the power tool.

In addition, the power tool may not start or may cut out (no LED indication) if the electric supply is not within specifications (see “Troubleshooting” section).

3. Accessories, consumables

TPS Theft Protection System with Company Card,
Company Remote and TPS-K key (optional)

Use the Hilti chisels or other tools listed below. With these you will achieve higher performance and longer lifetime as the power tool and chisels have been optimized as a system.

	Designation	Width (mm)	Length (mm)	Width in inches	Length in inches
Pointed chisels	TE-H28P SM 40		400		16

	Designation	Width (mm)	Length (mm)	Width in inches	Length in inches
Pointed chisels	TE-H28P SM 50		500		20
Flat chisels	TE-H28P FM 40	38	400	1½	16
	TE-H28P FM 50	38	500	1½	20
Wide-flat chisels	TE-H28P SPM 8/40	80	400	3⅛	16
	TE-H28P SPM 8/50	80	500	3⅛	20
Asphalt chisel	TE-H28P SPMA 45	125	450	5	18
Pointed flat chisel	TE-H28P SPI 50	115	500	4½	20
Shank	TE-H28 SS 40		400		16
Tamping plate	TE STP 150x150	150x150		6x6	
	TE STP 200x200	200x200		8x8	

en

4. Technical data

Right of technical changes reserved.

NOTE
The power tool is available in various voltage ratings. Please refer to the type identification plate for details of the power tool's voltage and power rating.

Rated voltage	100 V	110 V	220 V	230 V	240 V
Rated power input	1,500 W	1,760 W	2,070 W	2,070 W	2,070 W
Rated current input	15 A	16 A	9.4 A	9 A	8.6 A

Power tool	TE 3000-AVR
Mains frequency	50…60 Hz
Weight in accordance with EPTA procedure 01/2003	29.9 kg
Dimensions (L x W x H)	808 mm x 610 mm x 209 mm
Hammering frequency under load	860/min
Single impact energy	68 J
Weight of transport trolley	10.8 kg

NOTE
The vibration emission level given in this information sheet has been measured in accordance with a standardised test given in EN 60745 and may be used to compare one tool with another. It may be used for a

preliminary assessment of exposure. The declared vibration emission level represents the main applications of the tool. However if the tool is used for different applications, with different accessories or poorly maintained, the vibration emission may differ. This may significantly increase the exposure level over the total working period. An estimation of the level of exposure to vibration should also take into account the times when the tool is switched off or when it is running but not actually doing the job. This may significantly reduce the exposure level over the total working period. Identify additional safety measures to protect the operator from the effects of vibration such as: maintain the tool and the accessories, keep the hands warm, organisation of work patterns.

Noise and vibration information (measured in accordance with EN 60745):

Typical A-weighted sound power level, TE 3000-AVR	105 dB (A)
Typical A-weighted emission sound pressure level, TE 3000-AVR	94 dB (A)
Uncertainty for the given sound level for the TE 3000-AVR	3 dB (A)

Additional information in accordance with EN 60745-1

Triaxial vibration values (vibration vector sum)	measured in accordance with EN 60745-2-6
Chiseling, $a_{h, Cheq}$	7 m/s²
Uncertainty (K)	1.5 m/s²

Information about the power tool and its applications

Protection class as per EN	Protection class II (double insulated)

5. Safety instructions

NOTE
The safety rules in section 5.1 contain all general safety rules for power tools which, in accordance with the applicable standards, require to be listed in the operating instructions. Accordingly, some of the rules listed may not be relevant to this tool.

5.1 General Power Tool Safety Warnings

a) **WARNING! Read all safety warnings and all instructions.** Failure to follow the warnings and instructions may result in electric shock, fire and/or serious injury. **Save all warnings and instructions for future reference.** The term “power tool” in the warnings refers to your mains-operated (corded) power tool or battery-operated (cordless) power tool.

5.1.1 Work area safety

a) **Keep work area clean and well lit.** Cluttered or dark areas invite accidents.
b) **Do not operate power tools in explosive atmospheres, such as in the presence of flammable liquids, gases or dust.** Power tools create sparks which may ignite the dust or fumes.
c) **Keep children and bystanders away while operating a power tool.** Distractions can cause you to lose control.

5.1.2 Electrical safety

a) **Power tool plugs must match the outlet. Never modify the plug in any way. Do not use any adapter plugs with earthed (grounded) power tools.** Unmodified plugs and matching outlets will reduce risk of electric shock.
b) **Avoid body contact with earthed or grounded surfaces, such as pipes, radiators, ranges and refrigerators.** There is an increased risk of electric shock if your body is earthed or grounded.
c) **Do not expose power tools to rain or wet conditions.** Water entering a power tool will increase the risk of electric shock.
d) **Do not abuse the cord. Never use the cord for carrying, pulling or unplugging the power tool. Keep cord away from heat, oil, sharp edges or moving parts.** Damaged or entangled cords increase the risk of electric shock.
e) **When operating a power tool outdoors, use an extension cord suitable for outdoor use.** Use of a

cord suitable for outdoor use reduces the risk of electric shock.

f) **If operating a power tool in a damp location is unavoidable, use a residual current device (RCD) protected supply.** Use of an RCD reduces the risk of electric shock.

5.1.3 Personal safety

a) **Stay alert, watch what you are doing and use common sense when operating a power tool. Do not use a power tool while you are tired or under the influence of drugs, alcohol or medication.** A moment of inattention while operating power tools may result in serious personal injury.

b) **Use personal protective equipment. Always wear eye protection.** Protective equipment such as dust mask, non-skid safety shoes, hard hat, or hearing protection used for appropriate conditions will reduce personal injuries.

c) **Prevent unintentional starting. Ensure the switch is in the off-position before connecting to power source and/or battery pack, picking up or carrying the tool.** Carrying power tools with your finger on the switch or energising power tools that have the switch on invites accidents.

d) **Remove any adjusting key or wrench before turning the power tool on.** A wrench or a key left attached to a rotating part of the power tool may result in personal injury.

e) **Do not overreach. Keep proper footing and balance at all times.** This enables better control of the power tool in unexpected situations.

f) **Dress properly. Do not wear loose clothing or jewellery. Keep your hair, clothing and gloves away from moving parts.** Loose clothes, jewellery or long hair can be caught in moving parts.

g) **If devices are provided for the connection of dust extraction and collection facilities, ensure these are connected and properly used.** Use of dust collection can reduce dust-related hazards.

5.1.4 Power tool use and care

a) **Do not force the power tool. Use the correct power tool for your application.** The correct power tool will do the job better and safer at the rate for which it was designed.

b) **Do not use the power tool if the switch does not turn it on and off.** Any power tool that cannot be controlled with the switch is dangerous and must be repaired.

c) **Disconnect the plug from the power source and/or the battery pack from the power tool before making any adjustments, changing accessories, or storing power tools.** Such preventive safety measures reduce the risk of starting the power tool accidentally.

d) **Store idle power tools out of the reach of children and do not allow persons unfamiliar with the power tool or these instructions to operate the power tool.** Power tools are dangerous in the hands of untrained users.

e) **Maintain power tools. Check for misalignment or binding of moving parts, breakage of parts and any other condition that may affect the power tool's operation. If damaged, have the power tool repaired before use.** Many accidents are caused by poorly maintained power tools.

f) **Keep cutting tools sharp and clean.** Properly maintained cutting tools with sharp cutting edges are less likely to bind and are easier to control.

g) **Use the power tool, accessories and tool bits etc. in accordance with these instructions, taking into account the working conditions and the work to be performed.** Use of the power tool for operations different from those intended could result in a hazardous situation.

5.1.5 Service

a) **Have your power tool serviced by a qualified repair person using only identical replacement parts.** This will ensure that the safety of the power tool is maintained.

5.2 Additional safety instructions

5.2.1 Personal safety

a) **Wear ear protectors.** Exposure to noise can cause hearing loss.

b) **Use auxiliary handle(s), if supplied with the tool.** Loss of control can cause personal injury.

c) **Hold power tool by insulated gripping surfaces, when performing an operation where the cutting accessory may contact hidden wiring or its own cord.** Cutting accessory contacting a "live" wire may make exposed metal parts of the power tool "live" and could give the operator an electric shock.

d) **Always hold the power tool securely with both hands on the grips provided. Keep the grips dry, clean and free from oil and grease.**

e) **If the insulation on the grips or parts of the casing is damaged, the parts must be replaced before operating the power tool.**
f) **Breathing protection must be worn and allergy sufferers must wear clothing that covers the skin if the work creates dust.**
g) **Improve the blood circulation in your fingers by relaxing your hands and exercising your fingers during breaks between working.**
h) **Always lead the supply cord and extension cord away from the power tool to the rear while working.** This helps to avoid tripping over the cord while working.
i) **Children must be instructed not to play with the appliance.**
j) **The appliance is not intended for use by children, by debilitated persons or those who have received no instruction or training.**
k) Dust from material such as paint containing lead, some wood species, minerals and metal may be harmful. Contact with or inhalation of the dust may cause allergic reactions and/or respiratory diseases to the operator or bystanders. Certain kinds of dust are classified as carcinogenic such as oak and beech dust especially in conjunction with additives for wood conditioning (chromate, wood preservative). Material containing asbestos must only be treated by specialists. **Where the use of a dust extraction device is possible it shall be used. To achieve a high level of dust collection, use a suitable vacuum cleaner of the type recommended by Hilti for wood dust and/or mineral dust together with this tool. Ensure that the workplace is well ventilated. The use of a dust mask of filter class P2 is recommended. Follow national requirements for the materials you want to work with.**

5.2.2 Power tool use and care

a) **Check that the insert tools used are compatible with the chuck system and that they are secured in the chuck correctly.**
b) **In case of an interruption in the electric supply: Switch the power tool off and unplug the supply cord.** This will prevent accidental restarting when the electric power returns.
c) **Always work from a secure, safe stance.**

5.2.3 Electrical safety

a) **Before beginning work, check the working area (e.g. using a metal detector) to ensure that no concealed electric cables or gas and water pipes are present.** External metal parts of the power tool may become live, for example, when an electric cable is damaged accidentally. This presents a serious risk of electric shock.
b) **Check the power tool's supply cord at regular intervals and have it replaced by a qualified specialist if found to be damaged. If the power tool's supply cord is damaged it must be replaced with a specially-prepared supply cord available from Hilti Customer Service. Check extension cords at regular intervals and replace them if found to be damaged. Do not touch the supply cord or extension cord if it is damaged while working. Disconnect the supply cord plug from the power outlet.** Damaged supply cords or extension cords present a risk of electric shock.
c) **Dirty or dusty power tools which have been used frequently for work on conductive materials should be checked at regular intervals at a Hilti Service Center.** Under unfavorable circumstances, dampness or dust adhering to the surface of the power tool, especially dust from conductive materials, may present a risk of electric shock.
d) **When working outdoors with an electric tool check to ensure that the tool is connected to the electric supply by way of a ground fault circuit interrupter (RCD) with a rating of max. 30 mA (tripping current).** Use of a ground fault circuit interrupter reduces the risk of electric shock.
e) **Use of a ground fault circuit interrupter (RCD residual current device) with a maximum tripping current of 30 mA is recommended.**

5.2.4 Work area

a) **Ensure that the workplace is well lit.**
b) **Ensure that the workplace is well ventilated.** Exposure to dust at a poorly ventilated workplace may result in damage to the health.

c) **If the work involves breaking right through, take the appropriate safety measures at the opposite side**. Parts breaking away could fall out and / or fall down and injure other persons.

d) **Be sure to keep an adequate distance from other persons and adjacent objects. If necessary, cordon off the area in which you are working.**

5.2.5 Personal protective equipment

The user and any other persons in the vicinity must wear suitable eye protection, a hard hat, ear protection, protective gloves, safety footwear and respiratory protection while the tool is in use.

en

6. Before use

CAUTION
The power tool must be disconnected from the electric supply.

CAUTION
Check the insert tool for damage each time before use.

6.1 Unlocking the power tool (theft protection system)

NOTE
See section “Using the TPS Theft Protection System”.

6.2 Use of extension cords and generators or transformers

Please refer to section 2 “Description”.

6.3 Transport

CAUTION
Use the transport trolley or other means of conveyance whenever possible. The power tool should always be carried by two persons if no transport trolley or means of conveyance is available for use. Be aware that the power tool plus transport trolley present a considerable weight.

CAUTION
Do not park the transport trolley on an incline.

CAUTION
Take care to use only safe transport routes.

CAUTION
Take care to ensure that the trolley stands in a steady, secure position.

6.4 Securing the power tool and chisels on the transport trolley 3

Place the power tool on the locating pin provided on the transport trolley and always secure it for transport by closing the retaining bar.
Put the chisels in the holder provided, pushing them in as far as they will go until held securely.

7. Operation

en

DANGER
Always hold the power tool securely with both hands on the grips provided. Keep the grips dry, clean and free from oil and grease.

7.1 Preparing for use

CAUTION
Wear protective gloves when changing insert tools as the insert tools get hot through use and they may have sharp edges.

CAUTION
When changing insert tools, take care to handle the locking mechanism correctly. You may otherwise risk pinching your fingers.

CAUTION
Avoid body contact with the guide tube as this part gets hot through use of the power tool.

7.1.1 Fitting the insert tool 4 5

NOTE
Use an insert tool of a length suitable for your body height.

1. Disconnect the mains plug from the power outlet.
2. Check that the connection end of the chisel is clean and lightly greased. Clean it and grease it if necessary.
3. Check that the chuck and locking bar are clean and undamaged.
4. Push the insert tool into the chuck and pivot the retaining bar to locking position A for insert tools with a collar or to locking position B for insert tools with a groove (position the chisel so that the groove is facing locking position B).
   NOTE Insert tools with a combined connection end (with collar and groove) can be locked in position A or B, as desired.
5. Check that the chisel has engaged correctly by pulling it.

7.1.2 Removing the chisel

DANGER
Do not lay a hot insert tool down on flammable materials. This could cause the material to ignite, resulting in a fire.

1. Disconnect the mains plug from the power outlet.
2. Open the locking bar by pivoting it approx. 90°.
3. Pull the chisel out of the chuck.

7.2 Operation

CAUTION
Working on the material may cause it to splinter. **Wear eye protection and protective gloves. Wear breathing protection if no dust removal system is used.** Splintering material presents a risk of injury to the eyes and body.

CAUTION
The work generates noise. **Wear ear protectors.** Exposure to noise can cause hearing loss.

CAUTION
Take care to stand in a secure position, especially when chiseling breaches in floors, walls or ceilings, and wear protective gloves and safety footwear. The power tool may pull you off balance if you break through suddenly.

CAUTION
Improve the blood circulation in your fingers by relaxing your hands and exercising your fingers during breaks between working.

CAUTION
Take care to ensure that the locking bar is in the correct position in accordance with the information provided in the operating instructions and check that the insert tool is held securely (check by pulling the insert tool). Secure the area below the working area.

CAUTION
Remove the insert tool before laying the power tool down or placing it on the transport trolley. Disconnect the mains plug from the power outlet.
Unintentional starting (accidental contact with the on / off switch) may cause the power tool to kick.

7.2.1 TPS Theft Protection System (optional)

NOTE
The power tool may be equipped with the optional theft protection system. If the power tool is equipped with this feature, it can be unlocked and made ready for operation only through use of the corresponding TPS key.

7.2.1.1 Unlocking the power tool

1. Plug the supply cord into the power outlet. The yellow theft protection indicator LED blinks. The power tool is now ready to receive the signal from the TPS key.
2. Hold the TPS key or the TPS watch strap buckle against the lock symbol. The power tool is unlocked as soon as the yellow theft protection indicator LED no longer lights.
   NOTE If, for example, the electric supply is briefly interrupted due to a power failure or disconnected when moving to a different workplace, the power tool remains ready for operation for approx. 20 minutes. In the event of a longer interruption, the TPS key must be used again to unlock the power tool.

7.2.1.2 Activation of the theft protection system for the power tool

NOTE
Further detailed information on activation and use of the theft protection system can be found in the operating instructions for the theft protection system.

7.2.2 Chiseling

NOTE
Working at low temperatures: The hammering mechanism works only when the power tool has reached a minimum operating temperature. Bring the chisel into contact with the base material and allow the power tool to run under no load until the minimum operating temperature is reached. If necessary, repeat this procedure until the hammering mechanism begins to operate.

7.2.2.1 Chiseling

1. Plug the mains plug of the supply cord into the power outlet.
2. Position the tip of the chisel at the point where chiseling is to begin.
3. Press the on / off switch fully.

7.2.2.2 Switching off

Release the on / off switch.

en

8. Care and maintenance

CAUTION
Disconnect the mains plug from the power outlet.

CAUTION
The power tool must always be checked by a Hilti specialist for internal or external damage whenever it has been dropped or fallen over.

8.1 Care of insert tools

Clean off dirt and dust deposits adhering to the insert tools and protect them from corrosion by wiping the insert tools from time to time with an oil-soaked rag.

8.2 Care of the power tool

The outer casing of the power tool is made from impact-resistant plastic. Sections of the grip are made from a synthetic rubber material.
Never operate the power tool when the ventilation slots are blocked. Clean the ventilation slots carefully using a dry brush. Do not permit foreign objects to enter the interior of the power tool. Clean the outside of the power tool at regular intervals with a slightly damp cloth. Do not use a spray, steam pressure cleaning equipment or running water for cleaning. This may negatively affect the electrical safety of the power tool. Always keep the grip surfaces of the power tool free from oil and grease. Do not use cleaning agents which contain silicone.

8.3 Service indicator

NOTE

The power tool is equipped with a service indicator.

Indicator	Constant red light	End of service interval - servicing is due. After the lamp lights for the first time, the power tool may continue to be used for several hours before the automatic cut-out is activated. To ensure that the power tool is always ready for use, it should be returned to Hilti for servicing in good time.

8.4 Maintenance

WARNING

Repairs to the electrical section of the power tool may be carried out only by trained electrical specialists.

Check all external parts of the power tool for damage at regular intervals and check that all controls operate faultlessly. Do not operate the power tool if parts are damaged or when the controls do not function faultlessly. If necessary, the power tool should be repaired by Hilti Service.

8.5 Checking the power tool after care and maintenance

After carrying out care and maintenance work on the power tool, check that all protective and safety devices are fitted and that they function faultlessly.

9. Troubleshooting

Fault	Possible cause	Remedy
The power tool doesn't start.	Electronics initialization in progress (takes up to 4 seconds after plugging in).	Switch the power tool off and on again.
	Interruption in the electric supply.	Plug in another electric appliance and check whether it works.
	The supply cord or plug is defective.	Have it checked by a trained electrical specialist and replaced if necessary.
	Generator with sleep mode.	Apply a load to the generator by connecting another appliance (e.g. a lamp). Subsequently switch the power tool off and on again.
No hammering action.	The power tool is too cold.	Allow the power tool to warm up to the minimum operating temperature. See section: 7.2.2 Chiseling
	A fault has occurred in the power tool.	If necessary, the power tool should be repaired by Hilti Service.
The power tool doesn't start or cuts out during operation and the LED blinks red.	Temporary fault (e.g. overheating or overvoltage).	Release the switch and allow the power tool to cool down or connect it to a different electric supply.
The power tool doesn't start or cuts out during operation and the LED lights red constantly.	Advance warning of need for servicing.	Have the power tool serviced or repaired by Hilti Service.

Fault	Possible cause	Remedy
The power tool doesn't start and the indicator lamp blinks yellow.	The power tool has not been unlocked (power tools with optional theft protection system).	Use the TPS key to unlock the power tool.
The power tool doesn't start or cuts out during operation.	The extension cord is too long or its gauge is inadequate.	Use an extension cord of an approved length and / or of adequate gauge.

en

NOTE
If the fault cannot be eliminated by the measures listed above, have the power tool checked by Hilti Service.

10. Disposal

Most of the materials from which Hilti power tools or appliances are manufactured can be recycled. The materials must be correctly separated before they can be recycled. In many countries, Hilti has already made arrangements for taking back your old power tools or appliances for recycling. Please ask your Hilti customer service department or Hilti representative for further information.

For EC countries only

Disposal of electric tools together with household waste is not permissible.

In observance of European Directive 2002/96/EC on waste electrical and electronic equipment and its implementation in accordance with national law, electric tools that have reached the end of their life must be collected separately and returned to an environmentally compatible recycling facility.

11. Manufacturer's warranty - tools

Hilti warrants that the tool supplied is free of defects in material and workmanship. This warranty is valid so long as the tool is operated and handled correctly, cleaned and serviced properly and in accordance with the Hilti Operating Instructions, and the technical system is maintained. This means that only original Hilti consumables, components and spare parts may be used in the tool.

This warranty provides the free-of-charge repair or replacement of defective parts only over the entire lifespan of the tool. Parts requiring repair or replacement as a result of normal wear and tear are not covered by this warranty.

Additional claims are excluded, unless stringent national rules prohibit such exclusion. In particular, Hilti is not obligated for direct, indirect, incidental or consequential damages, losses or expenses in connection with, or by reason of, the use of, or inability to use the tool for any purpose. Implied warranties of merchantability or fitness for a particular purpose are specifically excluded.

For repair or replacement, send the tool or related parts immediately upon discovery of the defect to the address of the local Hilti marketing organization provided.

This constitutes Hilti's entire obligation with regard to warranty and supersedes all prior or contemporaneous comments and oral or written agreements concerning warranties.

12. EC declaration of conformity

Designation:	Breaker
Type:	TE 3000-AVR
Year of design:	2009

en

We declare, on our sole responsibility, that this product complies with the following directives and standards: until 28.12.2009 98/37/EC, as of 29.12.2009 2006/42/EC, 2004/108/EC, EN 60745-1, EN 60745-2-6, EN 55014-1, EN 55014-2, EN 61000-3-2, EN 61000-3-3.

Measured sound power level, L_{WA}	105 dB/1pW
Guaranteed sound power level, L_{WAd}	108 dB/1pW
Conformity assessment procedure	2000/14/EC annex VI
Authorized assessment office (0044)	TÜV NORD CERT GmbH Hannover office Am TÜV 1 30519 Hannover Germany
EU conformity assessment no.	CE 0044 - 310 09 013 6 002

Hilti Corporation

Jan Doongaji
Senior Vice President
Business Unit Drilling and Demolition
10 2009

Dietmar Sartor
Head of BA Quality and Process Management
Business Area Electric Tools & Accessories
10 2009