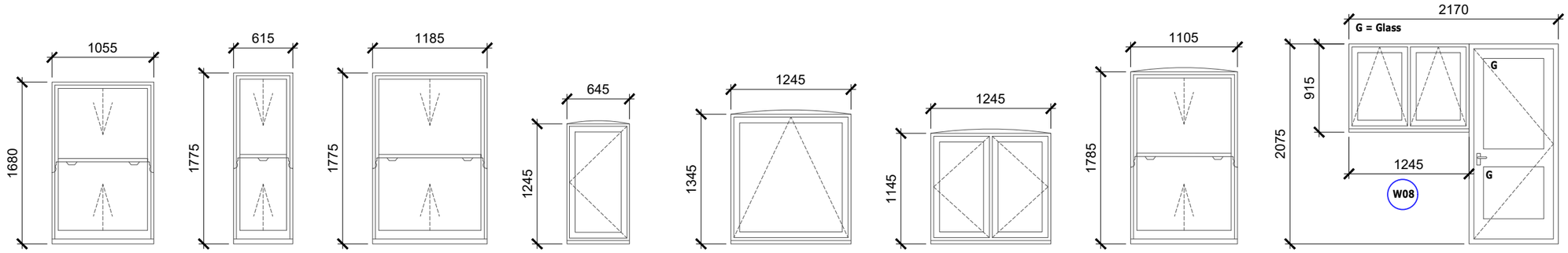

Existing material: Timber Glazing: Single W01 2.no	Existing material: Timber Glazing: Single W02 2.no	Existing material: Timber Glazing: Single W03 1.no	Existing material: Timber Glazing: Single W04 1.no
Existing material: Timber Glazing: Single W05 1.no	Existing material: Timber Glazing: Single W06 1.no	Existing material: Timber Glazing: Single W07 1.no	Existing material: Timber Glazing: Single D01 1.no

1 Existing Window & Door Schedule

Scale:1:50 @ A3

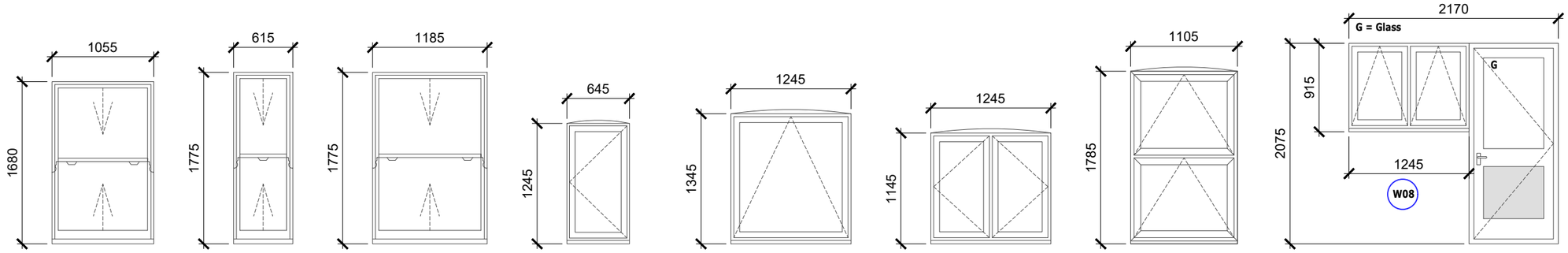

Proposed material: uPVC Glazing: Double W01 2.no	Proposed material: uPVC Glazing: Double W02 2.no	Proposed material: uPVC Glazing: Double W03 1.no	Proposed material: uPVC Glazing: Double W04 1.no
Proposed material: uPVC Glazing: Double W05 1.no	Proposed material: uPVC Glazing: Double W06 1.no	Proposed material: uPVC Glazing: Double W07 1.no	Proposed material: uPVC Glazing: Double D01 1.no

2 Proposed Window & Door Schedule

Scale:1:50 @ A3

Scale Bar 1:50

Rev	Description	By	QA	DD.MM.YY
P1	Planning	TVS	DM	05.07.26

© This drawing and any design hereon is the copyright of Potter Raper and must not be reproduced without their written consent. All drawings remain the property of Potter Raper. Figured dimension only to be taken from this drawing. All dimensions to be checked on site. Please inform Potter Raper immediately of any discrepancies before work proceeds.

Client
Wates / Clarion

Project Name
Capital Works 2026 / 27

Project Location
13 Elmar Road, Haringey, London, N15 5DH

Sheet Name
Existing and Proposed Window & Door Schedules

Project Status
Planning

Drawing Nr.
12235-PR-ER_13-ZZ-DR-A-PL401

Scale
1:50 @ A3

POTTER RAPER
Duncan House
1A Burnhill Road
Beckenham
Kent
BR3 3LA
Tel: 020 8658 3538