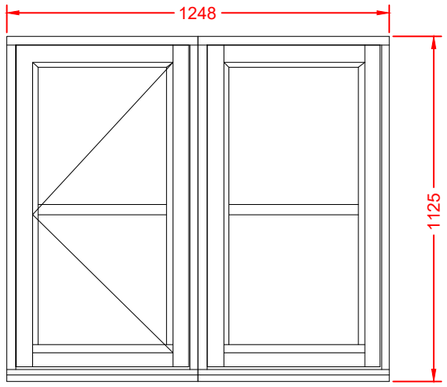

Type 1

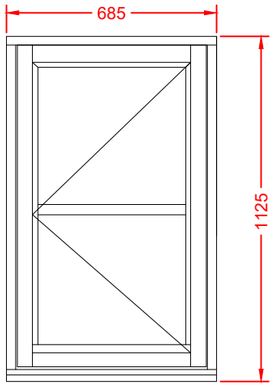

Type 2

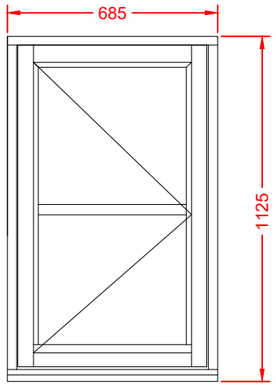

Type 3

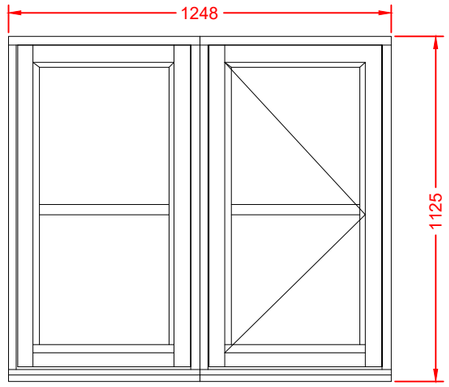

Type 4

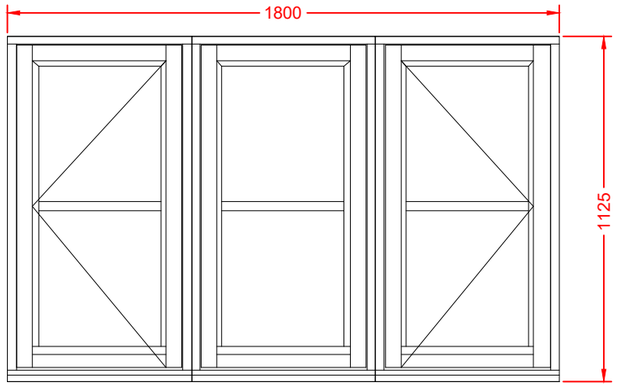

Type 5

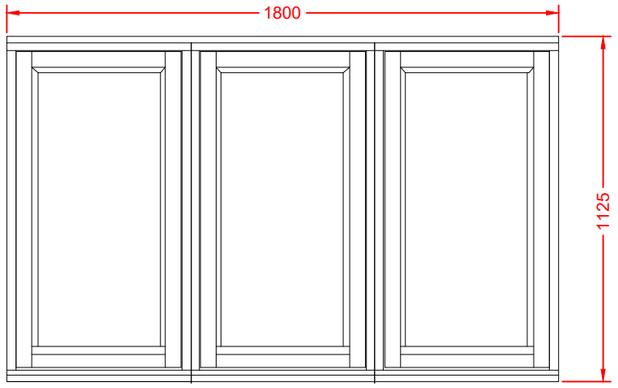

Type 6

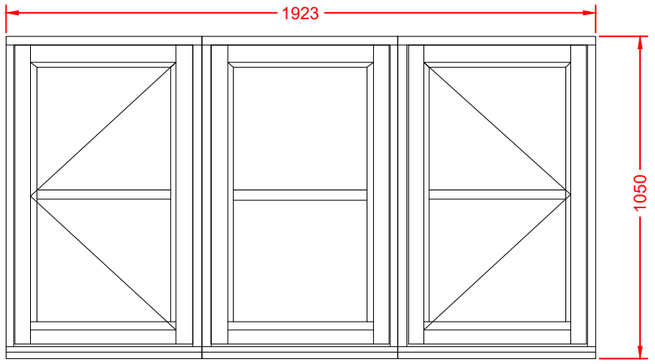

Type 7

`Profile22 Optima' PVC-u double glazed window to replace existing. Style and colour of new window to match existing.

NOTE:

This drawing is for Planning purposes only.
All openings are to be site measured by Window manufacture prior to fabrication.

0 1m

SCALE 1:20

General Notes:
- Do not scale from this drawing
- All dimensions are to be checked and confirmed on site prior to any ordering of materials or structural elements.
- Unless stated otherwise, this drawing has been produced for planning and building regulations only and should not be used for construction.
- If applicable, property owners to ensure that all party wall act agreements are in place prior to commencement of works if in doubt, ask.
- Client and Contractor to be aware of the relevant and current CDM 2015 Regulations. Domestic Client duties to be delegated to the contractor (Single contractor schemes) or "Principal Contractor" for projects with more than one contractor.
- Drawings are to be read in conjunction with all pre-construction information, planning approval documentation and relevant structural drawings/calculations.
- Any structural information indicated on these architectural drawings is for indicative purposes only.

Working in association with:

EQUANS

L&Q

Revision:	Description:	Date:	Rev by:	Checked by:
-	-	---	---	---

Title: Window Type Elevations

Client: Equans Regeneration & L&Q

Project: Proposed Window & Door Replacement

Project Address: 15-22 Malden Court, Finsbury Park Avenue, Haringey, N4 1UH

Status: Planning

Dwg No: 26022_P_004-05

Scale: 1:20

Size: A3

Date: June 2026

Drawn by: GAP

Retrofit Design Services (UK) Ltd.
Salts Mill, Victoria Road,
Saltaire,
Shipley,
BD18 3LA

admin@retrofit-design.co.uk
www.retrofit-design.co.uk
tel: 0330 043 3432

Retrofit Design Services (UK)