INFORMATION CONTAINED IN THIS DRAWNG IS THE SOLE COPYRIGHT OF DLA ARCHITECTURE LTD AND IS NOT TO BE REPRODUCED WITHOUT PERMISSION

DO NOT SCALE, REFER TO FIGURED DIMENSIONS ONLY

REVISIONS

P01	Planning Application Issue	28/08/2026

BAY STUDY 04 - ELEVATION

1 : 25

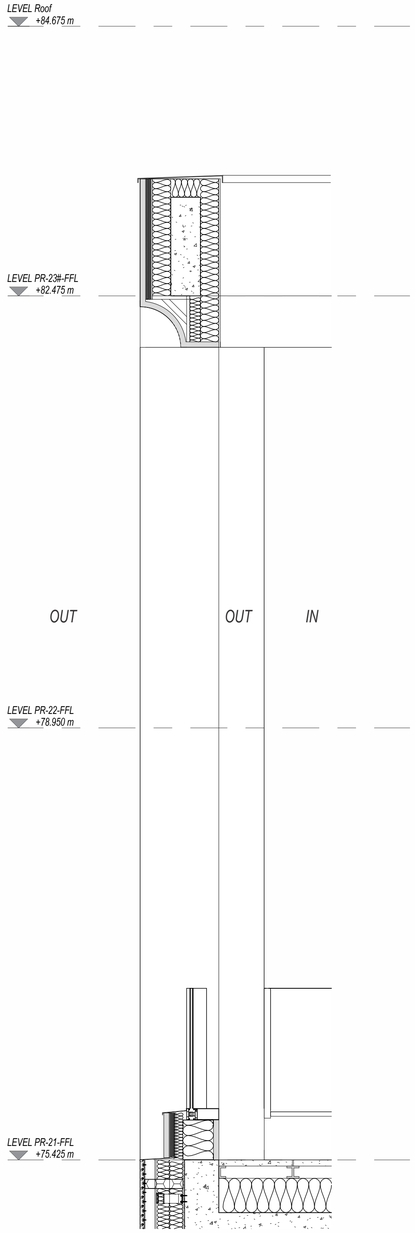

BAY STUDY 04 - SECTION 01

1 : 25

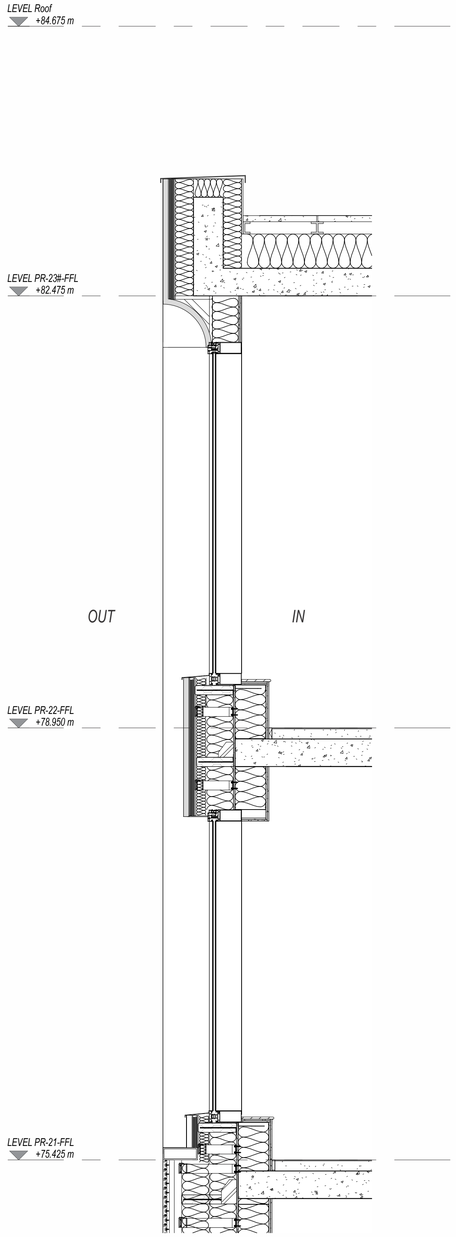

BAY STUDY 04 - SECTION 02

1 : 25

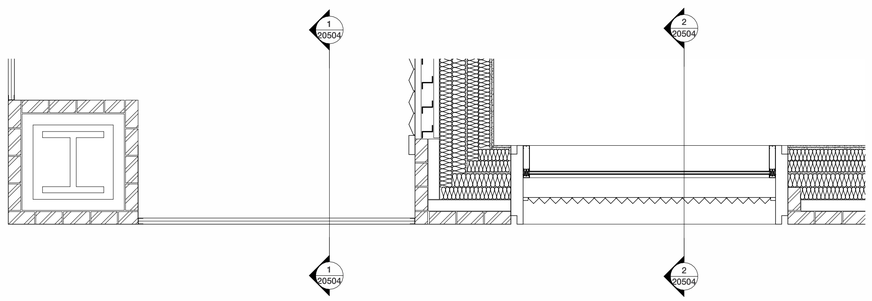

BAY STUDY 04 - PLAN

1 : 25

SCALE 1:25 0 0.2 0.5 1 2 m

SHARED LIVING:	
A1	Brickwork - Grey
A2	Brickwork - Dark Grey - Banding
A3	Brickwork - Light Grey
A4	Brickwork - Dark Grey - Recessed Stacked (Vertical)
A5	Brickwork - Dark Grey - Speckled Pattern
A6	Brickwork - Dark Grey - Artwork Pattern
A7	Glazed Terracotta - Zig-zag Tight Profile - Green RAL 6001
A8	Glazed Terracotta - Zig-zag Wide Profile - Green RAL 6001
A9	PPC Aluminium - Zig-zag Wide Profile - Green RAL 6001
A10	PPC Aluminium - Zig-zag Tight Profile - Green RAL 6001
A11	PPC Aluminium - Dark Grey Tone
A12	PPC Aluminium - Green RAL 6001
A13	PPC Aluminium - Zig-zag Wide Profile - Dark Grey Tone
A14	PPC Aluminium - Zig-zag Tight Profile - Dark Grey Tone
A15	PPC Aluminium - Zig-zag Tight Profile - Perforated - Dark Grey Tone
A16	Concrete-style Material - Light Grey Tone - Piers, Lintels, and Banding
A17	Concrete-style Material - Dark Grey Tone - Piers, Lintels, and Banding

FOR PLANNING ONLY

These drawings reflect the currently proposed scheme at RIBA Stage 2. They should be read in conjunction with the Design and Access Statement prepared by DLA Architecture Ltd.

These should also be read in conjunction with the following information, prepared by other consultants, to demonstrate a coordinated design proposal at RIBA Stage 2:

- *Structural Engineers Drawings and Specification (Whitby Wood)*
- *MEP Engineers Drawings and Specification (Meinhardt)*
- *Fire Report (Ashton Fire)*
- *Landscape Drawings and Specification (Bosk Studio)*

EXTENTS AND BOUNDARIES:

Existing site information, context, surrounding infrastructure, neighbouring building extents and plots are derived from 2D Surveys, produced by:
'Cloud 10 Ltd'
Drawing numbers: 2049-T(2) Topographical Survey

NOTES

All workspace furniture layouts are indicative only
All unit layouts are indicative only
Cycle store layouts are indicative only
Student and Shared Living amenity spaces are only indicative and subject to operator specifications

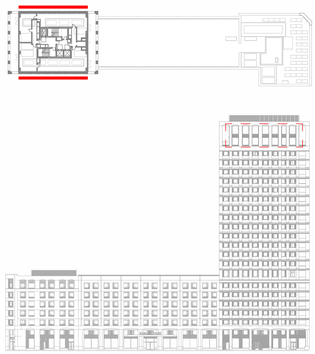

1 Naoroji Street Clerkenwell London WC1X 0GB
0207 553 3030
www.dla-architecture.co.uk

PROJECT
Ashley House Tottenham Hale

TITLE
BAY STUDY 04 - INDICATIVE CO-LIVING BUILDING

SCALE	DATE
As indicated @ A1	28/08/2026

DLA REF	DRAWN	REVIEWED
2025-032	TS	CJ

DOCUMENT NUMBER
AHCF-DLA-Z1-ZZ-DR-A- **20504**

DOCUMENT PURPOSE	REVISION
PLANNING	**P01**