# RMTTree Consultancy Ltd

36 Chetwode Place, Aldershot, Hants, GU12 4BS – Email: rmttreeconsultancy@gmail.com
Tel: 07921 313967




# BS5837:2012
# Arboricultural Survey
# Impact Assessment
# &
# Arboricultural Method Statement

## Site Address:
## Tottenham Hale Station TfL Site
## Cygnet Way
## London


**Robert Toll**
**HND Urban Forestry - ND Forestry - MArborA**


**Ref: RMT1162REVC**
**Site inspection date: 1st September 2025**
**Date report published: 24th September 2025**
**Date report revised: 18th August 2026**
**Prepared for Fast Places Limited**

Arboricultural ASSOCIATION Professional Member
PRO2239

## Contents


| Ref no. | Title | Page no. |
|---|---|---|
| | Title Page | |
| | Contact and Report Details | |
| | Contents | |
| 1 | Instruction | 1 |
| 2 | Introduction | 1 |
| | - Site description | 1 |
| | - Limitations | 2 |
| | - Legal restrictions | 2 |
| | - Tree survey | 2 |
| | - Canopy spreads | 3 |
| | - Root protection areas | 3 |
| | - U category tree | 3 |
| 3 | Soil Assessment | 4 |
| 4 | Arboricultural Impact Assessment | 5 |
| | - Arboricultural impact assessment overview | 5 |
| | - Access facilitation pruning | 5 |
| | - Tree removals | 5 |
| | - Tree protection fencing | 5 |
| | - Sensitive surface demolition | 5 |
| | - Sensitive fence removal | 5 |
| | - New boundary fence posts | 6 |
| | - Areas for site compounds, storage and mixing | 6 |
| | - Services | 6 |
| | - Conclusions | 6 |
| 5 | Arboricultural Method Statement | 7 |
| | - Access facilitation works | 7 |
| | - Pre-commencement | 7 |
| | - Protective barriers/fencing | 7 |
| | - Warning signs | 8 |
| | - Sensitive demolition of surfaces within RPAs | 9 |
| | - Sensitive demolition of perimeter fence within RPAs | 9 |
| | - Sensitive excavations for fence posts | 9 |

Appendices

| | |
|---|---|
| Appendix 1 – British Standard 5837:2012 tree categorisation chart | 10 |
| Appendix 2 – Tree survey schedule | 11 |
| Appendix 3 – Tree Constraints Plan – RMT1162 – TCP – REV C | 13 |
| Appendix 4 – Tree Protection Plan – RMT1162 – TPP – REV C | 14 |
| Appendix 5 – Arboricultural site supervision schedule | 15 |
| Appendix 6 – Site monitoring form | 16 |
| Appendix 7 – Qualifications and experience | 17 |

## 1 Instructions

**1.1** On the 18th August 2025 I was instructed on behalf of the client by the Planning Consultants Lichfields to undertake a survey of trees that are on or adjacent to Tottenham Hale Station TfL Site, Cygnet Way, London in accordance with *British Standard 5837:2012 Trees in relation to design, demolition and construction – Recommendations*.

**1.2** I am a qualified arboriculturalist as it is detailed at **Appendix 7** and this report has been produced in support of a planning application to London Borough of Haringey for 8 electric vehicle charging points; covering canopy; an ancillary unit providing toilet facilities and a waiting/seating area; landscaping; and associated works

## 2 Introduction

### Site Description

**2.1** The site is a former car park to the north of Tottenham Hale station. The site is level and is covered by tarmac. The northern and western perimeters of the site have 1.5m high metal security fence and the eastern boundary is a brick wall. The southern boundary is formed of a security fence on a retaining structure, with gates in the south-western corner.

**Image 1** – The proposal site at Tottenham Hale Station TfL Site, Cygnet Way, London is shown by the red line. The dark blue line shows the London Underground Limited ownership boundary, the light blue shows the London Bus Services Limited ownership boundary and the green line shows Network Rail ownership boundary

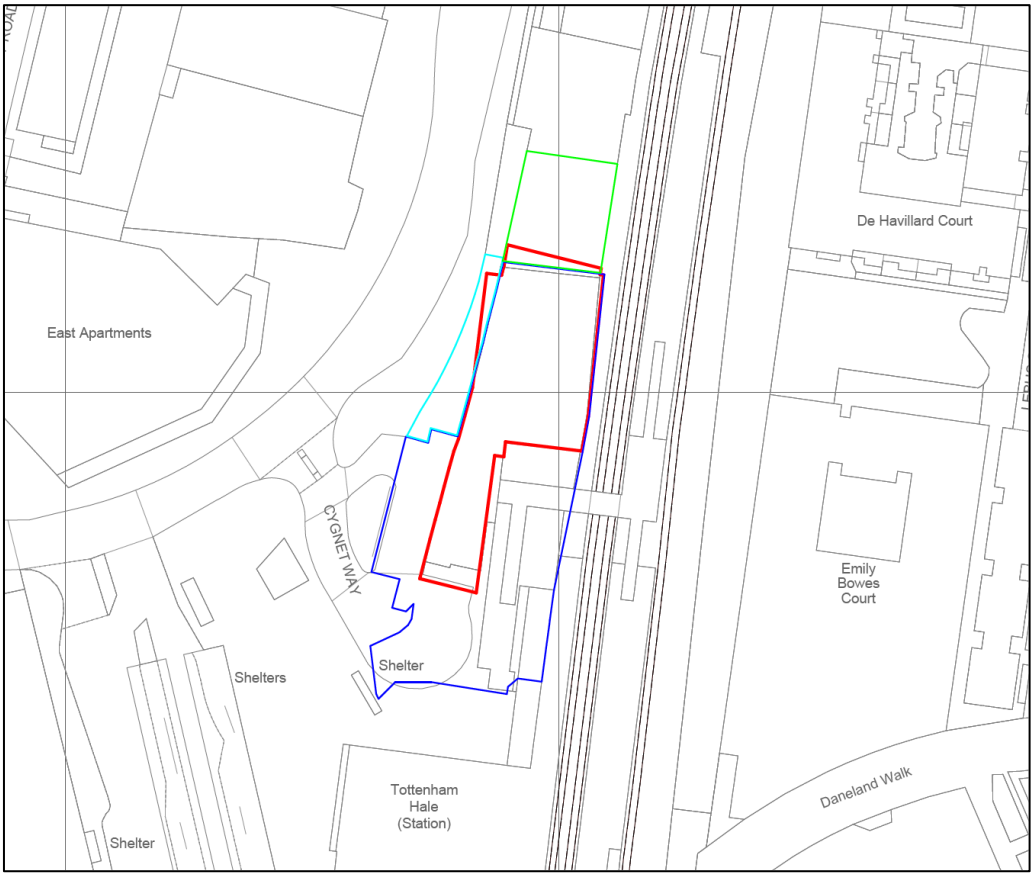

## Limitations

**2.2** I carried out the survey from ground level with the aid of a Bosch GLM 120 C Professional Laser Measure to measure distances, a Nikon Forestry Pro height measurer and diameter tape.

**2.3** Prior to my visit I was supplied with a topographical survey showing the growing locations of the surveyed trees.

**2.4** Measurements taken to calculate root protection areas and canopy spreads have been measured wherever possible. Where it has not been possible to access certain areas, dimensions have been estimated.

**2.5** Where possible diameter measurements have been measured using a diameter tape at a height of 1.5m. Where it has not been possible to access the stems at 1.5m above ground level due to such things as dense Ivy, trees are offsite or trees are inaccessible, then an estimated measurement has been taken. Estimated measurements include the abbreviation “est” in the tree survey schedule shown at **Appendix 2**.

**2.6** In some instances the diameter measurement has been taken at a height other than 1.5m due to such things as low fork unions. Where this has occurred, I have detailed this in the tree survey schedule shown at **Appendix 2**.

**2.7** This report does not constitute a safety survey of the trees included within it. It is advised that if there are concerns regarding the risk posed by trees to persons and property then a tree condition inspection should be commissioned.

## Legal Restrictions

**2.8** I have not contacted the local planning authority (LPA) directly to ascertain whether the trees on or adjacent to the site are protected by Tree Preservation Orders (TPO) or if they are within a Conservation Order.

**2.9** On the 24th September 2025 I carried out a check on the London Borough of Haringey online protected tree maps and they indicate that there is no statutory protection on any of the surveyed trees.

**2.10** It is an offence under the Wildlife and Countryside Act 1981 and the Rights of Way Act 2000 to disturb nesting birds or roosting/breeding bats. When carrying out tree work care should be taken to avoid disturbance. If necessary, advice should be taken to avoid disturbance. If necessary, advice may need to be sought from a qualified Ecologist.

## Tree survey

**2.11** I visited the site on 1st September 2025 and surveyed a total of eight trees and one group. The surveyed trees and group have been categorised in accordance with British Standard 5837:2012 as shown at **Appendix 1** and the tree survey schedule can be seen at **Appendix 2**.

**2.12** At the time of my survey the trees are considered to be category C or U and low value.

**Table 1** – Tree categorisations as BS5837:2012

| Category A | Category B | Category C | Category U |
|---|---|---|---|
| - | - | G1, T2, T3, T4, T6, T7, T8, T9 | T5 |

**2.13** It was noted that there are other trees that are located on or adjacent to Tottenham Hale Station TfL Site, Cygnet Way, London but they have not been included within this report. This is because it is deemed that they are:

- far enough from the area proposed for development that they will not be affected;
- they will be adequately protected by the tree protection measures afforded to the surveyed trees;
- they are specimens of limited significance;

**Canopy spreads**

**2.14** The canopy spreads have annotated on the tree constraints plan and tree protection plan at **Appendices 3 and 4**.

**Root protection area (RPA) definition**

**2.15** The RPA is a layout design tool indicating the minimum area around a tree deemed to contain sufficient roots and rooting volume to maintain the tree's viability and where the protection of the roots and soil structure are treated as a priority.

*(British Standard 5837:2012 – Trees in relation to design, demolition and construction – Recommendations – The British Standard Institute 2012).*

**U category tree**

**2.16** Tree T5 is considered to be U category due its poor physiological and structural condition. It is therefore considered not be a material planning constraint so its RPA and crown spreads have not been shown on the accompanying Tree Protection Plan at **Appendix 4**.

## 3 Soil Assessment

**3.1** The soil assessment is necessary to establish whether the soil on the proposal site is shrinkable. Tree roots and those of other vegetation have the potential to extract moisture from shrinkable soils such as clay, making the soil expand and contract as the soil desiccates and re-hydrates. Where new structures are proposed on shrinkable soils and close to trees, foundations will need to be sufficiently deepened or able to withstand to minimise the risk of indirect damage to foundations.

**3.2** No soil assessments have been provided however a check the British Geological Survey gives the soil type as London Clay Formation - Clay, silt and sand. This means that the underlying soil is shrinkable and as such foundations will need to be deepened. If further assessments are undertaken that show that there is shrinkable clay, then foundations must be designed in accordance with the guidance within the National House Building Council's Standards Chapter 4.2 Building near trees.

**Figure 1** – The British Geological Survey indicates that the soil make up at Tottenham Hale Station TfL Site, Cygnet Way, London is shrinkable London Clay Formation - Clay, silt and sand.

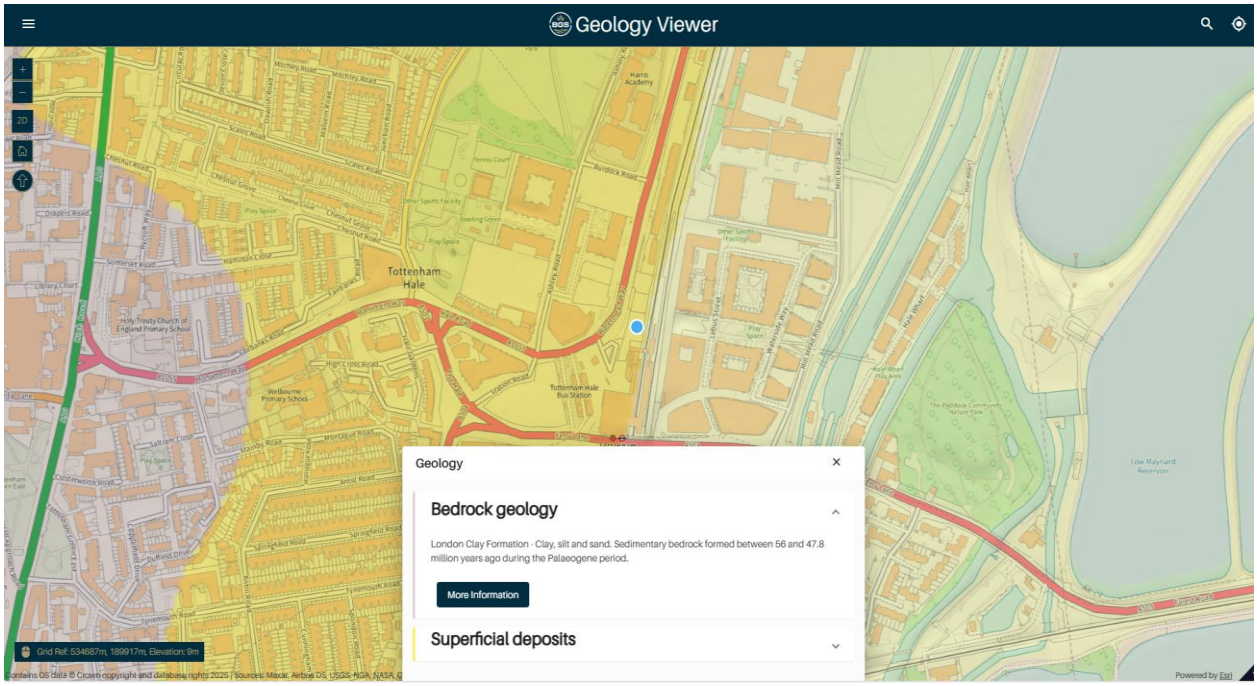

## 4 Arboricultural Impact Assessment

### Arboricultural Impact Assessment overview

**4.1** The arboricultural impact assessment assesses the direct and indirect effects of the proposed design on trees that are growing or adjacent to the site. Where appropriate mitigation will be recommended to prevent or minimise harm and details mitigation as appropriate. Consideration will be given to the practicality of the design and the viability of tree retention.

### Access facilitation pruning

**4.2** To maintain adequate clearances for construction, it will be necessary to crown lift the eastern lateral spread of T6 to provide 5m clearance above the ground levels of the proposal site as detailed at **Appendix 2**. These works are considered to be minor and will not pose a risk to the health or amenity value of this unremarkable tree.

### Tree removals

**4.3** To facilitate development it will be necessary to remove G1, T2 and T3, which are all category C and low quality as shown at **Appendix 4**. The removals could be easily mitigated by replacement planting which could be supplied via planning condition. On balance the removals are considered acceptable.

### Tree protection fencing

**4.4** Tree protection fencing will be required throughout the construction process to restrict construction access within the RPAs of trees T4, T6, T7, T8, T9. The areas to be protected by the tree protection fencing can be seen as blue lines on the accompanying Tree Protection Plan at **Appendix 4**.

**4.5** Tree protection fencing will consist of 1.8m high wire mesh panels placed in rubber blocks. The panels will be securely bolted together to prevent movement and a backstay must be attached to each panel to prevent movement and resist impacts. Un-braced weld mesh panels on unsecured rubber or concrete feet will not be used as these are not resistant to impact and are too easily removed by site operatives.

**4.6** A notice will be attached to the fencing which says ‘Tree Protection Area. Keep Out!’.

### Sensitive surface demolition

**4.7** The existing tarmac surface are to be removed partially within the RPAs of trees T6 and T7. To avoid damaging roots that may be growing under or adjacent to the surfaces, they must be broken sensitively and under the supervision of the appointed arboriculturalist. The surface must be broken up using hand tools and pneumatic devices only. Where practical the subbase will be retained to further minimise the risk of harm to roots.

### Sensitive fence removal

**4.8** The sections of perimeter fence within the RPAs of T6 and T7 will require sensitive removal to avoid harm to roots and rooting area. The posts and associated concrete will be dug around by hand and then extracted using an excavator.

**New boundary fence posts**

**4.9** The new boundary fence will overlap with the RPAs of T6. The localised excavations for the fence posts will pose minimal risk to the health of this tree as long as they are carried sensitively to avoid damaging roots. The excavations must be carried out by hand or compressed air device (Air Spade). If the posts are to be secured using concrete, the holes will be lined with an impermeable membrane such as polythene to prevent leaching of caustic substances into the soil.

**Areas for site compounds, storage and mixing**

**4.10** Site compounds will be located away from trees wherever possible and ideally 2m from any protective barriers. On this occasion it is proposed to utilise the area within the site for the site compound, storage and mixing as shown at **Appendix 4**.

**Services**

**4.11** The proposed layout of incoming (water, gas and electricity) and outgoing (foul sewer) services is not yet established but they should be installed outside root protection areas. If it is necessary for a trench to be dug through an RPA a specific method statement will be required which will need to specify that the trench will be hand dug and that care will be taken to preserve all roots encountered which are larger than 25 mm diameter. There is considered to be adequate room for new services to be constructed without requiring trenches that pass-through RPAs of trees.

**Conclusions**

**4.12** I visited Tottenham Hale Station TfL Site, Cygnet Way, London on the 11th September 2025 and surveyed a total of eight trees and one group in accordance with BS5837: 2012.

**4.13** At the time of my survey trees were considered to be category C or U and low value.

**4.14** All trees were categorised in accordance with British Standard 5837:2012 as shown at **Appendix 1**.

**4.15** The development will require the removal of G1, T2 and T3, which are all category C and low value.

**4.16** Minor crown lifting works will be required to tree T6 to provide adequate clearances for construction access.

**4.17** Sensitive removal of surfacing and fencing will be required within the RPA of T6.

**4.18** A section of the new perimeter fence will be required within the RPA T6 that will require sensitive excavations.

**4.19** The trees to be retained will be protected during development and methods for ensuring their protection have been described.

## 5 Arboricultural Method Statement

### Access facilitation works

**5.1** The agreed pruning works and tree removals will be carried out as preliminary works as detailed at **Appendix 2**. These works will be carried out by suitably qualified arborists to the standards set out in BS3998: 2010 Tree works – recommendations. Heavy machinery must not be used on unprotected ground.

### Pre-commencement

**5.2** Prior to the commencement of development the LPA shall be provided with at least 2 weeks notice prior to the commencement of any demolition or construction activities. The notification shall include visual evidence of temporary barriers and ground protection.

### Protective barriers/fencing

**5.3** All tree protection barriers will be erected in the positions shown in **Appendix 4** and in accordance with the specifications detailed in Figures 2 and 3.

**Figures 2 and 3** – Examples of above-ground stabilizing systems

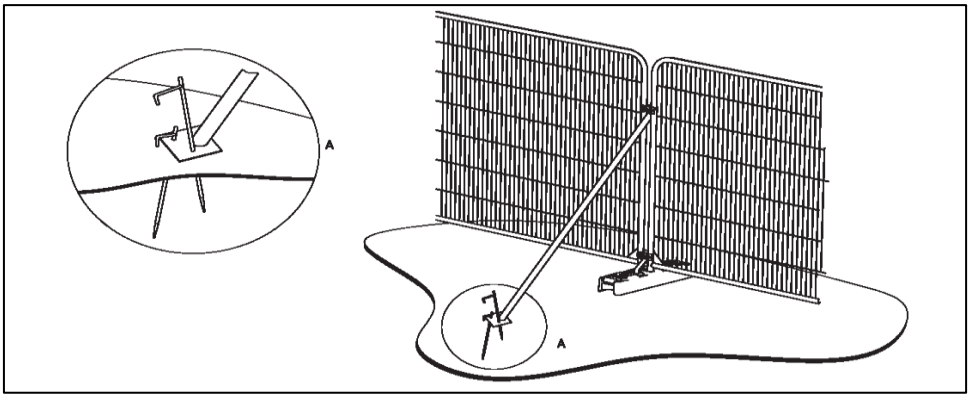


a) Stabilizer strut with base plate secured with ground pins

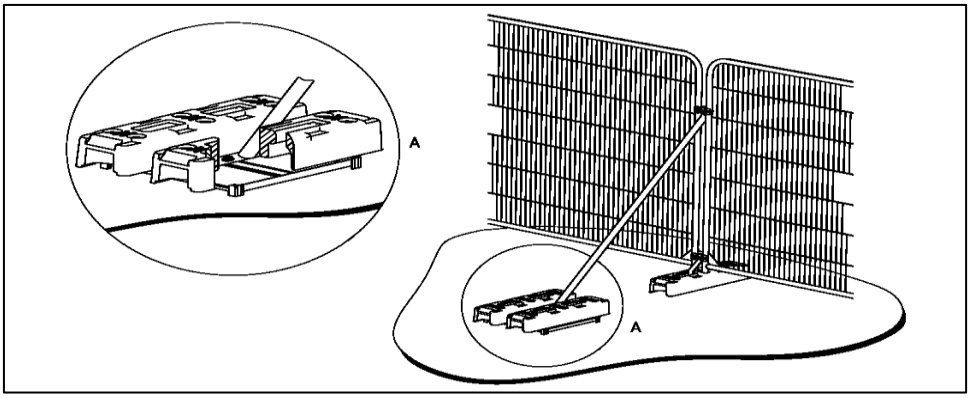


b) Stabilizer strut mounted on block tray

*Image taken from British Standard 5837:2012 – Trees in relation to design, demolition and construction – Recommendations.*

**Warning signs**

**5.4** All weather notices will be attached to the tree protection fencing.

**Figure 4** – Examples of tree protection warning sign




**5.5** Development can commence in accordance with the planning consent.

**Sensitive demolition of surfaces within RPAs**

**5.6** Areas of sensitive demolition are shown as light blue hatching at **Appendix 4**.

**5.7** The existing surface within the RPAs of T6 and T7 will be retained within the RPA until such time as the new surface is to be laid. The surface will be broken using hand tools and pneumatic devices and carefully extracted away from the RPAs. If roots are exposed, they will be covered with damp hessian to protect them from rapid temperature changes. Damage to roots must be avoided, including the outer bark layer.

**5.8** Where the area is to be returned to soft landscaping, a layer of good quality topsoil will be laid over the area.

**5.9** Where the area is to be incorporated into a new access, the subbase will be retained and the new surface laid over the top.

**Sensitive demolition of perimeter fence within RPAs**

**5.10** Areas of the perimeter fence that require sensitive demolition are shown as light blue hatching at **Appendix 4**.

**5.11** The perimeter fence posts within the RPA of T6 will be extracted by excavating around their base (including around any associated concrete). Care will be taken to avoid damaging any roots with a diameter of 25mm or greater. If severance of roots with a diameter of 25mm or greater is unavoidable then this will be carried out using a saw to leave a clean cut.

**Sensitive excavations for fence posts**

**5.12** The section of the proposed perimeter fence to be sensitively installed are shown as purple line at **Appendix 4**.

**5.13** The excavations for fence posts within the RPA of T6 will be carried out using hand tools or compressed air device (Air Spade). If roots of 25mm diameter or greater are uncovered at the proposed post location, then position will be adjusted to avoid it. The holes must be lined with an impermeable membrane if concrete is to be poured.

**5.14** Following completion of all development the tree protection can be dismantled to allow landscaping works to take place.

## Appendix 1 – British Standard 5837:2012 tree categorisation chart

| **TREES UNSUITABLE FOR RETENTION** | | | | |
|---|---|---|---|---|
| CATEGORY AND DEFINITIONS | CRITERIA | | | IDENTIFICATION ON PLAN |
| **Category U**<br><br>Those in such a condition that they cannot realistically be retained as living trees in the context of the current land use for longer than 10 years | • Trees that have a serious, irremediable, structural defect, such that their early loss is expected due to collapse, including those that will become unviable after removal of other category U trees (e.g. where, for whatever reason, the loss of companion shelter cannot be mitigated by pruning).<br>• Trees that are dead or are showing signs of significant, immediate, and irreversible overall decline.<br>• Trees infected with pathogens of significance to the health and/or safety of other trees nearby, or very low quality trees suppressing adjacent trees of better quality.<br><br>*NOTE Category U trees can have existing or potential conservation value which it might be desirable to preserve; see* ***4.5 of BS5837:2012*** | | | RED<br>RGB 127.000.000 |
| **TREES TO BE CONSIDERED FOR RETENTION** | | | | |
| CATEGORY AND DEFINITIONS | CRITERIA - SUBCATEGORIES | | | IDENTIFICATION ON PLAN |
| | 1 Mainly arboricultural values | 2 Mainly landscape values | 3 Mainly cultural values, including conservation | |
| **Category A**<br>**Trees of high quality**<br>with an estimated remaining life expectancy of at least 40 years | Trees that are particularly good examples of their species, especially if rare or unusual; or those that are essential components of groups or formal or semi-formal arboricultural features (e.g. the dominant and/or principal trees within an avenue). | Trees, groups or woodlands of particular visual importance as arboricultural and/or landscape features. | Trees, groups or woodlands of significant conservation, historical, commemorative or other value (e.g. veteran trees or wood-pasture) | LIGHT GREEN<br>RGB<br>000.255.000 |
| **Category B**<br>**Trees of moderate quality**<br>with an estimated remaining life expectancy of at least 20 years | Trees that might be included in category A, but are downgraded because of impaired condition (e.g. presence of significant though remediable defects, including unsympathetic past management and storm damage), such that they are unlikely to be suitable for retention for beyond 40 years; or trees lacking the special quality necessary to merit the category A designation. | Trees present in numbers, usually growing as groups or woodlands, such that they attract a higher collective rating than they might as individuals; or trees occurring as collectives but situated so as to make little visual contribution to the wider locality. | Trees with material conservation or other cultural value | MID BLUE<br>RGB<br>000.000.255 |
| **Category C**<br>**Trees of low quality**<br>with an estimated remaining life expectancy of at least 10 years, or young trees with a stem diameter below 150 mm | Unremarkable trees of very limited merit or such impaired condition that they do not qualify in higher categories. | Trees present in groups or woodlands, but without this conferring on them significantly greater collective landscape value; and/or trees offering low or only temporary/transient landscape benefits. | Trees with no material conservation or other cultural value. | GREY<br>RGB<br>091.091.091 |

## Appendix 2 - Tree survey schedule

**agl:above ground level – c:circa – gl:ground level**

| Tree No. | Species | Height (m) | Trunk dia. at 1.5m | Canopy Spread | Crown Height (m) | Age Class | Physiological Condition | Structural Condition | Comments/ Recommendations | Useful Life Expect | BS5837 grade | Root Protection Area | |
|---|---|---|---|---|---|---|---|---|---|---|---|---|---|
| | | | | | | | | | | | | Radius | RPA Area |
| G1 | Group of Sycamore *C*ommon Hornbeam | 11m | Max 210mm | N4m E5m S5m W4m | 3m | Young | Good | Good | Unremarkable group.<br><br>**Works required for development:** Remove group. | 10+ | C | 2.5m | 20.0m² |
| T2 | Sycamore *(Acer pseudoplatanus)* | 6m | 111mm | N2m E3m S3m W2.5m | 3m | Young | Good | Good | Unremarkable tree.<br><br>**Works required for development:** Remove tree. | 10+ | C | 1.3m | 5.6m² |
| T3 | Sycamore *(Acer pseudoplatanus)* | 9m | 196mm | N3.5m E4m S2m W2m | 2.5m | Young | Good | Good | Unremarkable tree.<br><br>**Works required for development:** Remove tree. | 10+ | C | 2.4m | 17.4m² |
| T4 | Sycamore *(Acer pseudoplatanus)* | 9m | 307mm | N3.5m NE3m E3.5m S5.5m W4m NW4m | 3m | Semi mature | Good | Good | Unremarkable tree. | 10+ | C | 3.7m | 42.6m² |
| T5 | Common Elder *(Sambucas nigra)* | 7m | 300mm est | N4.5m E2m S1m W2m | 2m | Mature | Good | Fair | Ivy impedes survey. Multiple stems with some topped. Stem measurement taken from remaining stem. | <10 | U | 3.6m | 40.7m² |

| Tree No. | Species | Height (m) | Trunk dia. at 1.5m | Canopy Spread | Crown Height (m) | Age Class | Physiological Condition | Structural Condition | Comments/ Recommendations | Useful Life Expect | BS5837 grade | Root Protection Area | |
|---|---|---|---|---|---|---|---|---|---|---|---|---|---|
| | | | | | | | | | | | | Radius | RPA Area |
| T6 | Sycamore *(Acer pseudoplatanus)* | 11m | 277mm | N4.5m E4m S3m W6m | 3m | Semi mature | Good | Good | Unremarkable tree.<br><br>**Works required for development:**<br>Crown lift eastern lateral spread overhanging the compound to provide a clearance of 5m above ground level. | 10+ | C | 3.3m | 34.7m² |
| T7 | Common Hornbeam *(Carpinus betulus)* | 8m | 235mm | N1.5m E3.5m S4m W4.5m | 3m | Young | Good | Good | Unremarkable tree. | 10+ | C | 2.8m | 25.0m² |
| T8 | Smoke tree *(Cotinus coggygria)* | 5m | 175mm est | N2m E2m S3m W2m | 2m | Semi mature | Good | Fair | Unremarkable tree.<br>Lower southern limbs have been pruned away from car park. | 10+ | C | 2.1m | 13.9m² |
| T9 | Cherry sp. *(Prunus sp.)* | 9m | 266mm | N3m E3m S3m W3m | 3m | Semi mature | Fair | Good | Unremarkable tree.<br>Fair vitality demonstrated by less than normal foliage density.<br>Bark wound on eastern surface root. | 10+ | C | 3.2m | 32.0m² |

## Appendix 3 – Tree Constraints Plan – RMT1162 – TCP – REV C

**Tree constraints plan (TCP) showing retained trees, tree numbers, root protection areas (magenta circles/polygons) and canopy spreads (green lines). The plan has been provided separately as a PDF at a scale of 1: 200 @ A2.**

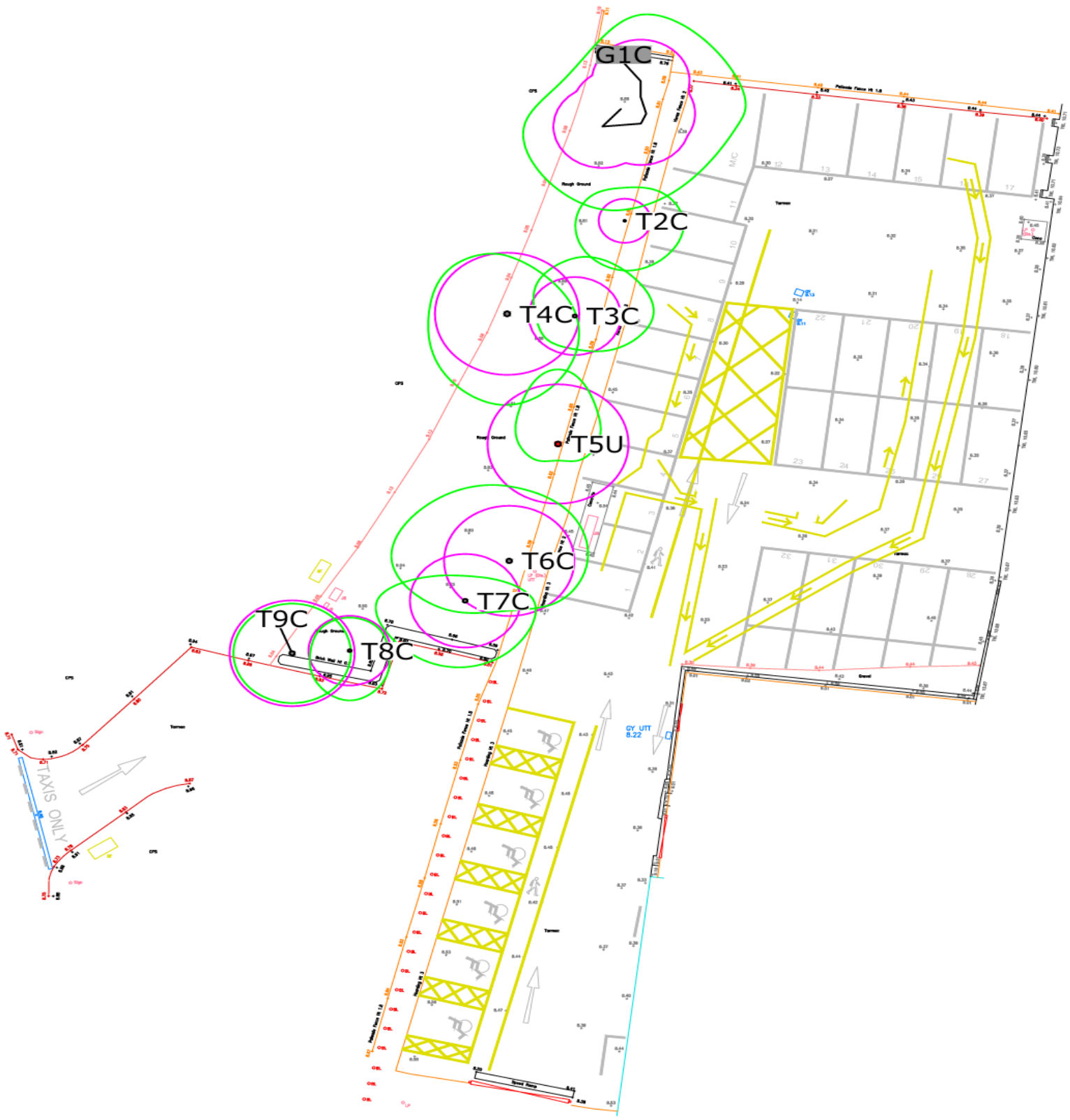


| 0 | 5 | 10 |
|---|---|---|

| Root Protection Area | Canopy Spread | | |
|---|---|---|---|
| | | | |

**RMTTree Consultancy Ltd**

36 Chetwode Place, Aldershot, Hants, GU12 4BS
Email: rmttreeconsultancy@gmail.com
Tel: 07921313967

**Tree Constraints Plan**

| Scale: 1:200 @ A2 | Date: August 2026 | N |
|---|---|---|
| Drawing reference: Appendix 3 - RMT1162 - TCP - REV C | | |

© Crown Copyright and database rights from date shown above
Ordnance Survey © licence number 100023148

## Appendix 4 – Tree Protection Plan – RMT1162 – TPP – REV C

**Tree protection plan (TPP) showing retained trees, tree numbers, root protection areas (magenta circles/polygons), canopy spreads (green lines) and tree removals (red lines). The location of protective fencing is shown as blue lines, sensitive demolition as light blue hatching and sensitive excavation as purple lines. The plan has been provided separately as a PDF at a scale of 1: 200 @ A2.**

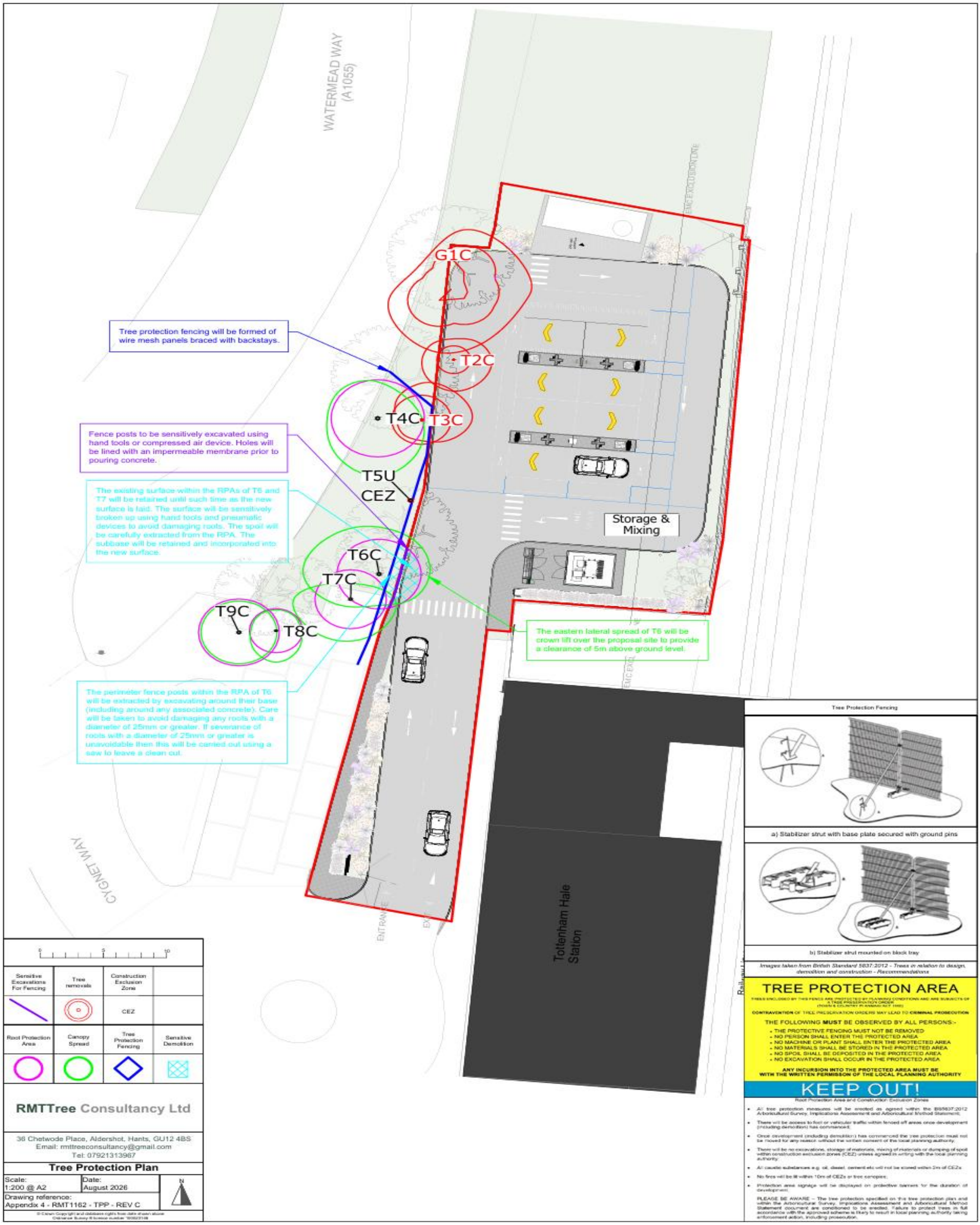

## Appendix 5 – Arboricultural site supervision schedule

| Activity | Supervision Required |
|---|---|
| Prior to the commencement of development the LPA shall be provided with at least 2 weeks notice prior to the commencement of any demolition or construction activities. The notification shall include visual evidence of temporary barriers and ground protection. | ✓ |
| At any time that there are conflict issues with the agreed tree protection. | ✓ |

Following every visit the appointed arboriculturalist will fill out the site monitoring form which is shown at **Appendix 6** and this will be forwarded to the LPA.

## Appendix 6 – Site monitoring form

| RMTTree Consultancy Ltd | | | |
|---|---|---|---|
| **Site monitoring form** | | | |
| **Date of visit** | | **Site** | |
| **Consultant in attendance** | | | |
| **Observations/status of tree protection/comments:** | | | |
| | | | |
| **Recommendations (if necessary):** | | | |
| | | | |
| **Date of next visit** | | **Signature** | |

## Appendix 7 – Qualifications and experience

Robert Toll has been working with trees since 2004 when he completed his studies.

In 2000 he began his studies at Riseholme College, Lincoln where achieved a pass with merit in Forestry at National Diploma level. In 2002 he attended Moulton College in Northampton where he gained a Level Five Higher National Diploma in Urban Forestry with merit.

In 2004 Robert began work as a temporary tree inspector at Northampton Borough Council, undertaking inspections of trees in response to enquiries from the public. After 4 months Robert took up a permanent tree inspector role at Coventry City Council which predominantly involved undertaking safety inspections of trees on school sites.

In 2006 Robert moved to Warwick District Council to take up a temporary post of Tree Protection Officer which involved reviewing old area tree preservation orders and identifying those trees which were considered worthy of protection under new specific orders. He also streamlined the council procedure for making new tree preservations orders, cutting the time from making to serving from up to 2 weeks to within 2 hours.

In 2008 Robert moved to Hart District Council, Hampshire to take up the role of Tree Officer within the planning department. This role included determining works trees applications, commenting on planning proposals, liaising with the public and providing arboricultural advice to other departments within the Council.

Between 2014 and 2016 Robert took up the role of Tree Officer at Elmbridge Borough Council, Surrey, once again carrying out tasks such as determining works trees applications, commenting on planning proposals and liaising with the public. While at Elmbridge Borough Council he passed the Arboricultural Association's Professional Tree Inspection course.

Robert is a professional member of the Arboricultural Association.