NOTE:
REACTIONS SHOWN ARE ULTIMATE AND TO BE USED FOR CONNECTION TO EXISTING COLUMN / BEAM.

KEY:

EX B DENOTES EXISTING BEAM

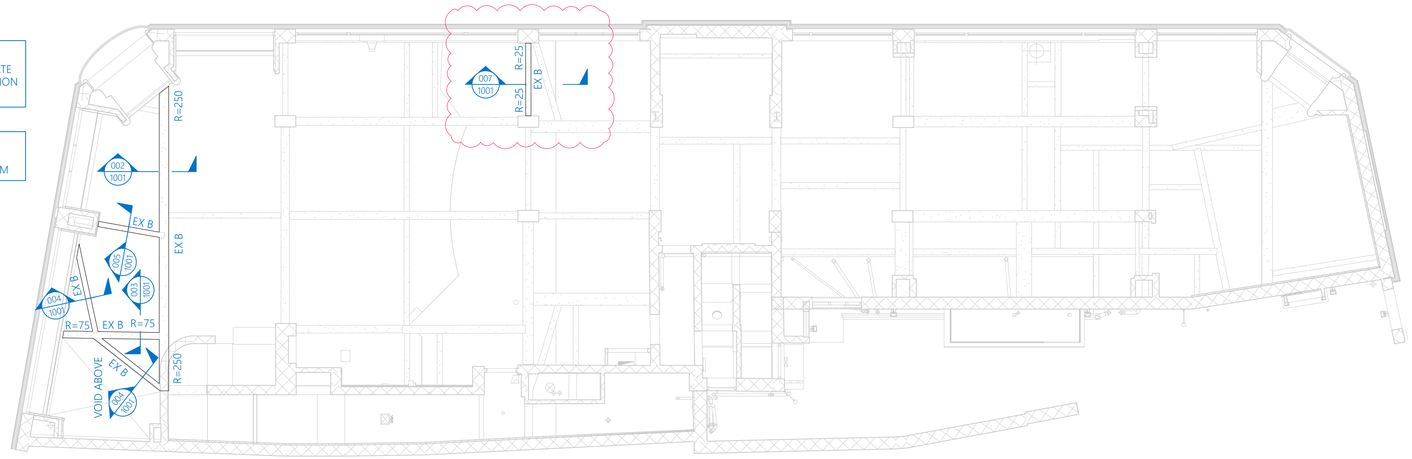

N

0 1M 2M 4M

1:100

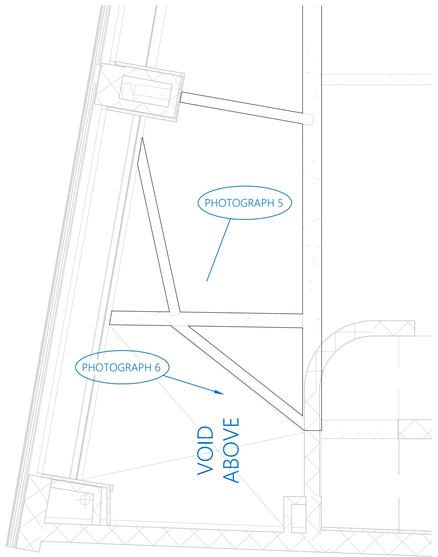

PHOTOGRAPH KEY
1:50



PHOTOGRAPH 5
VIEW OF LIFT



PHOTOGRAPH 6
VIEW OF LIFT

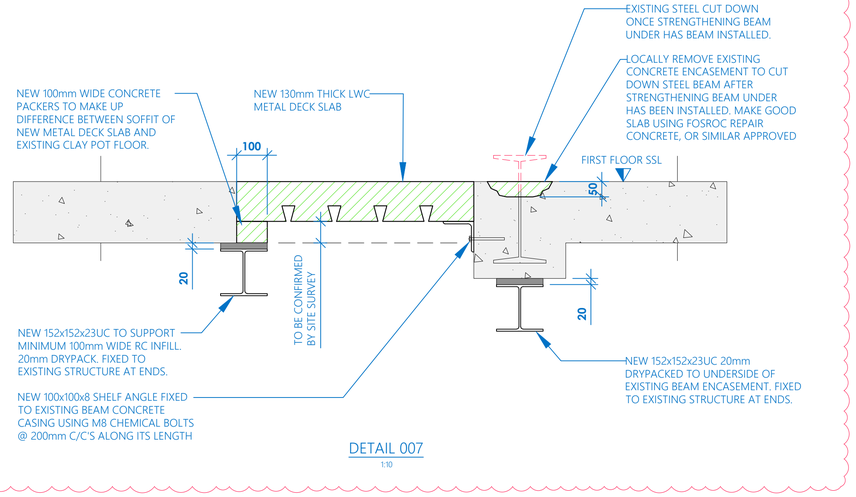

DETAIL 007
1:10

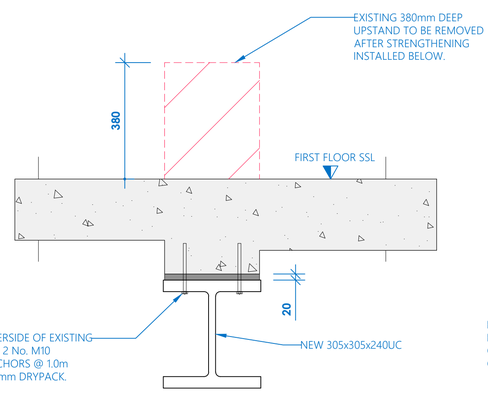

DETAIL 002
1:10

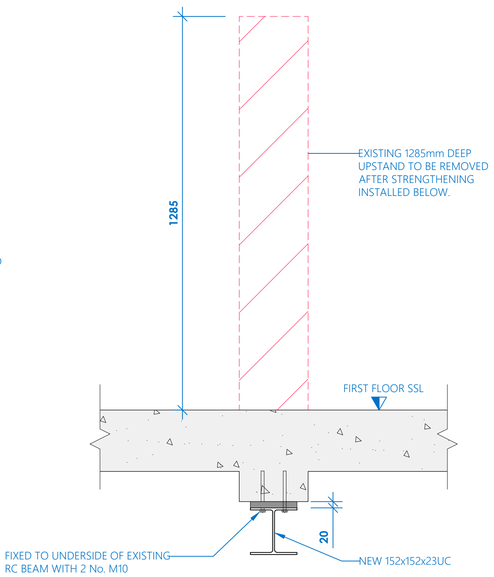

DETAIL 003
1:10

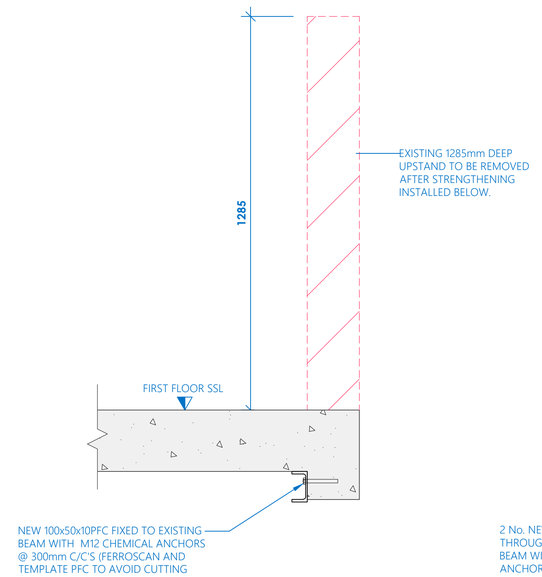

DETAIL 004
1:10

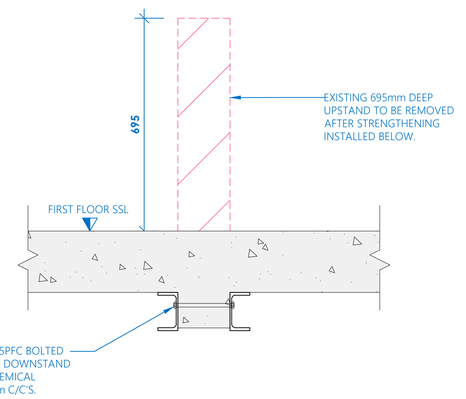

DETAIL 005
1:10

P02	10/09/2026	RIBA Stage 3 Issue - Revised as Clouded	S.K.
P01	25/08/2026	RIBA Stage 3 Issue	S.K.
Status	Date	Description	By

Copyright

MOSAIC
CIVIL & STRUCTURAL ENGINEERS
76 beckenham road | london | br3 4rh

Client
PPR ESTATES

Project
8 THE BROADWAY, CROUCH END - LONDON

Title
EXISTING GROUND FLOOR REFLECTIVE CEILING PLAN SHOWING STRUCTURAL MODIFICATIONS

Status
RIBA STAGE 3

Designed By J.P.	Checked By A.B.	Mosaic Ref. 25125	
Drawn By S.K.	Date AUG 26	Scales 1:100 @ A1 U.N.O.	

Project Ref. - Originator - Volume - Level - Type - Role - Drawing Number	Revision
25125-MOS-XX-00-DR-S-1001	P02