INFORMATION CONTAINED IN THIS DRAWNG IS THE SOLE COPYRIGHT OF DLA ARCHITECTURE LTD AND IS NOT TO BE REPRODUCED WITHOUT PERMISSION

DO NOT SCALE, REFER TO FIGURED DIMENSIONS ONLY

REVISIONS

P01	Planning Application Issue	28/08/2026
P02	Addendum to the planning submission	10/11/2026



BAY STUDY 05 - ELEVATION

1 : 20

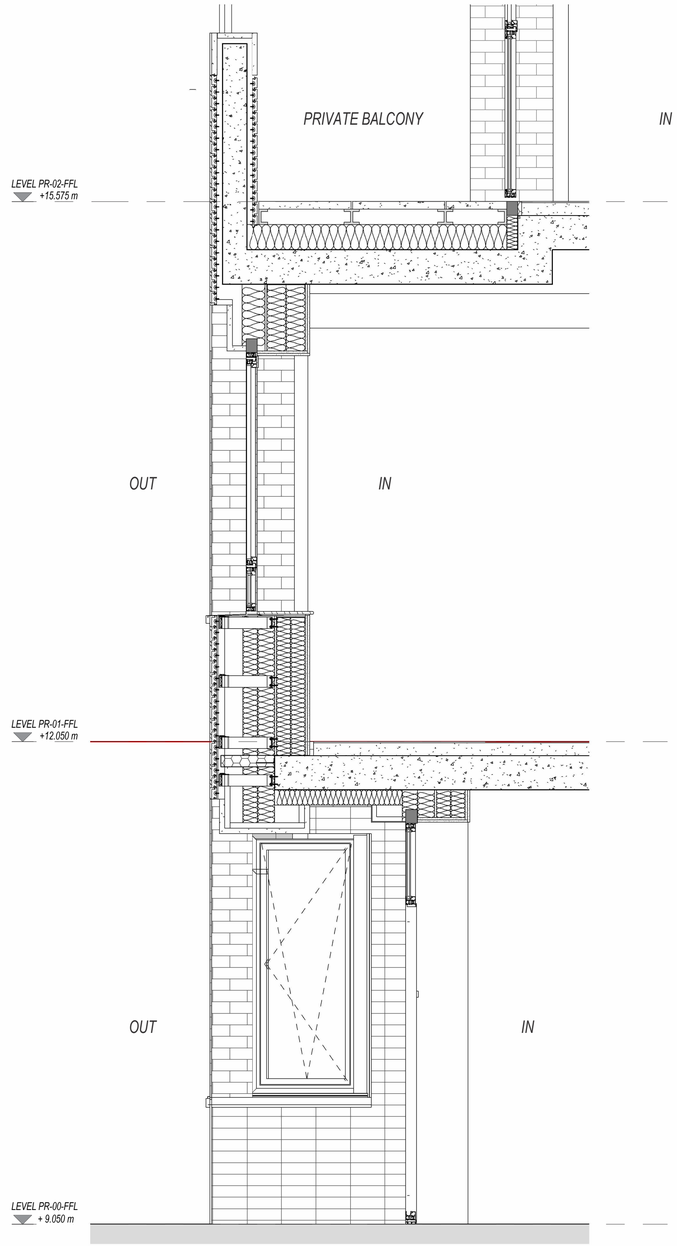

BAY STUDY 05 - SECTION

1 : 20

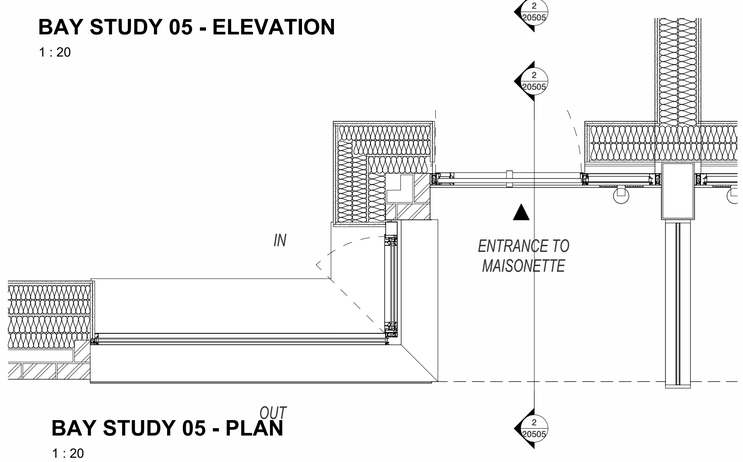

BAY STUDY 05 - PLAN

1 : 20

SCALE 1:20 — 0 0.2 0.4 1 2 m

SOCIAL RENTED:	
B1	*Brickwork - Dark Grey*
B2	*Brickwork - Light Grey*
B3	*Brickwork - Light Grey - Recessed Stacked (Vertical)*
B4	*PPC Aluminium - Light Grey*
B5	*PPC Aluminium - Green RAL 6019*
B6	*PPC Aluminium - Currogated Profile- Perforated - Green RAL 6019*
B7	*PPC Aluminium - Off White*
B8	*Concrete-style Material - Light Grey Tone -Piers, Lintels, and Banding*
B9	*Concrete-style Material - Dark Grey tone -Piers, Lintels, and Banding*



dla

6 East Parade Leeds LS1 2AD
0113 887 3100
www.dla-architecture.co.uk

PROJECT
Ashley House Tottenham Hale

TITLE
BAY STUDY 05 - INDICATIVE AFFORDABLE BUILDING

SCALE	DATE
As indicated @ A1	10/11/2026

DLA REF	DRAWN	REVIEWED
2025-032	TS	CJ

DOCUMENT NUMBER
AHCF-DLA-Z2-ZZ-DR-A- **20505**

DOCUMENT PURPOSE	REVISION
PLANNING	**P02**