BEDDING NOTES

1. GRANULAR PIPE BEDDING MATERIAL FOR PIPES, AND BACKFILLING FOR TEMPORARY DRAINS (TRENCH SUB-DRAINS), SHALL CONSIST OF AGGREGATES FROM NATURAL SOURCES OR SINTERED PULVERIZED-FUEL ASH COMPLYING WITH THE RELEVANT PROVISIONS OF BS.882 AND BS.3797, PART 2 RESPECTIVELY, SIZED IN ACCORDANCE WITH THE FOLLOWING TABLE:

NOMINAL BORE	ALTERNATIVE AGGREGATE SIZES (mm)	
	SINGLE-SIZED	GRADED
100	10	-
150	10 OR 14	14 TO 5
225 - 300	10, 14 OR 20	14 TO 5 OR 20 TO 5
375 - 525	14 OR 20	14 TO 5 OR 20 TO 5
EXCEEDING	14, 20 OR 40	14 TO 5, 20 TO 5 OR 40 TO 5

2. SELECTED BACKFILL MATERIAL, WHETHER SELECTED FROM LOCALLY EXCAVATED MATERIAL OR IMPORTED, SHALL CONSIST OF UNIFORM, READILY COMPACTIBLE MATERIAL, FREE FROM VEGETABLE MATTER, BUILDING RUBBISH & FROZEN MATERIAL, OR MATERIALS SUSCEPTIBLE TO SPONTANEOUS COMBUSTION, & EXCLUDING CLAY OF LIQUID LIMIT GREATER THAN 80 AND/OR PLASTIC LIMIT GREATER THAN 55 AND MATERIALS OF EXCESSIVELY HIGH MOISTURE CONTENT. CLAY LUMPS AND STONES SHALL BE RETAINED ON 75mm AND 37.5mm SIEVES RESPECTIVELY.

3. COMPRESSIBLE FILLER FOR INTERRUPTING CONCRETE PROTECTION TO PIPELINES SHALL CONSIST OF BITUMEN IMPREGNATED INSULATING BOARD TO BS 1142, PART 3 OR OTHER EQUALLY COMPRESSIBLE MATERIAL. THE THICKNESS OF COMPRESSIBLE FILLER SHALL BE AS FOLLOWS:

NOMINAL BORE OF PIPE (mm)	THICKNESS OF COMPRESSIBLE FILLER (mm)
LESS THAN 450	18
450 - 1200	36
EXCEEDING 1200	54

4. THE CONTRACTOR IS TO PROTECT BURIED PIPES (PARTICULARLY SHALLOW PIPES) FROM DAMAGE CAUSED BY LOADS IMPOSED BY CONSTRUCTION PLANT.

5. BELOW ROADS AND OTHER PAVED AREAS TRENCHES SHALL BE BACKFILLED WITH DIT SPECIFICATION TYPE 1 SUB-BASE MATERIAL UP TO ROAD/PAVING FORMATION LEVEL. ALL OTHER TRENCHES,UNLESS OTHERWISE SPECIFIED SHALL BE BACKFILLED TO FINISHED GROUND LEVEL OR UNDERSIDE OF TOPSOIL LAYER WITH WELL COMPACTED EXCAVATED MATERIAL.

GRANULAR BEDDINGS

1. DIMENSION Y: 1/6 BC OR 100mm UNDER BARRELS, AND 50mm MIN. UNDER SOCKETS WHICHEVER IS THE GREATER (400 MAX.). ROCK ETC 1/4 BC AND 150mm MIN UNDER SOCKETS (400mm MAX.)

2. DN : NOMINAL BORE OF PIPE

3. BC : EXTERNAL DIAMETER OF PIPE BARREL

CONCRETE BEDDINGS

1. THE USE OF GRANULAR BEDDINGS BELOW CONCRETE BEDDINGS (BEDDING TYPES A2,A4,A6) ARE FOR USE IN WET CONDITIONS.
2. CONCRETE CRADLES MAY EXTEND TO SIDES OF TRENCH.
3. TRANSVERSE STEEL TO BE 0.4% MIN OF CONCRETE AT X-X (FM=3.4) UNLESS OTHERWISE STATED.
4. BEDDING BENEATH & AT SIDES OF PIPE TO BE WELL COMPACTED
5. BEDDING/BACKFILL DIRECTLY ABOVE PIPE TO BE LIGHTLY COMPACTED BY HAND. DIMENSION Y: 1/6BC OR 100mm UNDER BARRELS, AND 50mm UNDER SOCKETS WHICHEVER IS GREATER (SUBJECT TO 400mm MAX.).
6. DN = NOMINAL BORE OF PIPE.
7. BC = EXTERNAL DIAMETER OF PIPE BARREL.

TRENCH WIDTH

1. THE MAXIMUM TRENCH WIDTHS ARE TO BE AS SHOWN BELOW UNLESS THE APPROVAL OF THE ENGINEER IS OBTAINED.

INTERNAL PIPE DIAMETER	MAXIMUM TRENCH WIDTH
100	600
150	600
225	700
300	850
375	1050
450	1150
525	1200
600	1350
675	1450
750	1500
825	1600
900	1900
975	2000
1050	2100
1200	2300

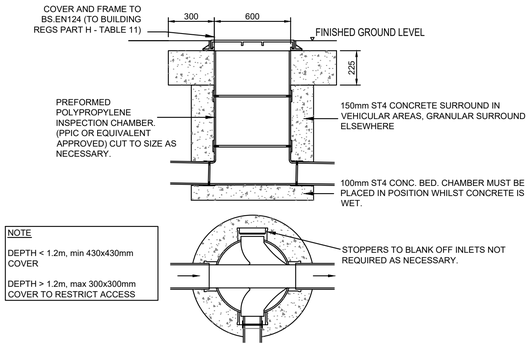

POLYPROPYLENE INSPECTION CHAMBER

MAX DEPTH
1.2m 1:20

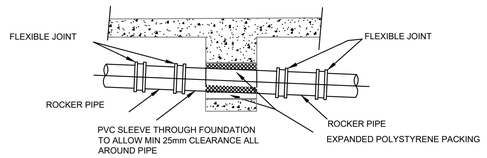

PIPE PASSING THROUGH FOUNDATIONS

1:20

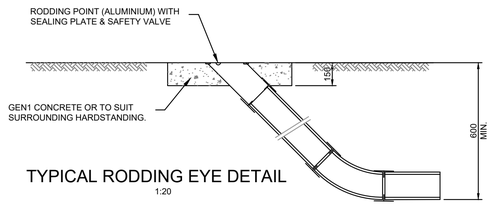

TYPICAL RODDING EYE DETAIL

1:20

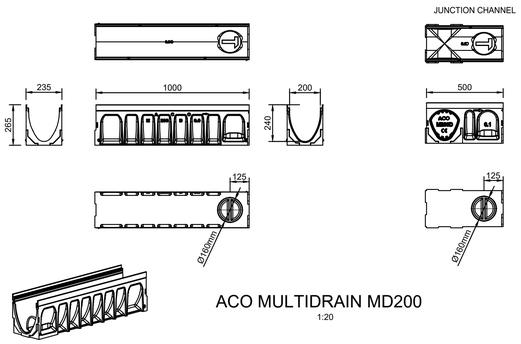

ACO MULTIDRAIN MD200

1:20

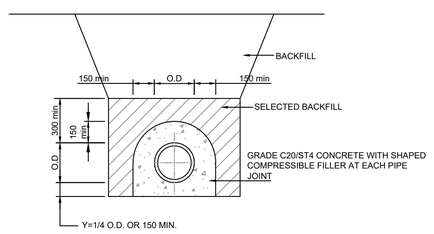

BED CLASS Z

PLAIN CONCRETE SURROUND
1:20

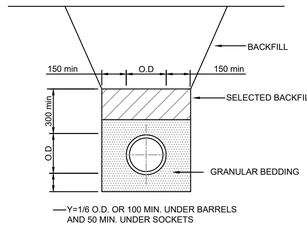

BED CLASS S

GRANULAR BED AND SURROUND
1:20

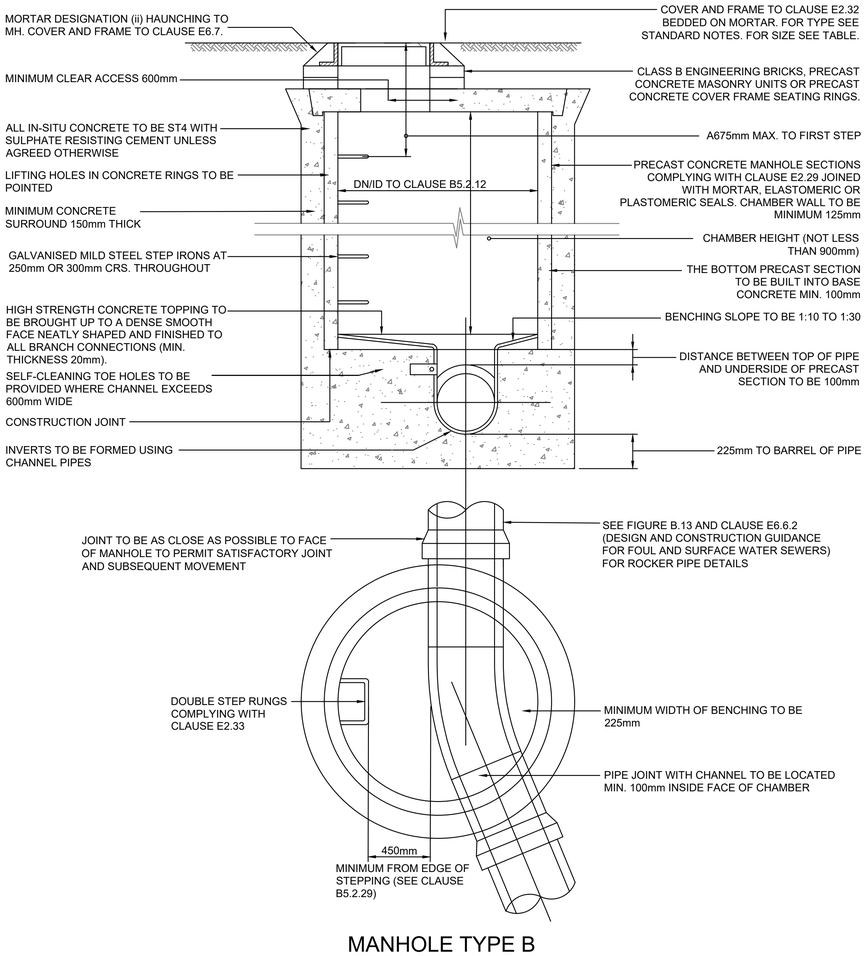

MANHOLE TYPE B

DEPTH FROM GROUND TO SOFFIT 3m
1:25

GENERAL NOTES

1. THIS DRAWING SHOULD NOT BE PRODUCED IN WHOLE OR PART WITHOUT THE WRITTEN CONSENT OF LINK ENGINEERING.
2. DO NOT SCALE FROM THIS DRAWING. UNITS ARE IN METRES UNLESS NOTED OTHERWISE.
3. THE CONTRACTOR IS TO CHECK ALL INFORMATION PROVIDED PRIOR TO COMMENCING WORKS AND SEEK CLARIFICATION FROM THE ENGINEER IN RESPECT TO ANY AMBIGUITIES FOUND.
4. ANY DISCREPANCIES NOTED ON SITE ARE TO BE REPORTED TO THE ENGINEER IMMEDIATELY.
5. THIS DRAWING SHOULD BE READ IN CONJUNCTION WITH ALL OTHER SCHEME SPECIFIC DRAWINGS & SPECIFICATIONS.
6. BACKGROUND PLAN BASED ON TOPOGRAPHIC SURVEY DATA CREATED BY OTHERS AND SUPPLIED FOR THE PURPOSE OF CARRYING OUR ENGINEERING WORKS. WE CANNOT BE HELD RESPONSIBLE FOR THE CONTENT, COMPLETENESS AND ACCURACY PROVIDED TO US BY OTHERS. THE CONTRACTOR SHALL CHECK ALL DIMENSIONS AND LEVELS ON SITE.
7. ALL DRAINAGE WORKS SHALL BE CONSTRUCTED IN ACCORDANCE WITH BUILDING REGULATION'S PART H AND / OR THE LATEST SEWERAGE SECTOR GUIDANCE APPENDIX C DESIGN AND CONSTRUCTION GUIDANCE.
8. ALL PROPOSED CONNECTIONS TO EXISTING PUBLIC SEWERS WILL BE SUBJECT TO A S106 APPLICATION. THE APPLICATION IS REQUIRED TO BE SUBMITTED BY THE APPOINTED CONTRACTOR.
9. PRIOR TO CONSTRUCTION THE EXISTING OUTFALL LOCATIONS ARE TO BE CONFIRMED AND VERIFIED.
10. THE RUNOFF RATES HAVE BEEN CULCULATED IN ACCORDANCE WITH ENVIRONMENT AGENCY'S (EA) RAINFALL RUNOFF MANAGEMENT FOR DEVELOPMENTS REPORT - SC030219.
11. THE CLIMATE CHANGE ALLOWANCES FOR THE 3.3% AND 1% AEP ARE IN ACCORDANCE WITH EA'S GUIDANCE "FLOOD RISK ASSESSMENTS: CLIMATE CHANGE ALLOWANCES".
12. THE ATTENUATION STORAGE HAS BEEN DESIGNED TO ACCOMMODATE UP TO AND INCLUDING THE 1 IN 100 YEAR RETURN PERIOD INCLUDING CLIMATE CHANGE ALLOWANCE AS PER THE EA GUIDANCE.
13. ALL INVERT & COVER LEVELS ARE SUBJECT TO FURTHER DETAIL DESIGN AS THE SITE LAYOUT DEVELOPS.
14. THIS INFORMATION IS PROVIDED TO SUPPORT AN OUTLINE PLANNING APPLICATION.
15. FURTHER DETAILED DESIGN AND CONSIDERATION OF THE DRAINAGE IS TO BE PROVIDED AS PART OF FURTHER RESERVED MATTERS APPLICATIONS BASED ON DEVELOPED PARCEL LAYOUTS. THE INFORMAITON ON THIS DRAWING SHOWS THE KEY PRINCPALS OF THE DRAINAGE PROPOSALS DEMOSTRATING THAT A SUITABLE SCHEME CAN BE PROVIDED WITHIN THE DEVELOPMENT SITE.
17. ALL EXISTING DRAINAGE OUTFALLS ARE TO BE PROVED BY APPROPRIATE SURVEY AND CCTV SYSTEM AS REQUIRED TO ESTABLISH CONNECTION AND CONDITION. ANY REQUIRED REMEDIAL WORKS WITHIN THE SITE AREA SHALL BE UNDERTAKEN AS PART OF THE WORKS.
18. APPROPRIATE DISCHARGE CONSENTS ARE TO BE PROVIDED FOR ALL CONNECTIONS TO THE EXISTING DRAINAGE SYSTEMS.
19. CONSIDERATION WITHIN THE DESIGN IS TO BE GIVEN TO ACCESS FOR MAINTENANCE OF SUDS FEATURES INCLUDING LAY-BYS AND ACCESS TRACK TO PONDS AND CONTROL DEVICES.

Rev.	Amendments	Date	By
P0	INITIAL ISSUE.	20.10.26	MSB

Revisions

Client: Goodman

Link ENGINEERING
Find us @ www.linkeng.co.uk

Project
LP801 - TOTTENHAM COMMERCIAL PARK, BLOCK H

Drawing
PROPOSED DRAINAGE DETAILS

Scale @ A1	Drawn	Checked	Rev
AS SHOWN	MSB	SC	P0

Status: PLANNING (S5)

Drawing No: TCP-LINK-XX-XX-DR-C-0501