Check dimensions on site and report discrepancies to the Surveyor. Copyright protected.

Ideal 4000K half surface offset

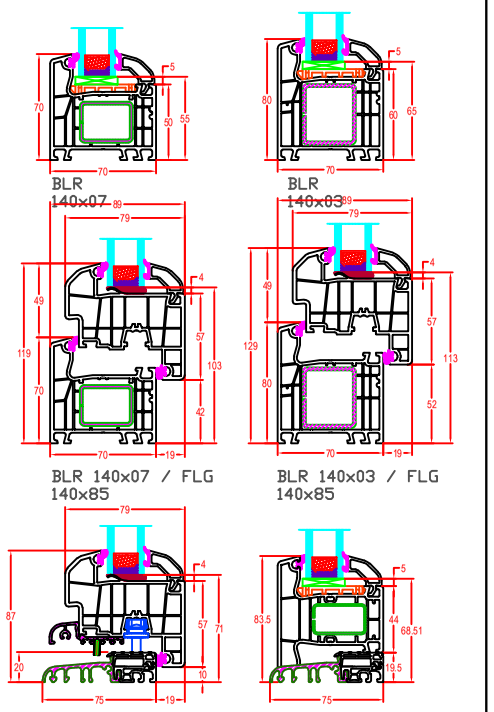

Ideal 4000K half surface offset

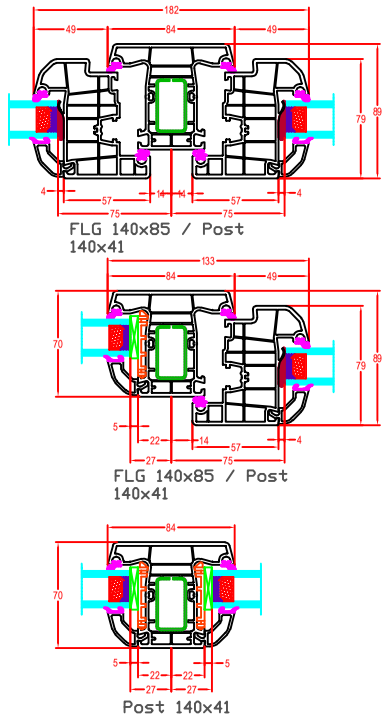

Ideal 4000K half surface post

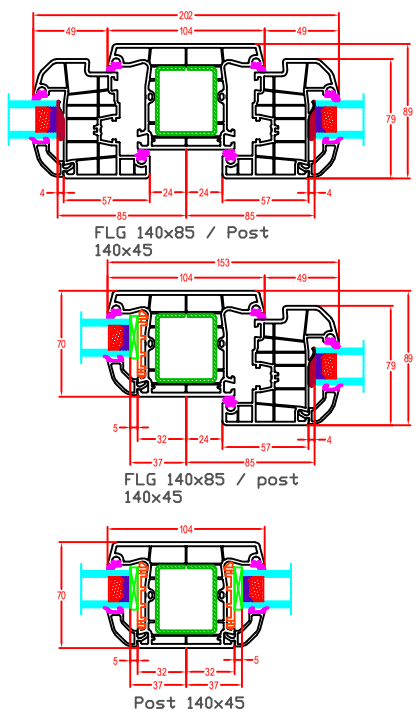

Ideal 4000K half surface post

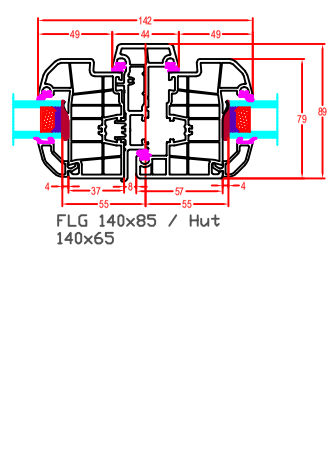

Ideal 4000K half surface post

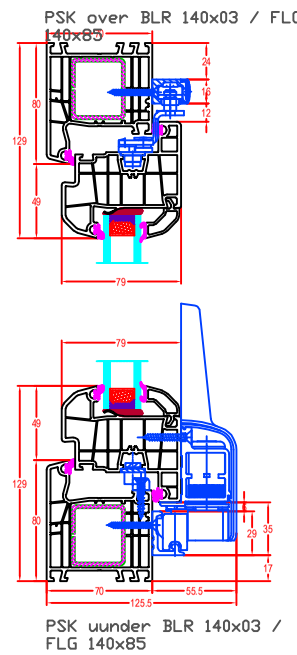

Tugby & Tugby Surveyors Limited
30 Marks Avenue
Ongar, Essex CM5 9AY
Telephone: 01277 364145

PVC window
Frame Details

Ella Margolin
25 Oxford Road
London
N4 3HA

Scale: A3 @ 1:5
Date: November 2026
Drawing Number:17326/20D
Revision Letter:
Drawn by: Hayley Simpson
Checked by: Fraser Tugby