NOTES:

SUBJECT TO STATUTORY CONSENTS

BASED ON OS MAP REPRODUCED BY PERMISSION OF CONTROLLER OF HM STATIONARY OFFICE (c) CROWN COPYRIGHT

COPYRIGHT RESERVED

DO NOT SCALE THIS DRAWING

DO NOT USE ELECTRONIC VERSIONS OF THIS DRAWING TO DETERMINE DIMENSIONS UNLESS SPECIFICALLY AUTHORISED BY MICHAEL SPARKS ASSOCIATES

IF USING AN ELECTRONIC VERSION OF THIS DRAWING FIGURED DIMENSIONS TAKE PRECEDENCE AND NOTIFY MICHAEL SPARKS ASSOCIATES OF ANY DISCREPANCIES

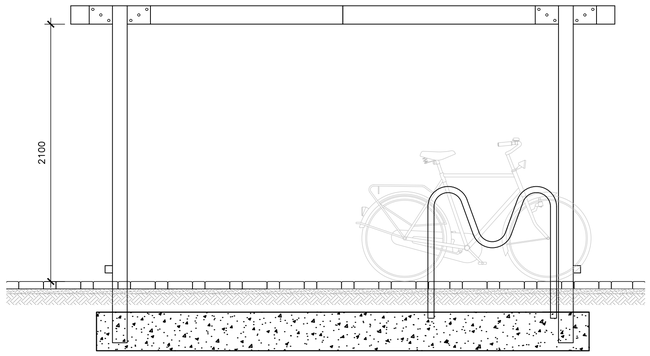

01 / 215 LARGE BICYCLE SHELTER SIDE ELEVATION

1:25

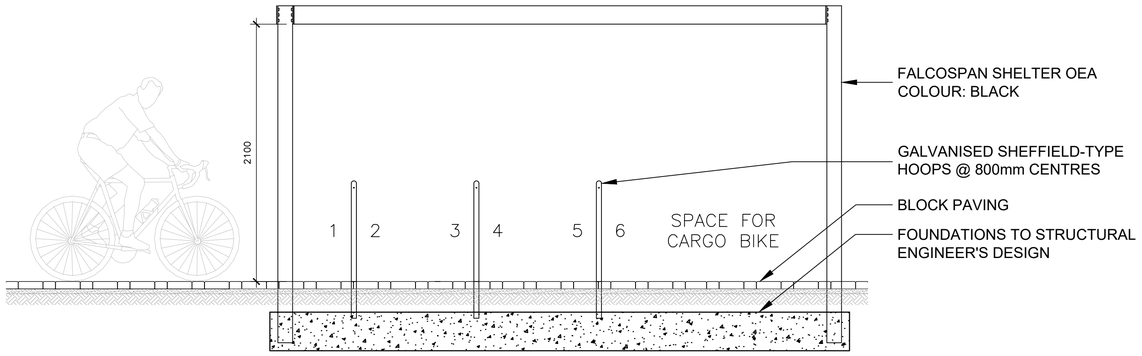

02 / 215 LARGE BICYCLE SHELTER FRONT ELEVATION

1:25

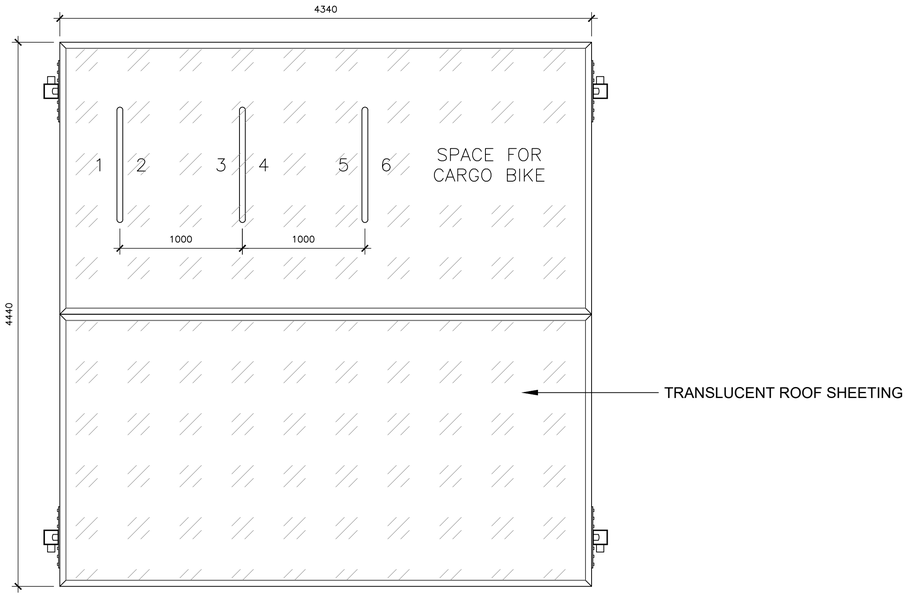

03 / 215 LARGE BICYCLE SHELTER PLAN

1:25

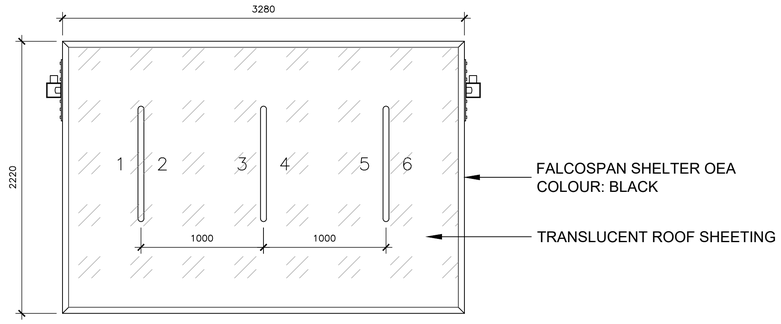

04 / 215 STANDARD BICYCLE SHELTER PLAN

1:25

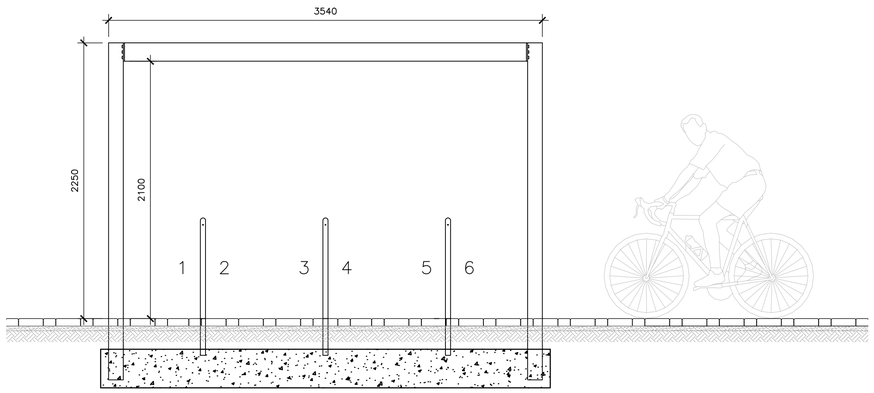

05 / 215 STANDARD BICYCLE SHELTER FRONT ELEVATION

1:25

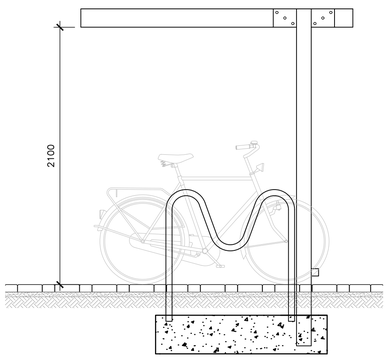

06 / 215 STANDARD BICYCLE SHELTER SIDE ELEVATION

1:25

0 0.5 1 2.5m

REV	DATE	NOTE	DRAW	CHCK
–	23-11-23	ISSUED FOR APPROVAL.	MK	SD

MICHAEL SPARKS ASSOCIATES

CHARTERED ARCHITECTS

11 PLATO PLACE
ST.DIONIS ROAD
LONDON SW6 4TU

TELEPHONE 020 7736 6162
www.msa-architects.co.uk

GRAFTONGATE

TITLE
DYSON'S ROAD, EDMONTON

DRAWING
BICYCLE SHELTER DETAILS

CLIENT
GRAFTONGATE DEVELOPMENTS

DATE	SCALE	DRAWN
NOV 2023	1:25@A1	MK
	STATUS	CHECKED
	PLANNING	SD

DRAWING NUMBER
31380-PL-215