LOCATION PLAN

1:1250 @ A4

N

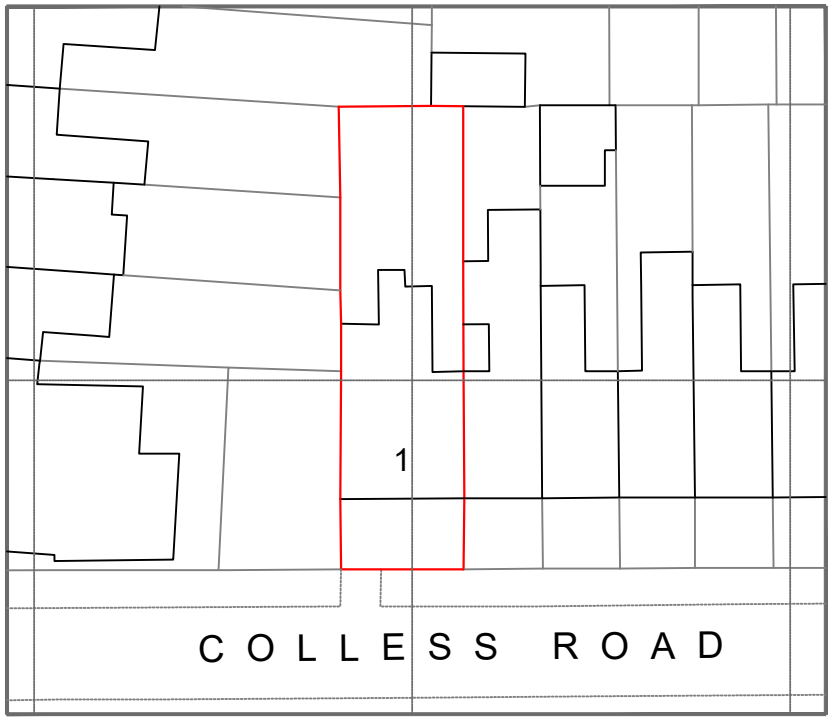

0 10 20

metres

© Crown copyright 2022 Ordnance Survey 100053143

BLOCK PLAN

1:500 @ A4

N

Redwoods. PLANNING & DESIGNING

Address - Unit 4, Grosvenor Way, London E5 9ND
Phone - 020 3781 8008
E-mail - office@redwoodsprojects.co.uk
Web - www.redwoodsprojects.co.uk

Any errors on Dimensions to be reported to the Architect prior to commencement of Works.
Dimensions and areas are based on survey information.
This drawing is copyright © Redwoods Projects.
All dimensions to be checked on site Prior work.

REFERENCE:	1 COLLESS ROAD, LONDON N15 4NR, UK
TITLE:	EXISTING DRAWINGS LOCATION & BLOCK PLAN
PROJECT No	2039
DATE:	14-12-2023
SHEET No	E 00

0 1 2 2.5m

scale
1:100 @A4

NOTES:

DRAWN BY: MCDC

EDITED BY

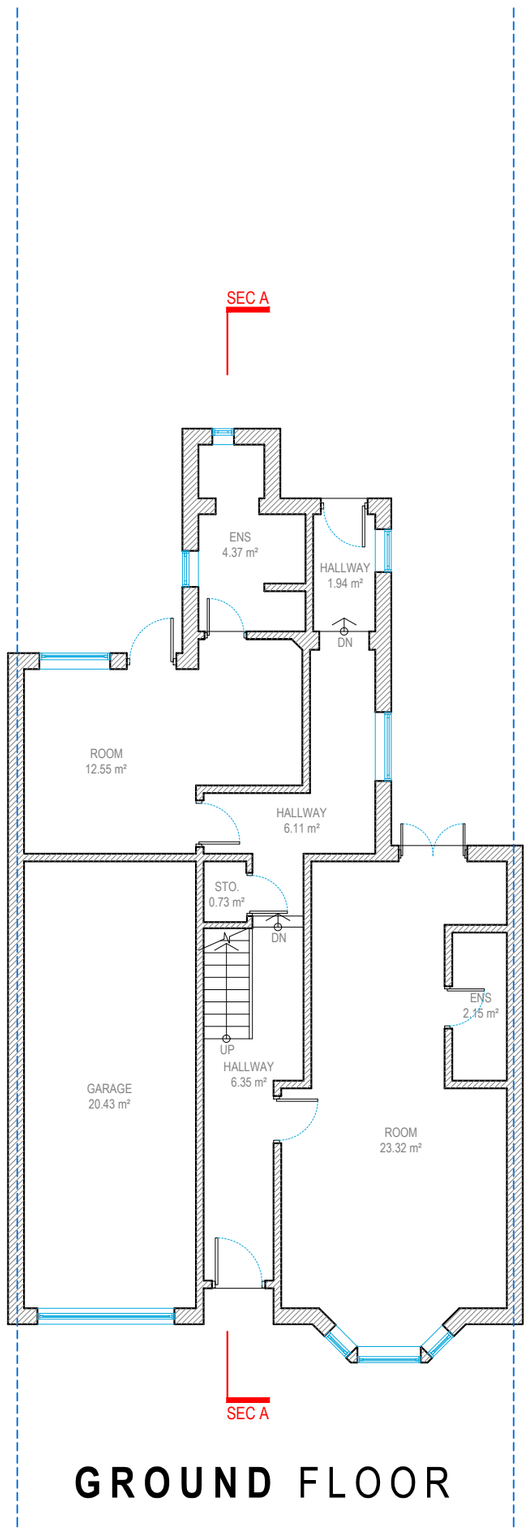

GROUND FLOOR

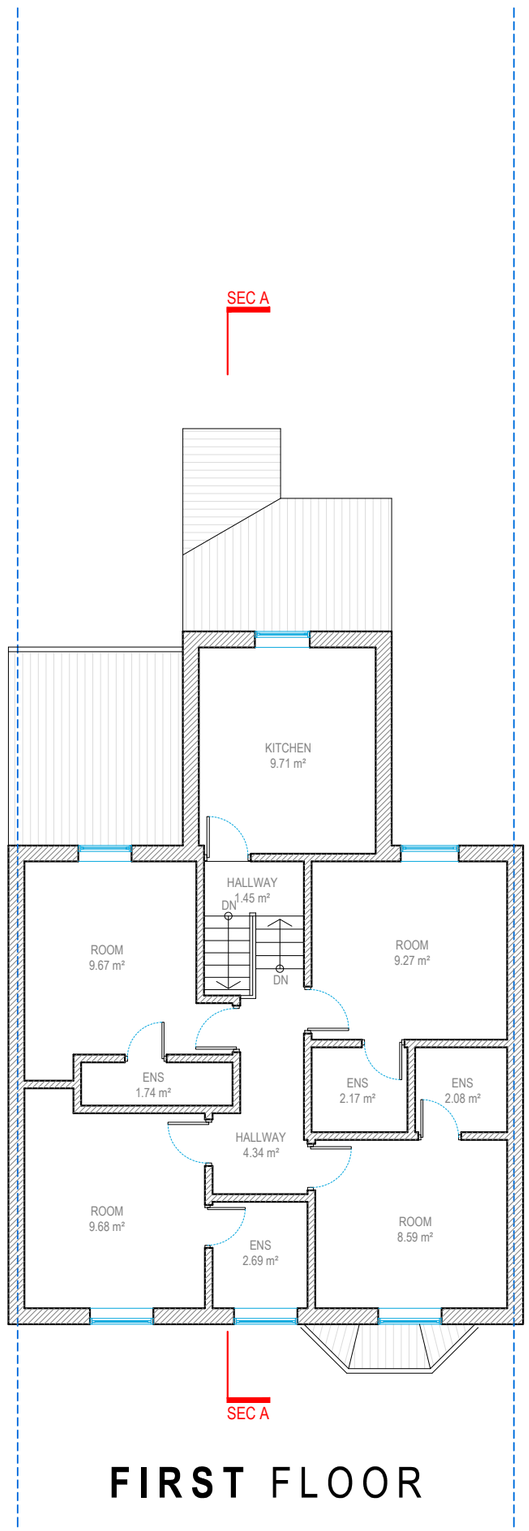

FIRST FLOOR

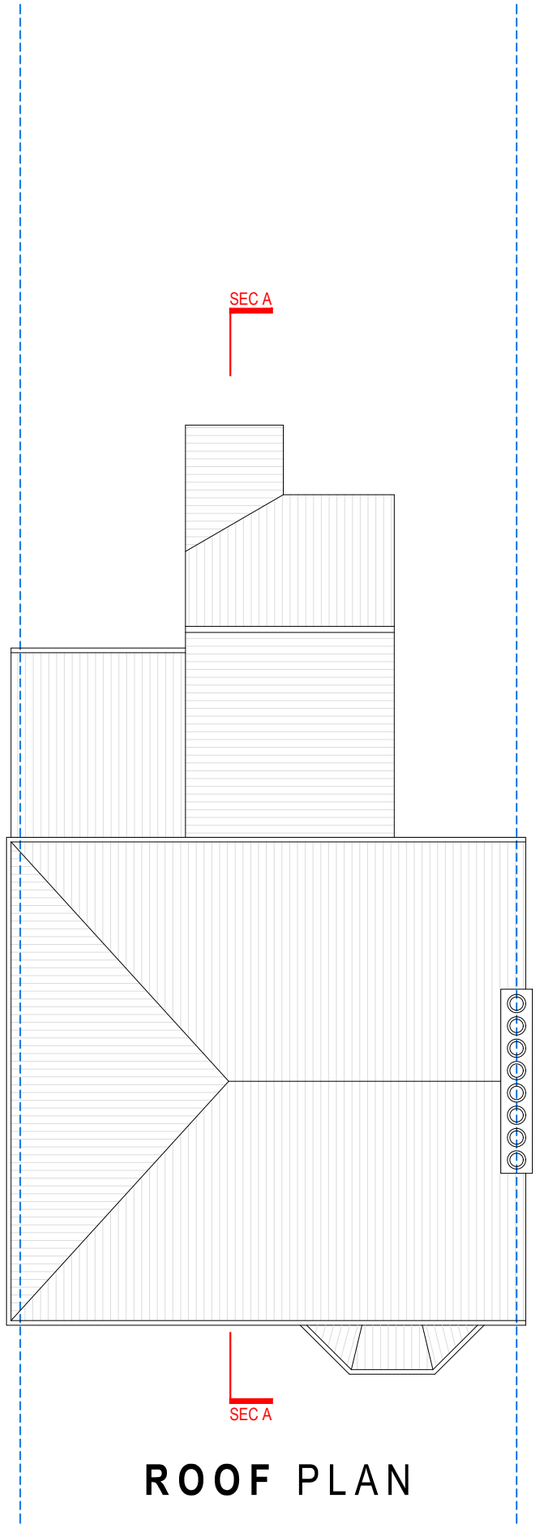

ROOF PLAN

Redwoods
PLANNING & EXTENSIONS

Address - Unit 4, Grosvenor Way, London E5 9ND
Phone - 020 3781 8008
E-mail - office@redwoodsprojects.co.uk
Web - www.redwoodsprojects.co.uk

Any errors on Dimensions to be reported to the Architect prior to commencement of Works.
Dimensions and areas are based on survey information.
This drawing is copyright © Redwoods Projects.
All dimensions to be checked on site Prior work.

REFERENCE: 1 COLLESS ROAD, LONDON N15 4NR, UK

TITLE: EXISTING DRAWINGS
FLOOR PLANS

PROJECT No: 2039

DATE: 14-12-2023

SHEET No: E 01

N

0 1 2 5m scale 1:100 @A3

NOTES:

DRAWN BY: MCDC

EDITED BY:

FRONT ELEVATION
NORTH ELEVATION

SIDE ELEVATION
WEST ELEVATION

Redwoods
PLANNING & EXTENSIONS

Address - Unit 4, Grosvenor Way, London E5 9ND
Phone - 020 3781 8008
E-mail - office@redwoodsprojects.co.uk
Web - www.redwoodsprojects.co.uk

Any errors on Dimensions to be reported to the Architect prior to commencement of Works.
Dimensions and areas are based on survey information.
This drawing is copyright © Redwoods Projects.
All dimensions to be checked on site Prior work.

REFERENCE: 1 COLLESS ROAD, LONDON N15 4NR, UK

TITLE: EXISTING DRAWINGS
ELEVATIONS

PROJECT No 2039

DATE: 14-12-2023

SHEET No E 02

0 1 2 5m scale 1:100 @A3

NOTES:

DRAWN BY MCDC

EDITED BY

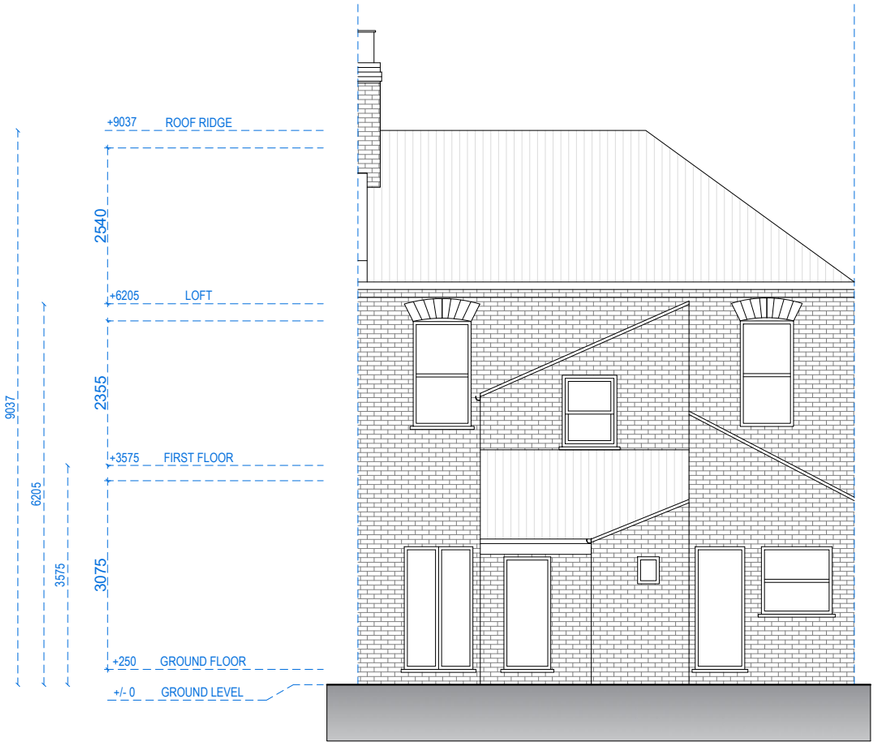

REAR ELEVATION
SOUTH ELEVATION

SIDE ELEVATION
EAST ELEVATION

Redwoods PLANNING & EXTENSIONS

Address - Unit 4, Grosvenor Way, London E5 9ND
Phone - 020 3781 8008
E-mail - office@redwoodsprojects.co.uk
Web - www.redwoodsprojects.co.uk

Any errors on Dimensions to be reported to the Architect prior to commencement of Works.
Dimensions and areas are based on survey information.
This drawing is copyright © Redwoods Projects.
All dimensions to be checked on site Prior work.

REFERENCE: 1 COLLESS ROAD, LONDON N15 4NR, UK

TITLE: EXISTING DRAWINGS ELEVATIONS

PROJECT No: 2039

DATE: 14-12-2023

SHEET No: E 03

0 1 2 5m scale 1:100 @A3

NOTES:

DRAWN BY: MCDC

EDITED BY:

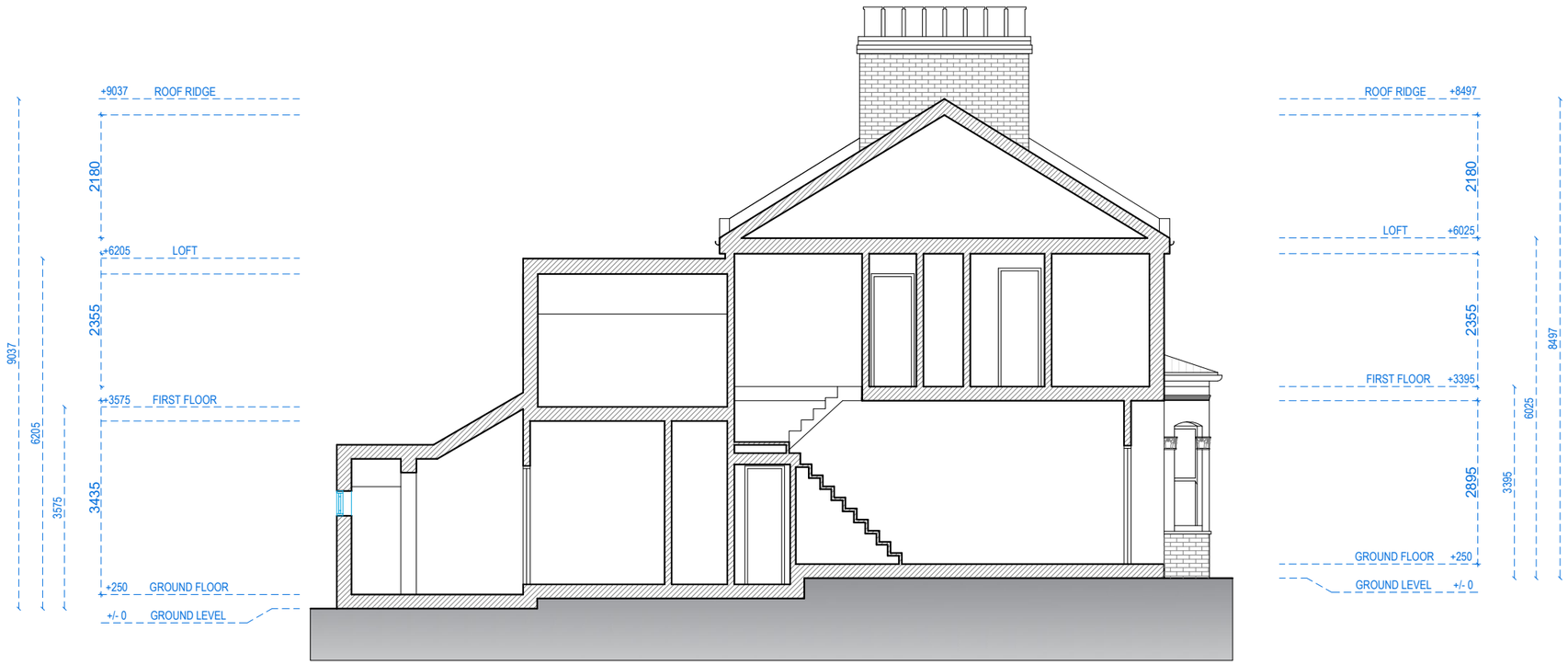

SECTION AA

Redwoods PLANNING & EXTENSIONS

Address - Unit 4, Grosvenor Way, London E5 9ND
Phone - 020 3781 8008
E-mail - office@redwoodsprojects.co.uk
Web - www.redwoodsprojects.co.uk

Any errors on Dimensions to be reported to the Architect prior to commencement of Works.
Dimensions and areas are based on survey information.
This drawing is copyright © Redwoods Projects.
All dimensions to be checked on site Prior work.

REFERENCE: 1 COLLESS ROAD, LONDON N15 4NR, UK

TITLE: EXISTING DRAWINGS
SECTION

PROJECT No 2039

DATE: 14-12-2023

SHEET No E 04

0 1 2 5m

scale 1:100 @A3

NOTES:

DRAWN BY MCDC

EDITED BY

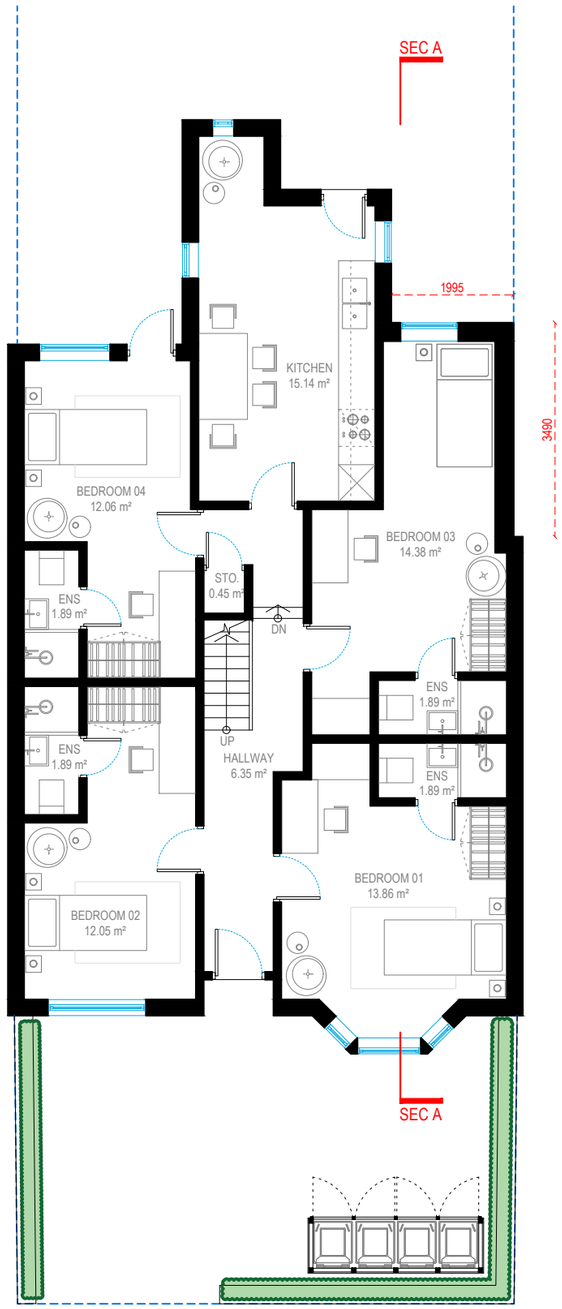

GROUND FLOOR

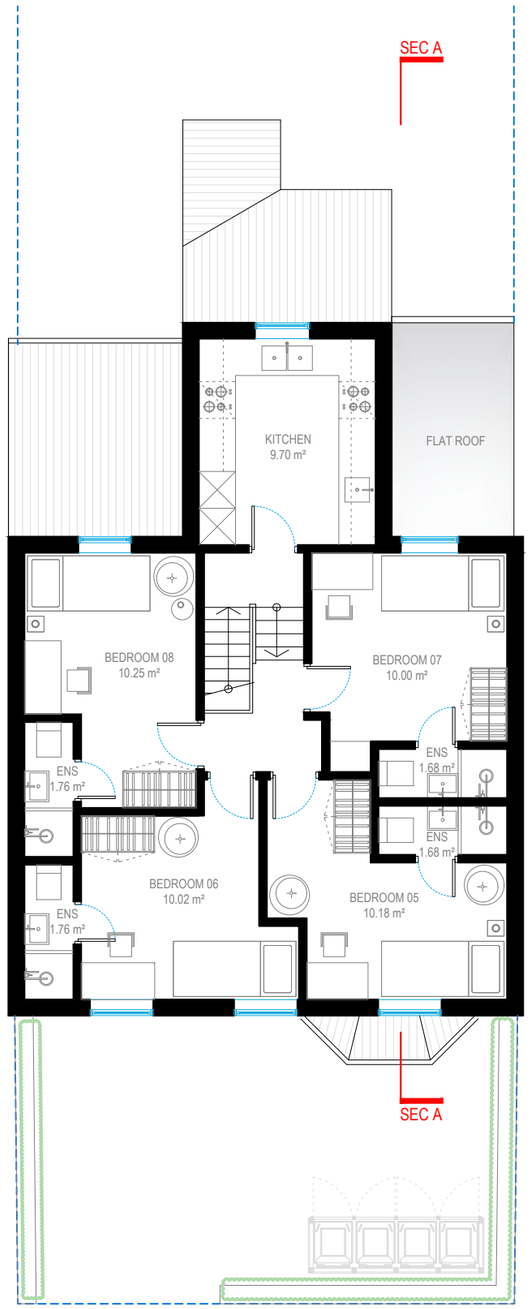

FIRST FLOOR

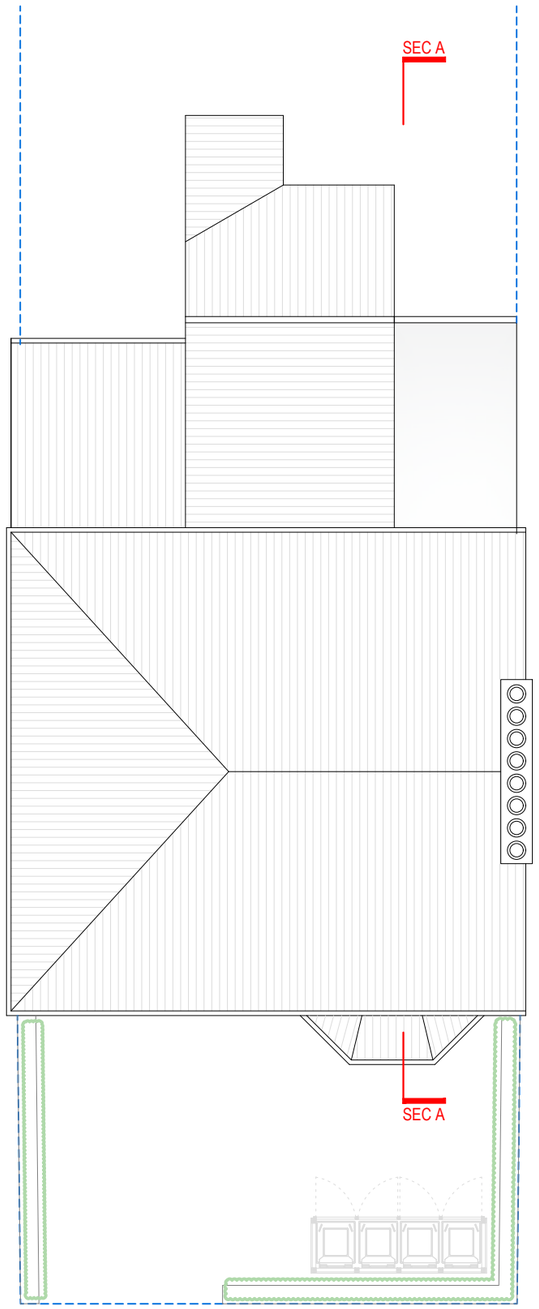

ROOF PLAN

Redwoods
PLANNING & EXTENSIONS

Address - Unit 4, Grosvenor Way, London E5 9ND
Phone - 020 3781 8008
E-mail - office@redwoodsprojects.co.uk
Web - www.redwoodsprojects.co.uk

Any errors on Dimensions to be reported to the Architect prior to commencement of Works.
Dimensions and areas are based on survey information.
This drawing is copyright © Redwoods Projects.
All dimensions to be checked on site Prior work.

REFERENCE: 1 COLLESS ROAD, LONDON N15 4NR, UK

TITLE: PROPOSED DRAWINGS
FLOOR PLANS

PROJECT No: 2039

DATE: 14-12-2023

SHEET No: P 01 REV A

N

0 1 2 5m

scale 1:100 @A3

NOTES:

DRAWN BY: MCDC

EDITED BY:

FRONT ELEVATION
NORTH ELEVATION

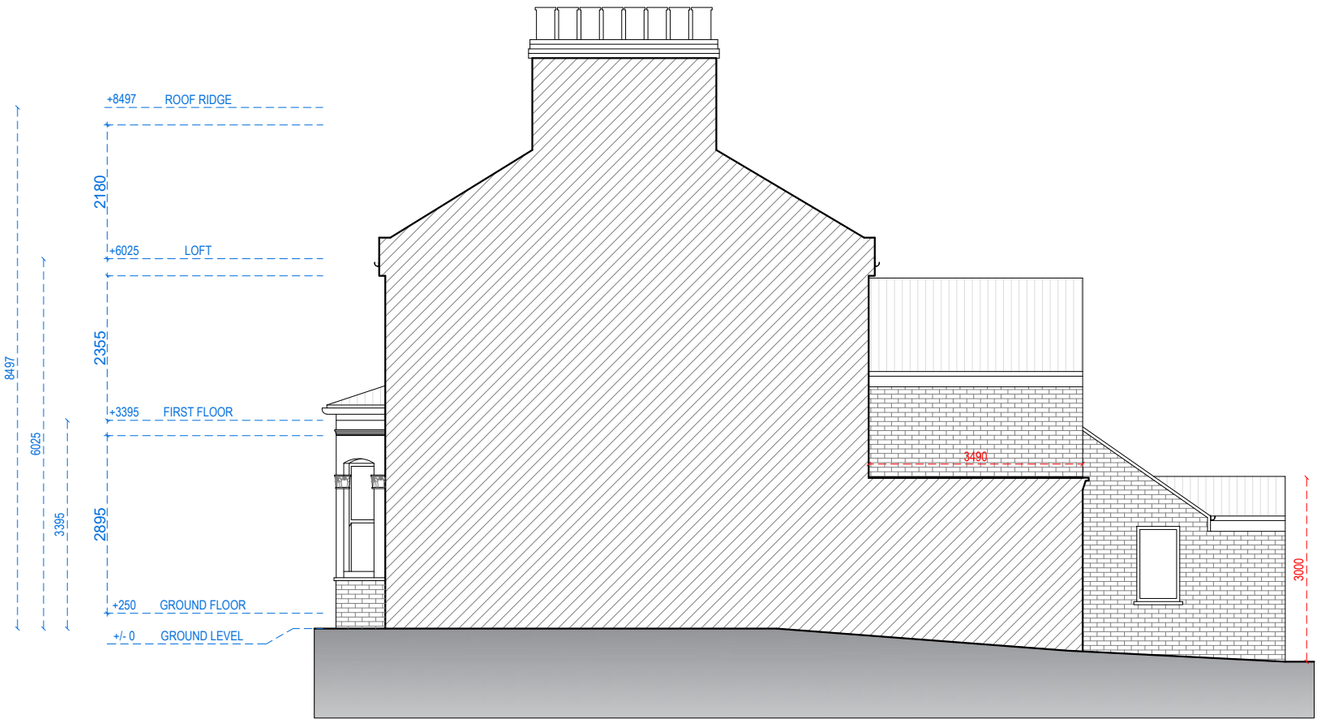

SIDE ELEVATION
WEST ELEVATION

Redwoods
PLANNING & EXTENSIONS

Address - Unit 4, Grosvenor Way, London E5 9ND
Phone - 020 3781 8008
E-mail - office@redwoodsprojects.co.uk
Web - www.redwoodsprojects.co.uk

Any errors on Dimensions to be reported to the Architect prior to commencement of Works.
Dimensions and areas are based on survey information.
This drawing is copyright © Redwoods Projects.
All dimensions to be checked on site Prior work.

REFERENCE: 1 COLLESS ROAD, LONDON N15 4NR, UK

TITLE: PROPOSED DRAWINGS
ELEVATIONS

PROJECT No 2039

DATE: 14-12-2023

SHEET No **P 02 REV A**

0 1 2 5m scale **1:100 @A3**

NOTES:

DRAWN BY MCDC

EDITED BY

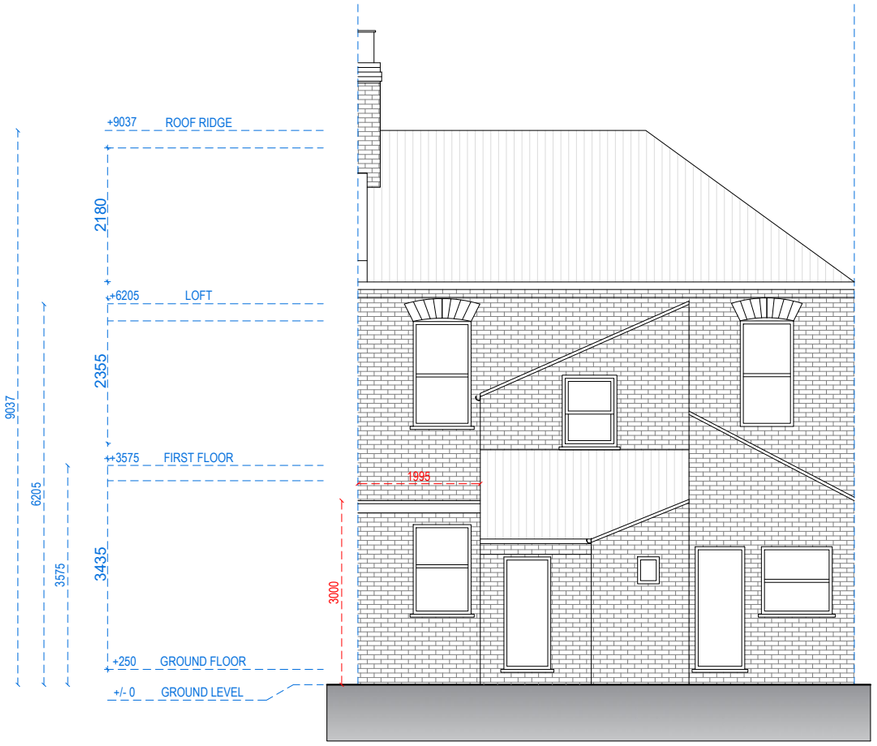

REAR ELEVATION
SOUTH ELEVATION

SIDE ELEVATION
EAST ELEVATION

Redwoods PLANNING & EXTENSIONS

Address - Unit 4, Grosvenor Way, London E5 9ND
Phone - 020 3781 8008
E-mail - office@redwoodsprojects.co.uk
Web - www.redwoodsprojects.co.uk

Any errors on Dimensions to be reported to the Architect prior to commencement of Works.
Dimensions and areas are based on survey information.
This drawing is copyright © Redwoods Projects.
All dimensions to be checked on site Prior work.

REFERENCE: 1 COLLESS ROAD, LONDON N15 4NR, UK

TITLE: PROPOSED DRAWINGS ELEVATIONS

PROJECT No: 2039

DATE: 14-12-2023

SHEET No: P 03 REV A

0 1 2 5m scale 1:100 @A3

NOTES:

DRAWN BY: MCDC

EDITED BY:

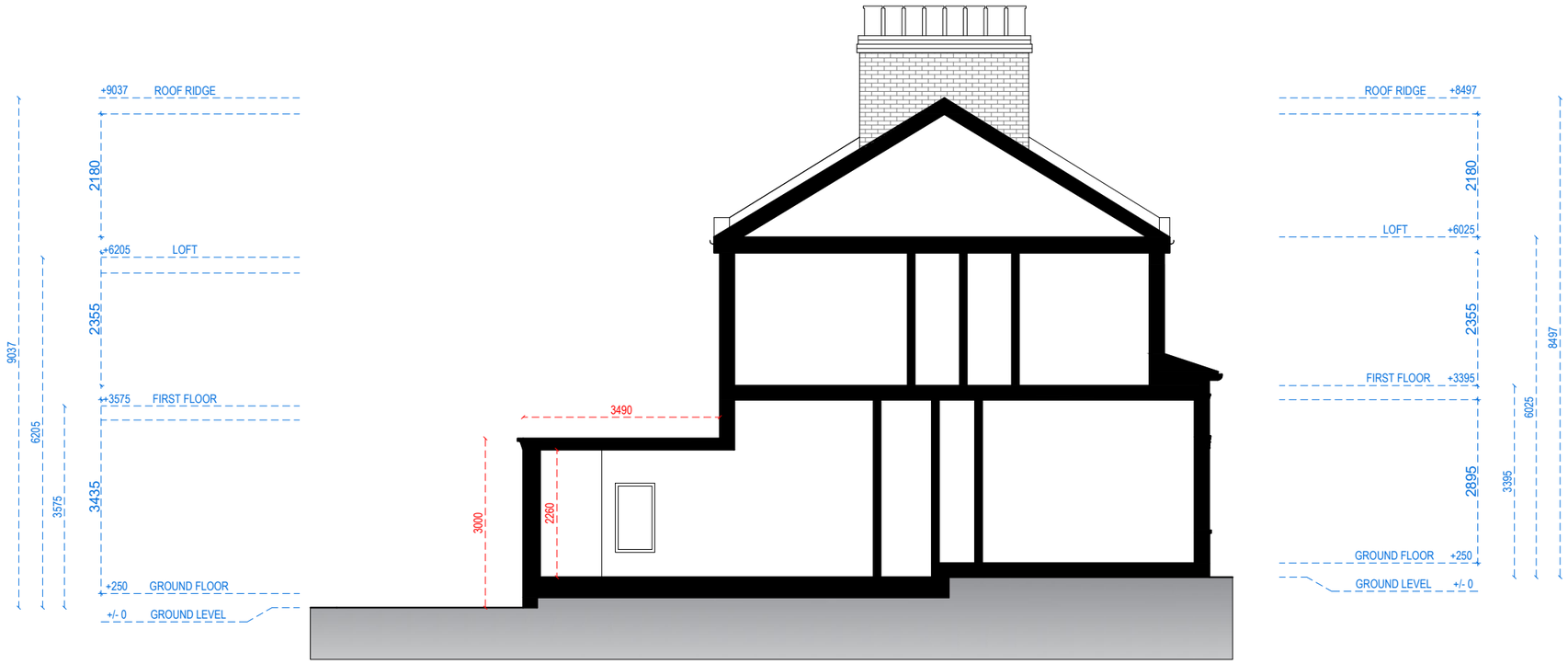

SECTION AA

Redwoods PLANNING & EXTENSIONS

Address - Unit 4, Grosvenor Way, London E5 9ND
Phone - 020 3781 8008
E-mail - office@redwoodsprojects.co.uk
Web - www.redwoodsprojects.co.uk

Any errors on Dimensions to be reported to the Architect prior to commencement of Works.
Dimensions and areas are based on survey information.
This drawing is copyright © Redwoods Projects.
All dimensions to be checked on site Prior work.

REFERENCE: 1 COLLESS ROAD, LONDON N15 4NR, UK

TITLE: PROPOSED DRAWINGS
SECTION

PROJECT No 2039

DATE: 14-12-2023

SHEET No **P 04 REV A**

0 1 2 5m scale **1:100 @A3**

NOTES:

DRAWN BY MCDC

EDITED BY

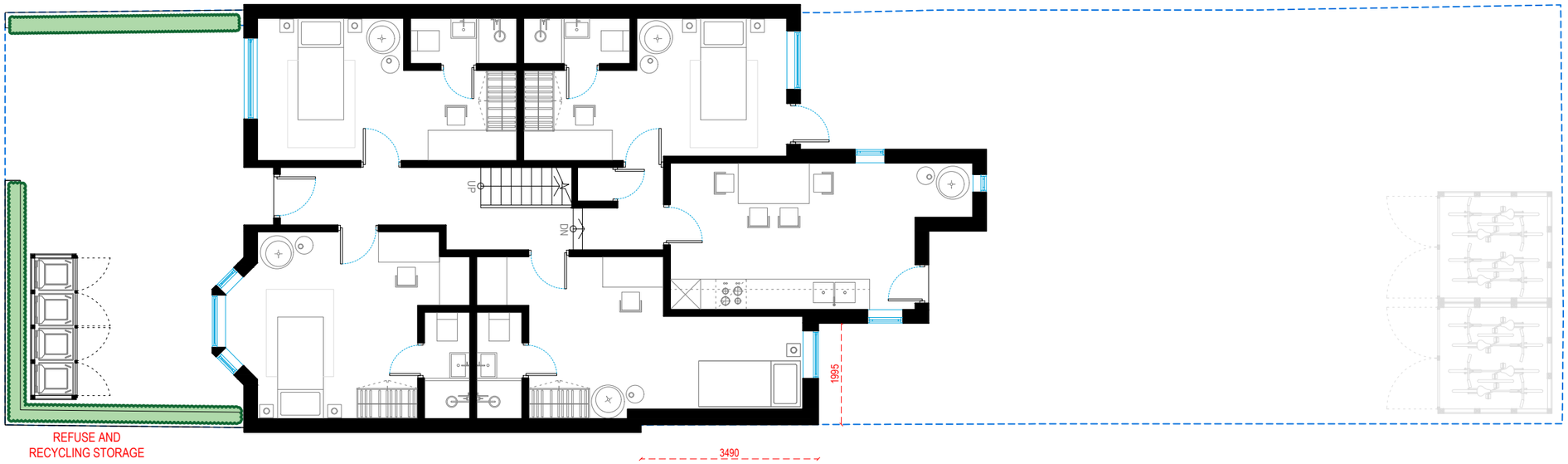

STORAGE LOCATION

0 1 2 5m scale 1:100 @A3

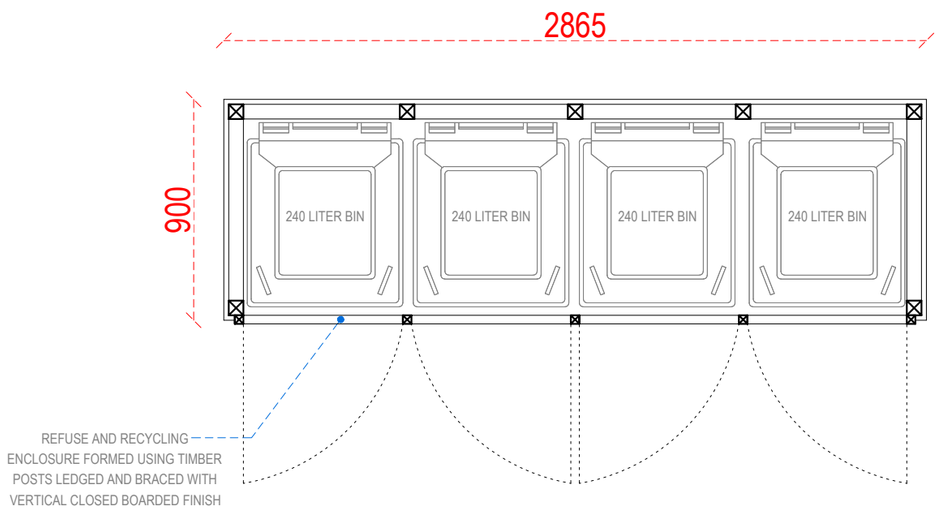

PLAN

0 0.25 0.50 1.25m scale 1:25 @A3

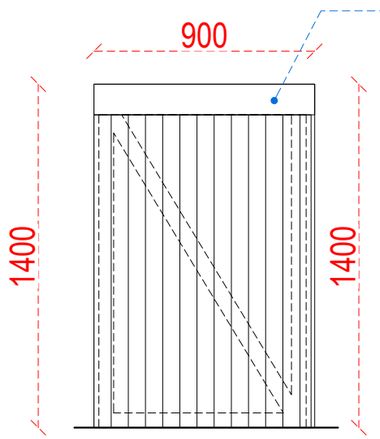

SIDE ELEVATION

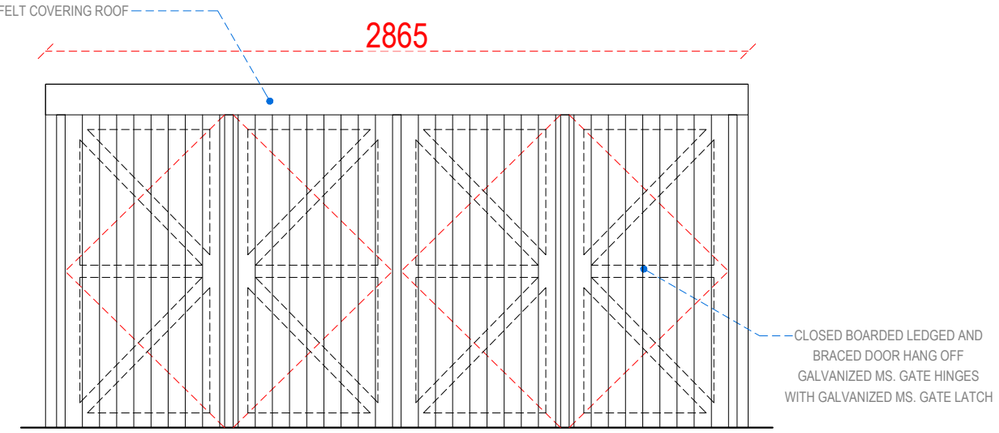

FRONT ELEVATION

TIMBER REFUSE AND RECYCLING ENCLOSURE STORAGE DETAILS

Redwoods PLANNING & EXTENSIONS

Address - Unit 4, Grosvenor Way, London E5 9ND
Phone - 020 3781 8008
E-mail - office@redwoodsprojects.co.uk
Web - www.redwoodsprojects.co.uk

Any errors on Dimensions to be reported to the Architect prior to commencement of Works.
Dimensions and areas are based on survey information.
This drawing is copyright © Redwoods Projects.
All dimensions to be checked on site Prior work.

REFERENCE:	1 COLLESS ROAD, LONDON N15 4NR, UK
TITLE:	PROPOSED DRAWINGS SECTION
PROJECT No	2039
DATE:	14-12-2023
SHEET No	P 05
NOTES:	
DRAWN BY	MCDC
EDITED BY	

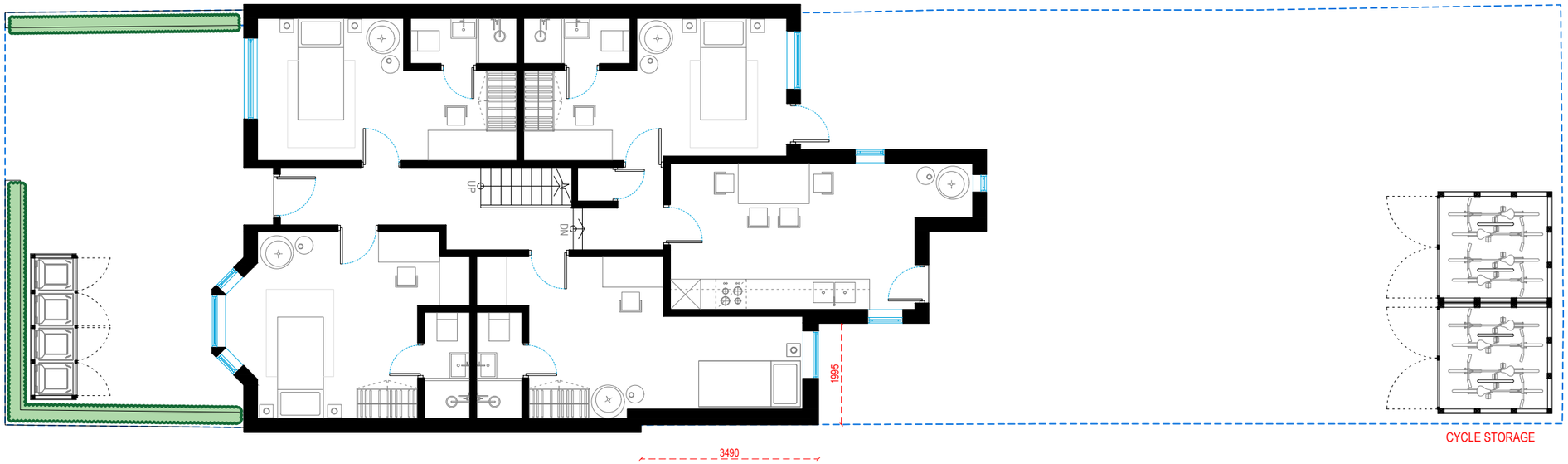

STORAGE LOCATION

0 1 2 5m scale 1:100 @A3

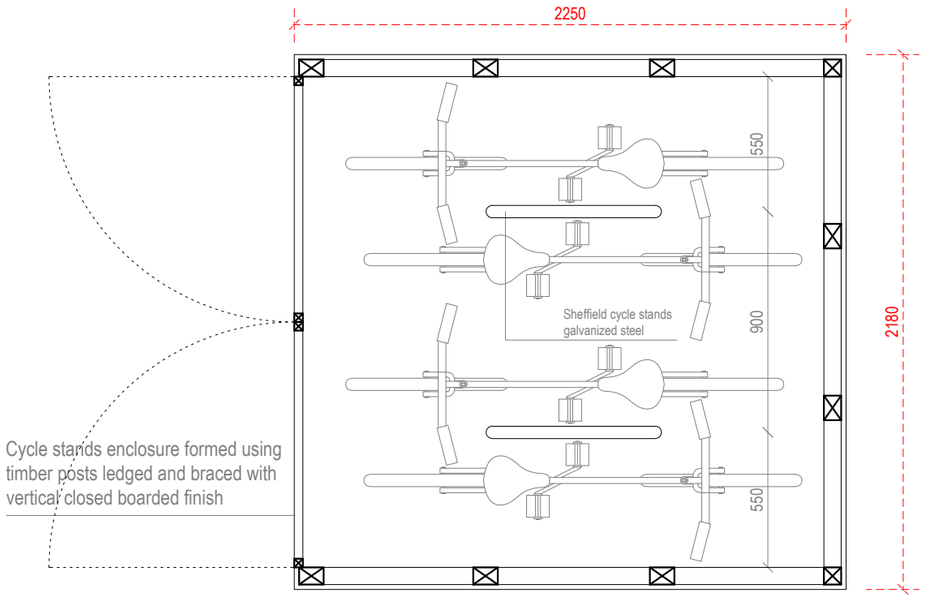

PLAN

0 0.25 0.50 1.25m scale 1:25 @A3

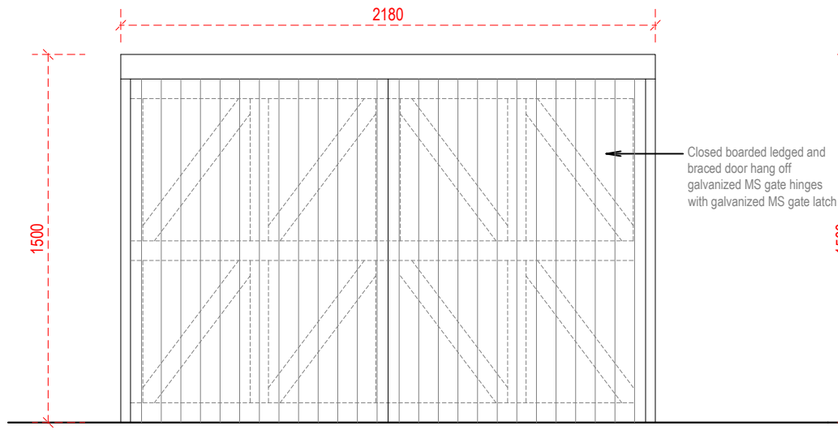

FRONT ELEVATION

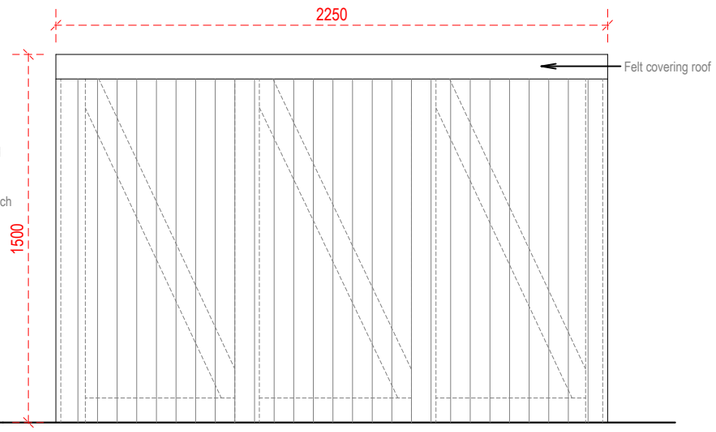

SIDE ELEVATION

TIMBER CYCLE ENCLOSURE STORAGE DETAILS

Redwoods Planning & Extensions

Address - Unit 4, Grosvenor Way, London E5 9ND
Phone - 020 3781 8008
E-mail - office@redwoodsprojects.co.uk
Web - www.redwoodsprojects.co.uk

Any errors on Dimensions to be reported to the Architect prior to commencement of Works.
Dimensions and areas are based on survey information.
This drawing is copyright © Redwoods Projects.
All dimensions to be checked on site Prior work.

REFERENCE:	1 COLLESS ROAD, LONDON N15 4NR, UK
TITLE:	PROPOSED DRAWINGS SECTION
PROJECT No	2039
DATE:	14-12-2023
SHEET No	P 06
NOTES:	
DRAWN BY	MCDC
EDITED BY	