Arboricultural Report

Tree Survey
Arboricultural Impact Assessment
& Tree Protection Plan

Land at
Shepherd's Close
London
N6

Prepared by:

The Mayhew Consultancy Ltd

30 Fair Lane
Robertsbridge
East Sussex
TN32 5AS

Tel: 07711 673138

www.cmarb.co.uk

AR/75319 December 2023

Contents

Section	Title	Page
1.0	Summary	3
2.0	Details of survey	4
3.0	Instructions	4
4.0	Site details	5
5.0	Planning history	5
6.0	Protected trees	5
7.0	Documents supplied	5
8.0	Existing trees	6
9.0	Arboricultural Impact Assessment (AIS)	6
10.0	Tree works	6
11.0	Arboricultural Method Statement (AMS)	6
12.0	Post development pressure	10
13.0	Sequence of works	10
14.0	Recommendations	10
15.0	Conclusion	11

Appendix A	Existing tree plan
Appendix B	Tree Protection Plan
Appendix C	Tree survey schedule
Appendix D	Tree survey key
Appendix E	BS 5837:2012 Cascade chart for tree quality assessment
Appendix F	BS 5837:2012 Figures 2 & 3 - Tree protection barriers
Appendix G	Sample tree protection warning sign
Appendix H	1) Scope of this report 2) Survey method

1.0 Summary

1.1 **Site summary:**
The subject site is located on land at Shepherd's Close, London, N6. The proposal is to construct a single, detached residential dwelling.

1.2 **Existing trees (Section 8 refers):**
I surveyed three individual off-site trees in November 2023.

1.3 **Condition of existing trees (Section 9 refers):**
No trees were found to be in such a condition that their removal is recommended irrespective of the outcome of this proposal.

1.4 **Consequences of development on trees (Section 9 refers):**
No trees would be lost as a direct consequence of implementing the proposal.

1.5 **Tree Works (Section 10 refers):**
No tree works are recommended in order to implement the proposal.

1.6 **Tree Protection (Section 11 refers):**
In order to protect the root systems of retained trees during the construction period, the following are recommended:

- The installation of one tree protection barrier
- The installation of one root barrier

1.7 **Conclusion:**
If the recommended tree protection measures are installed and adequately supervised, I consider that the proposal can be successfully implemented while protecting the retained trees to a level which complies with current arboricultural standards.

2.0 Survey details

The Site: Land at Shepherd's Close, London, N6

TMC Ref: AR/75319

Local authority: London Borough of Haringey

Survey date: 30th November 2023

Report date: 31st December 2023

Surveyed by: Clive Mayhew BA (Hons), MICFor, FArbor.A., CEnv

3.0 Instructions

3.1 I have been instructed to:

1. Survey the trees potentially affected by the proposal.
2. Produce an arboricultural report fully compliant with the recommendations contained within 'BS 5837:2012 Trees in relation to design, demolition and construction – Recommendations.'

3.2 My name is Clive Mayhew, and I am the author of this report. I have over 35 years of experience in tree, landscape and ecology management in both the public and private sectors. I am a Chartered Arboriculturist within the Institute of Chartered Foresters, a Chartered Environmentalist, and a Fellow of the Arboricultural Association.

4.0 Site details

4.1 **Site description:** The subject site is located on land at Shepherd's Close, London, N6.

4.2 **Proposal details:** The proposal is to construct a single, detached residential dwelling.

4.3 **Existing structures:** There are no existing structures on site.

4.4 **Existing topography:** The main body of the site is essentially level throughout, but the ground falls steeply away to the west beyond the site's boundary.

4.5 **Existing vegetation:** In addition to the trees listed within this report there was very little ground vegetation evident off-site to the west, due to the restriction of light from the overhead canopy. There is no ground vegetation within the site itself.

4.6 **Soils:** The soil type is of relevance because soils with a high clay content can be compacted, which in turn can be extremely damaging to tree roots. The British Geological website indicates the bedrock geology of the main body of the site to be clay, silt and sand from the London clay and Claygate clay formations. The clay content within such soils is likely to be high and as a consequence the tree protection measures advocated in this report are set at the highest level of current technical specifications.

5.0 Planning history

5.1 I have been given no specific details of the site's planning history.

6.0 Protected trees

6.1 The site is within Highgate Conservation Area which was designated on 21st December 1967. As a consequence of this, anyone proposing to cut down or carry out work on a tree within a conservation area is required to give the Local Planning Authority six weeks' prior notice. The purpose of this requirement is to give the Local Planning Authority an opportunity to consider whether a Tree Preservation Order should be made in respect of the tree(s).

6.2 It should be noted that the legal status of trees can change at any time through the serving of a new Tree Preservation Order or the creation of a Conservation Area, and this should be checked prior to the commencement of any works.

7.0 Documents supplied

7.1 I have been supplied with scheme plans by the scheme's applicant.

8.0 Existing trees

8.1 I surveyed three individual off-site trees in November 2023. These have been plotted on the existing tree plan at Appendix A, and described within the schedule at Appendix C.

8.1.1 I classed the trees according to the classifications outlined within BS 5837:2012 'Trees in relation to design, demolition and construction – Recommendations' (See Appendix E).

9.0 Arboricultural Impact Assessment (AIS)

9.1 The recommendations made here relating to tree retention, removal and planting are informed by current arboricultural, planning and urban design best practice, primarily British Standard 5837:2012 'Trees in relation to design, demolition and construction – Recommendations,' which advocates a pragmatic approach to tree removal and retention, based on sustainability.

9.2 **Trees requiring removal *irrespective* of the proposal**

9.2.1 No trees were found to be in such a condition that their removal is recommended irrespective of the outcome of this proposal.

9.3 **Trees requiring removal as a *consequence* of the proposal**

9.3.1 No trees would be directly lost if the proposal were to be implemented.

10.0 Tree Works

10.1 No specific tree works are recommended as a consequence of this proposal:

10.2 All works should comply with the recommendations contained within British Standard 3998:2010 'Tree Work' and undertaken with the consent of the local planning authority – if such consent is required.

11.0 Arboricultural Method Statement (AMS)

11.1 Root Protection Areas (RPAs)

The identification of Root Protection Areas is the primary means by which retained trees are protected on construction sites. No unspecified activity should occur within any prescribed RPA, access should only be permitted with prior approval of the Local Planning Authority, and encroachment should normally only take place if the ground beneath is suitably protected.

11.1.1 BS 5837:2012 provides arboriculturists with a method to determine the extent to which excavations associated with construction works might have a damaging effect on the roots of adjacent trees. The Standard enables an RPA to be calculated from the diameter of each retained tree, and this is usually described as a circle with a radius at the prescribed distance from that tree.

11.2 RPAs and the subject site:

11.2.1 Some aspects of the proposed development will potentially encroach into the nominal RPAs of retained trees on site, while other activity will occur close to them.

11.2.2 **Site specific considerations:**
I consider the following factors to be relevant in considering the extent of these encroachments in a site-specific context:

- The illustrated Root Protection Areas at Appendix B are based upon a notional representation of the RPA as a circle centred upon the base of the stem. However, the British Standard recognises the potential for this to be a crude oversimplification of actual root spread, and that specific site conditions can result in the development of asymmetrical root systems – See Paragraph 4.6.2 of BS 5837:2012. In such situations the British Standard suggests that it should be demonstrated that the trees in question should remain 'viable and that the area lost to encroachment can be compensated for elsewhere, contiguous with its RPA' – See paragraph 5.3.1 of BS 5837:2012.

- **The subject site:** Given the nature of the site, it would be reasonable to generally expect the soils within, and adjacent to, the illustrated RPAs to be capable of supporting root growth. As a consequence, it would not be unreasonable to exert a degree of flexibility - if required - in the interpretation of individual RPAs.

- The proposal plan at Appendix B illustrates a degree of encroachment of the nominal RPAs of two trees beneath the dwelling. However:

    - The contiguous soils to the west of these trees appear to be capable of supporting root growth.

    - The proportion of encroachment is only a small percentage of the total RPAs – specifically 13% of T2 and 11% of T3.

    - In addition to the above, any roots from third party trees can be considered to be trespassing over the site's boundaries, and as such the owner of the property may be able to exercise their right in common law to remove those encroaching roots should they desire to do so.

11.2.3 In light of the above factors, I make the following recommendations regarding specific tree protection measures:

11.3 Protective barriers

11.3.1 BS 5837:2012 recommends that the RPAs of the subject trees should be protected by the erection of barriers, the preferred form of which consists of welded mesh 'Heras' type panels 1.8 metres high, mounted on a braced scaffolding frame as detailed in Figure 2 & 3 of BS 5837:2012. (See Appendix F). The barriers should carry laminated signs stating: "Construction exclusion zone – No Access," or similar. (See Appendix G). It is recommended that gaps should be left beneath the bottom of any perimeter site fencing and the ground to allow for the passage of foraging mammals.

11.3.2 **The subject site**: The requirement for one Tree Protection Barrier has been identified and this has been illustrated at Appendix B.

- **TPB 1** - This barrier is located along the site's southwestern and western boundaries. It is designed to protect the RPAs and stems of trees from potential damage during the construction period.

11.4 Installation of a Root Barrier

11.4.1 It is intended to install a root barrier along the site's western and southwestern boundaries. The footprint of this barrier has been illustrated in green at Appendix B.

11.4.2 In order to install the barrier, it will be necessary to implement the following minimum requirements:

1) A trench at least 30cm wide and 1.5m deep will need to be excavated within the footprint illustrated at Appendix B.

2) The sides and base of the trench should be lined with a semi-permeable geotextile material.

3) The trench should be backfilled with an inert material such as graded beach stone.

11.4.3 If any roots are encountered in this area during the execution of the works, the following treatment should be adopted:

1) Any roots encountered should be severed using a sharp tool.

2) Backfilling should be carefully carried out to avoid direct damage to the retained roots and excessive compaction of the soil around them. Backfilling should be carried out using the excavated soil. This should not be compacted but lightly "tamped" and usually left slightly proud of the surrounding surface to allow natural settlement. Other materials should not be incorporated into the backfill.

3) Fine roots are vulnerable to desiccation once they are exposed to the air. The greatest risk to these roots occurs when there are rapid fluctuations in air temperature around them - e.g., winter diurnal temperatures. It is important to protect exposed roots where the excavation is to be left open overnight when there is a risk of frost. Before leaving the site at the end of the day, the exposed roots should be wrapped with dry sacking. This sacking must be removed before the trench is backfilled.

4) If roots over 25mm in diameter are found, the advice of a suitably qualified arboriculturist should be sought before any severance takes place.

11.4.4 Once a root barrier has been installed to the specification above, a working assumption can be made that no roots from the adjacent trees will be present within the site's footprint and consequently no additional tree protection measures will be required, apart from the Tree Protection Barrier specified at 11.3 above.

11.5 Demolition

The proposal does not include any demolition works but works of any nature should not commence until the tree protection measures specified above have been installed.

11.6 Utilities

11.6.1 Where supply of any underground utilities passes through the RPAs of retained trees BS 5837:2015 recommends that detailed plans should be drawn up in conjunction with an appropriately qualified arboriculturist - See Section 7.7.

11.7 Other general activities

11.7.1 Many of the activities which occur on construction sites are potentially damaging to trees. These include the location of site huts, parking arrangements, the storage of materials, the storage of rubbish, and the movement and operation of plant. It is important to understand the range of potentially damaging activities that might occur on a site and ensure at an early stage that these possible conflicts are recognised and avoided. Therefore, areas designated for site huts, parking and storage of materials should be identified prior to the commencement of works.

11.7.2 **The subject site:** There appears to be adequate space within the body of the site to ensure that areas for storage and other aspects of site accommodation are not in conflict with the tree protection measures recommended in this report. However, this aspect of site management should be established and agreed prior to the commencement of works.

12.00 Post development pressure

12.1 When new structures are located near to trees there may be pressure to prune or remove them because of concerns that the trees might fail, or because of perceived shading. Inevitably the tolerance of individuals towards trees varies considerably; one may take exception to the proximity of adjacent trees while another will happily coexist with the same juxtaposition. In addition, internal layouts should be mindful of the perceived problems of shading, and consequently this issue can be addressed at the design stage.

12.2 **The subject site:** There appears to be adequate provision of space between the crowns of retained trees and the proposed building.

12.3 Given the nature, extent and orientation of the proposal, I would not anticipate any substantial problems in the relationship between existing trees and any future resident's perceptions. As a consequence, I would not expect there to be any significant post development pressure directed towards the retained trees on site.

12.4 The trees to the west are within the ownership of the Local Authority who would be expected to exert both an appropriate and measured control over the future management of these trees, and thus not succumb to frivolous requests to prune or remove them.

13.0 Sequence of works

13.1 The sequence of works should be as follows:

1. Erection of the tree protection barrier
2. Installation of the root barrier
3. Construction works
4. Removal of the tree protection barrier

14.0 Recommendations

14.1 It is recommended that the tree protection measures advocated in this report should be followed at all times. Any deviation should only occur following consultation with the local authority's arboricultural officer, and then only with their specific approval.

14.2 It is recommended that a suitably qualified arboriculturist supervises the installation of the tree protection measures and confirms that they comply with BS 5837:2012, and if necessary briefs the individual who will be responsible for the maintenance of tree protection measures for the duration of the works.

14.3 An individual should be identified as a point of contact for arboricultural matters for the duration of the works. This individual will need to be familiar with the arboricultural constraints presented by the site, the tree protection measures that have been installed, and the requirement to keep those measures adequately monitored and maintained.

15.0 Conclusion

15.1 I consider that this scheme is acceptable in arboricultural terms and that the subject trees can be protected according to current standards, providing the recommended mitigation measures are adopted.

APPENDIX A

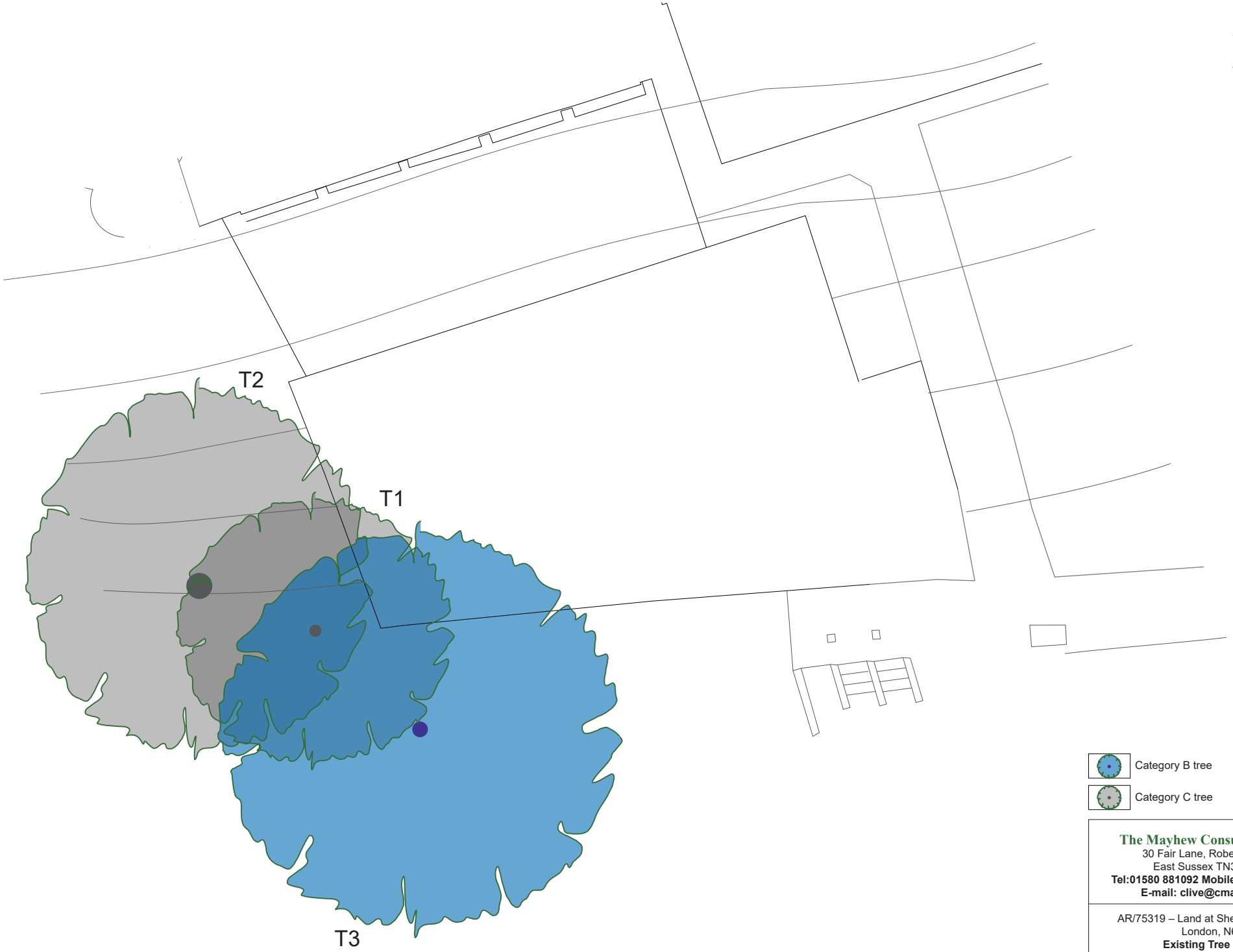

Category B tree

Category C tree

The Mayhew Consultancy Ltd
30 Fair Lane, Robertsbridge
East Sussex TN32 5DA
Tel:01580 881092 Mobile:07711 673138
E-mail: clive@cmarb.co.uk

AR/75319 – Land at Shepherd's Close
London, N6
Existing Tree Plan
December 2023
Do not scale from drawing

APPENDIX B

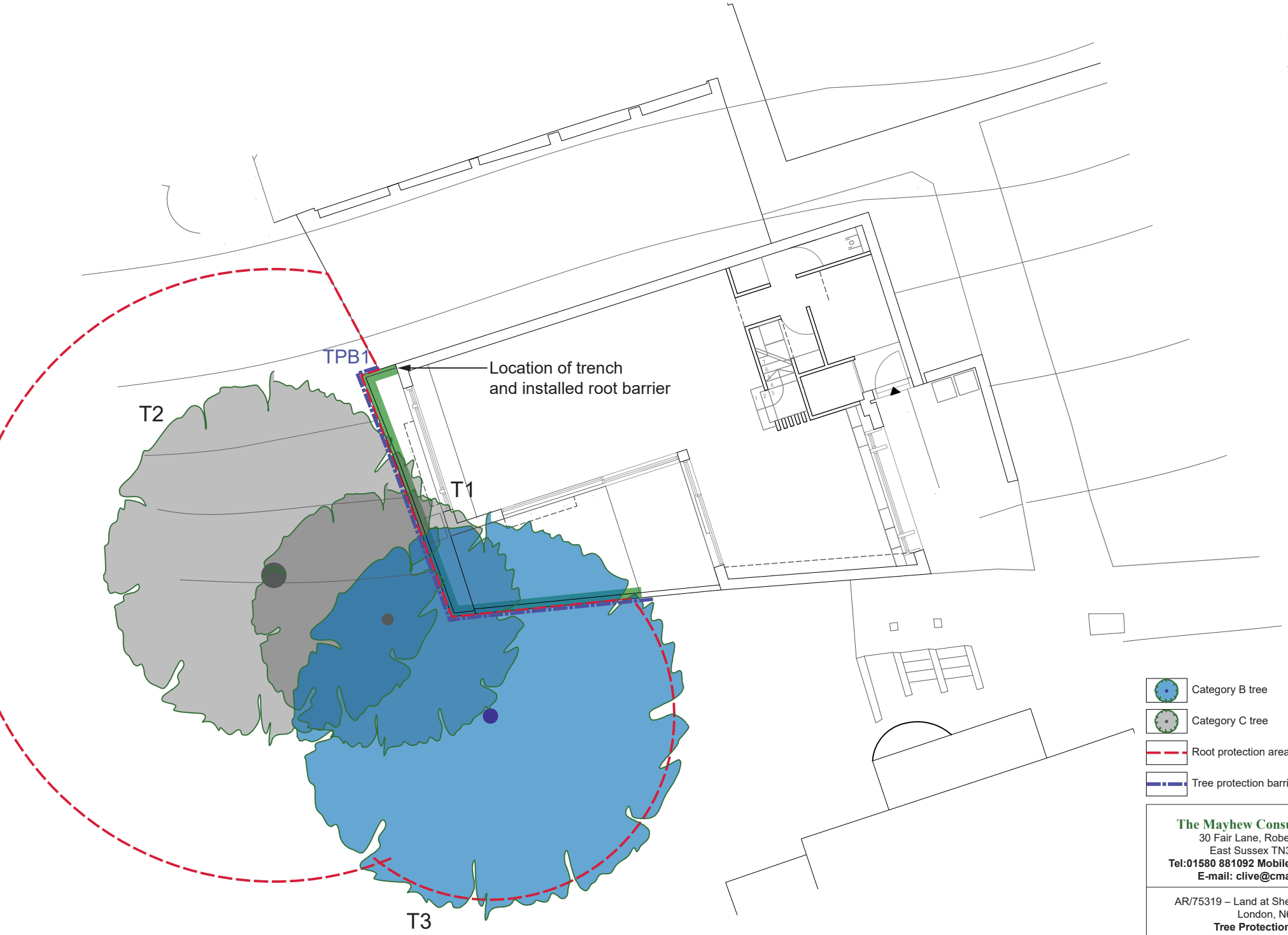

The Mayhew Consultancy Ltd
30 Fair Lane, Robertsbridge
East Sussex TN32 5DA
Tel:01580 881092 Mobile:07711 673138
E-mail: clive@cmarb.co.uk

AR/75319 – Land at Shepherd's Close
London, N6
Tree Protection Plan
December 2023
Do not scale from drawing

Tree Survey – 30th December 2023

No	Species	Ht.	Stem dia.	RPA Rad	RPA Area	Crown spread N – S – E - W				CB	Age class	Phy con	Str con	ECR	Class	Observations & recommendations
T1	Sycamore	14	35	**4.2**	55	4	4	4	4	6	SM	F	F	M	C	Established, but unexceptional sycamore, off-site to the west. Dense ivy to crown.
T2	Ash	16	75	**9.0**	255	6	5	5	5	6	M	F	F	S	C	Off-site. Triple stemmed @ 1.5m. Evidence of ash dieback in crown in 2019, which continues, and the crown appears to be generally thin. Dense ivy to crown.
T3	Lime	16	45	**5.4**	92	6	6	6	6	8	M	G	F	M	B	Established off-site tree to south of site. Previously the crown was reduced.

Survey sheet key

Tree No	**Tree reference number** as used in the report and survey plan T = Tree G= Group H = Hedge W = Woodland
Ht	**Tree height** in metres
Stem dia.	**Stem diameter** in millimetres Measured at 1.5 metres above ground level, or immediately above the root flare of multi-stemmed trees M = Multi-stemmed tree
Crown sp	**Crown spread** measured in metres from the stem to the four compass points
Crown break	**Height of crown** clearance above adjacent ground level, given in metres
Age class	**Age class** Y **=** Young: Staked or newly established tree SM = Semi-mature: An established tree at a stage of rapid growth EM = A tree nearing its ultimate canopy size for its situation M = Mature: A tree at its ultimate canopy size for its situation OM = Over mature: A mature tree smaller than its ultimate canopy size, often such trees are of great historical or ecological importance.
P. Con	**Physiological condition** of the tree expressed through an assessment of its general well-being G = Good, F = Fair, P = Poor, D = Dead
S. Con	**Structural condition** of the tree G = Good, F = Fair, P = Poor, D = Dangerous
R.C.	**Estimated remaining contribution** expressed in years D = <10, S = 10-20, M = 20-40, L = >40
BS Cat	**Tree category** graded as per the guidance given within Table 1 of BS 5837:2012 – See Appendix E A - Green = Trees of high quality with an estimated remaining life expectancy of at least 40+ years B - Blue = Trees of moderate quality with an estimated remaining life expectancy of at least 20 years C - Grey = Trees of low quality with an estimated remaining life expectancy of at least 10 years, or young trees with a stem diameter below 150mm U – Red = Trees in such a condition that they cannot be realistically retained for longer than 10 years.
RPA ~ R	**Root Protection Area** radius, as measured in metres from the centre of the tree
RPA ~ A	**Root Protection Area** expressed in square metres

BS 5837:2012 Table 1 – Cascade chart for tree quality assessment

Category and Definition	Criteria (including subcategories where appropriate)			Identification on plan
Trees unsuitable for retention				
Category U Trees in such a condition that they cannot realistically be retained as living trees in the context of the current land use for longer than 10 years.	• Trees that have a serious, irremediable, structural defect, such that their early loss is expected due to collapse, including those that will become unviable after removal of other category U trees (e.g. where, for whatever reason, the loss of companion shelter cannot be mitigated by pruning) • Trees that are dead or are showing signs of significant, immediate, and irreversible overall decline • Trees infected with pathogens of significance to the health and/or safety of other trees nearby, or very low quality trees suppressing adjacent trees of better quality NOTE Category U trees can have existing or potential conservation value which it might be desirable to preserve.			DARK RED
	1. Mainly arboricultural values	**2. Mainly landscape values**	**3. Mainly cultural values, including conservation**	
Trees to be considered for retention				
Category A **Trees of high quality** with an estimated remaining life expectancy of at least 40 years	Trees that are particularly good examples of their species, especially if rare or unusual; or those that are essential components of groups, or of formal or semi-formal arboricultural features (e.g. the dominant and/or principal trees within an avenue)	Trees, groups or woodlands of particular visual importance as arboricultural and/or landscape features	Trees, groups or woodlands of significant conservation, historical, commemorative or other value (e.g. veteran trees or wood-pasture)	LIGHT GREEN
Category B **Trees of moderate quality** with an estimated remaining life expectancy of at least 20 years	Trees that might be included in category A, but are downgraded because of impaired condition (e.g. presence of significant though remediable defects, including unsympathetic past management and storm damage), such that they are unlikely to be suitable for retention for beyond 40 years; or trees lacking the special quality necessary to merit the category A designation	Trees present in numbers, usually growing as groups or woodlands, such that they attract a higher collective rating than they might as individuals; or trees occurring as collectives but situated so as to make little visual contribution to the wider locality	Trees with material conservation or other cultural value	MID BLUE
Category C **Trees of low quality** with an estimated remaining life expectancy of at least 10 years, or young trees with a stem diameter below 150mm	Unremarkable trees of very limited merit or such impaired condition that they do not qualify in higher categories	Trees present in groups or woodlands, but without this conferring on them significantly greater landscape value; and/or trees offering low or only temporary/transient landscape benefits	Trees with no material conservation or other cultural value	GREY

BS 5837:2012 - Tree protection fencing

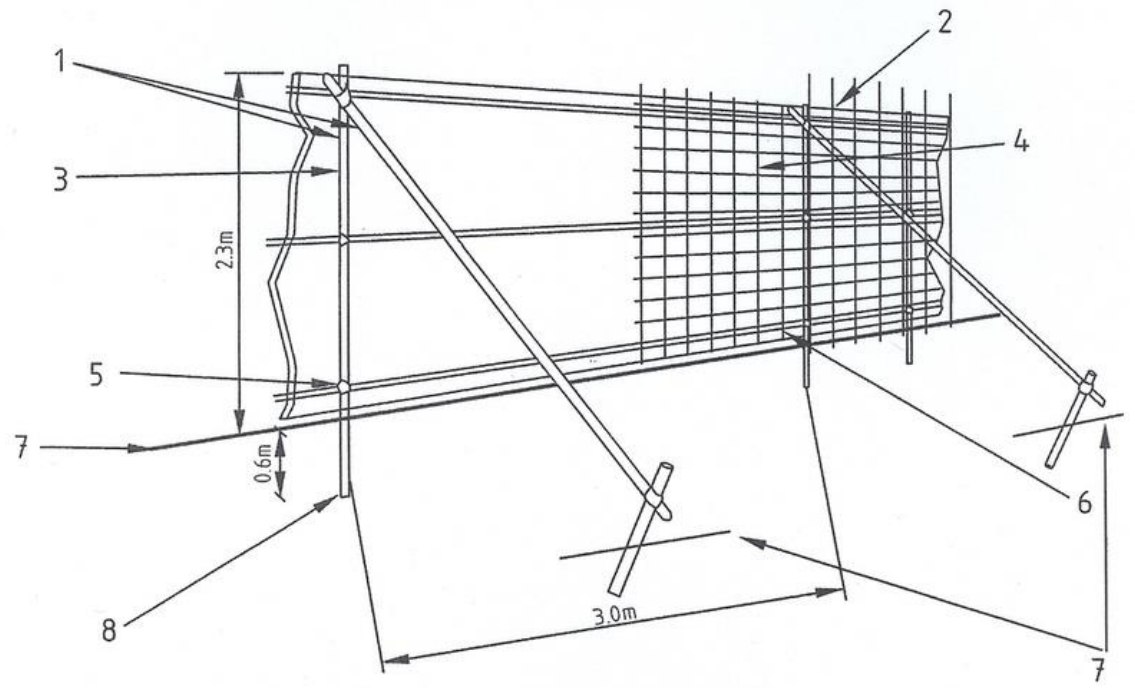

1 Standard scaffold poles
2 Uprights to be driven into the ground
3 Panels secured to uprights with wire ties and, where necessary, standard scaffold clamps
4 Weldmesh wired to the uprights and horizontals
5 Standard clamps
6 Wire twisted and secured on inside face of fencing to avoid easy dismantling
7 Ground level
8 Approx. 0.6m driven into the ground

Figure 2. – Protective fencing for RPA

On site examples of appropriate tree protection fencing installed as recommended within BS5837

Tree protection area warning sign

1.0 Scope of this report

1.1 I have been commissioned to produce base line survey data for trees, with a view to identifying constraints and opportunities for sustainable tree cover in the context of the development proposal for the site. The survey has been undertaken in accordance with British Standard 5837:2012 'Trees in relation to design, demolition and construction - Recommendations' and was made in the context of the site's current usage.

1.2 This report comprises the prerequisite information for the planning process recommended in BS 5837:2012

- The production of a Tree Survey
- The production of an Arboricultural Impact Assessment
- The production of a Tree Protection Plan if required.
- The production of an Arboricultural Method Statement, if required.

1.3 The tree locations and canopy spreads are plotted on the indicative plans at Appendix A.

1.4 A detailed condition survey or hazard assessment of each tree has not been undertaken within the scope of this report. If a tree was noted as being in such a condition as to require more detailed assessment, then that observation is included in the tree survey notes at Appendix B.

1.5 The findings within this report have been made on the basis of evidence seen on the day of inspection. It should be understood that some indications of tree hazard, such as leaf appearance and density, fungal fruiting bodies, and specific pests and diseases, are only visible at specific times of the year. Should significant additional information become apparent following the submission of this report I would reserve the right to modify the conclusion made accordingly.

1.6 This report is valid until:

- The re-inspection dates given for any tree in the survey schedule
- An episode of adverse weather conditions - for example winds over land measured at Beaufort scale force 8 or above.
- For two years from the date of inspection.

Whenever any of the above occurs first, the trees must be re-inspected, and any recommendations carried out. The presence of a hazard, the probability of harm and the value of the target area all help to determine the frequency of re-inspection.

1.7 Some trees are protected in law. Prior to any works to trees being undertaken a check should be made with the relevant Local Authority to ensure that prior permission is not required with regard to Tree Preservation Orders (TPOs), Conservation Areas (CAs) or planning conditions that may affect the site or its trees.

1.8 Works to trees can also be regulated because of the risk of harming wildlife which may live on, or around them. Wild birds and bats are protected under the Wildlife and Countryside Act (1981) for example, and it is an offence to knowingly disturb their nests or roosts, while works to trees in proximity to badger setts may require a license.

1.9 Any tree works should be undertaken in accordance with British Standard 3998:2010 'Tree work - Recommendations'.

1.10 If hard surfacing needs to be installed close to trees the principles prescribed in BS 5837:2012 and modified specifications contained within Arboricultural Practice Note 12, 'Through the Trees to Development,' should be adopted.

1.11 My expertise is within the field of arboriculture and this report is limited to the arboricultural aspects of the site only. Any comments made with regard to other matters are from a lay person's point of view.

2.0 Survey method

2.1 Each tree was inspected from ground level, noting only external features and defects. The Visual Tree Assessment (VTA) method was used to carry out the tree survey; this is an industry standard, best practice method for assessing the health, stability and, to some degree, the amenity of urban trees. A tree may be physiologically healthy, with vigorous growth, but also exhibit mechanical defects and therefore be structurally weak, consequently presenting a risk. VTA involves an assessment of each tree's physiological and structural condition. It is carried out from ground level, with the aid of binoculars as necessary.

2.2 No climbing inspection was made of the crown, no excavation was made of the root system, and no specific decay detection equipment was used.

2.3 The following instruments were available to carry out the inspection:

- Diameter tape – To measure stem diameters
- Nylon headed mallet – To sound trees for audible indications of decay
- Steel probe – To indicate the presence and extent of cavities
- Binoculars – To visually inspect above ground parts of the tree

2.4 No soil samples were taken, and no tissue samples were collected.

2.5 The following publications have been used to inform this survey, and the recommendations which follow from it:

1. British Standard 5837:2012
   'Trees in relation to design, demolition and construction – Recommendations.'

2. British Standard 3998:2010 'Tree work - Recommendations.'

3. 'Diagnosis of ill-health in trees' by R.G. Strouts and T.G. Winter.
   DoE booklet Research for Amenity Trees No. 2, 1994.

4. 'The body language of trees - A handbook for failure analysis'
   by C. Mattheck and H. Breloer.
   DoE booklet Research for Amenity Trees No. 4, 1994.