33
004

WINDOW TYPE 004

Window Type

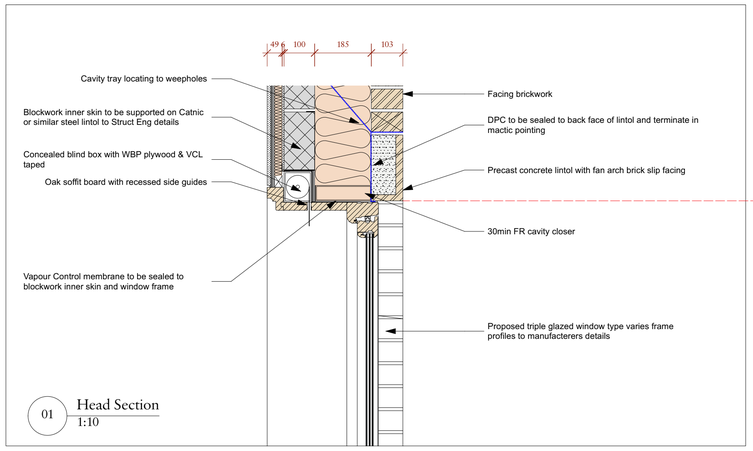

01 Head Section
1:10

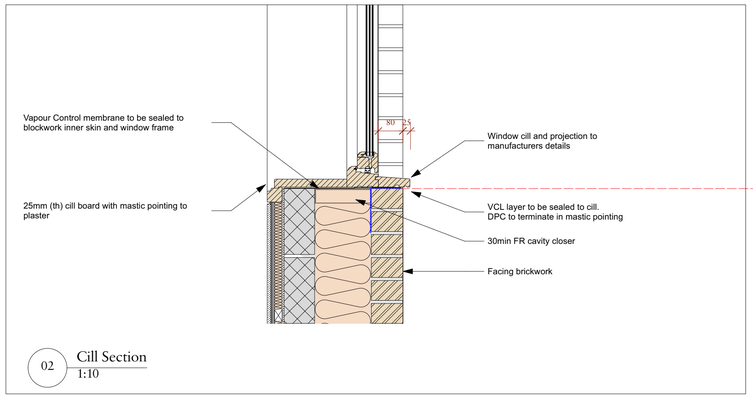

02 Cill Section
1:10

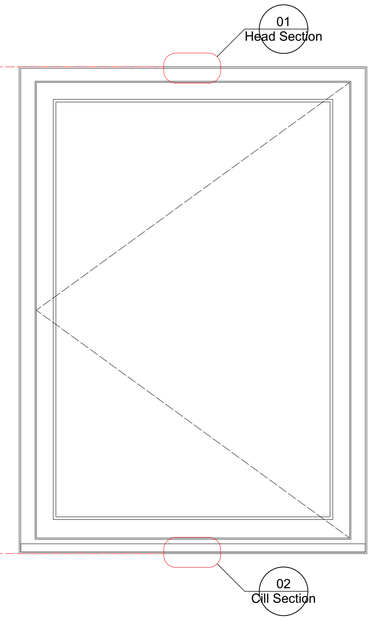

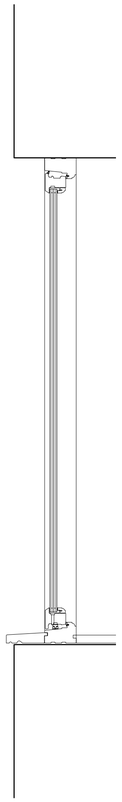

Timber framed, decorated

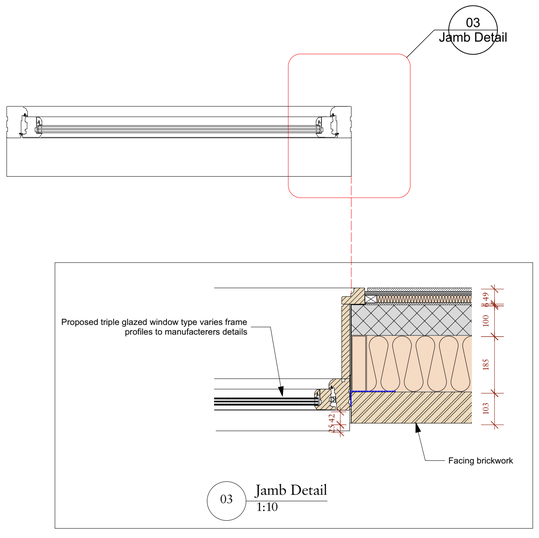

03 Jamb Detail
1:10

Rev	Date	Details	By
A	15/03/2024	Details added	VV

Charlton Brown
Architecture & Interiors

The Belvedere, 2 Back Lane, Hampstead, London, NW3 1HL

Telephone +44(0)20 7794 1234
Email office@charltonbrown.com
Website www.charltonbrown.com

Client
Alistair & Paula Flutter

Project
11 View Road, N6 4DJ

Drawing Title
Window Type 004

Date	Drawn	Checked
31/10/2023	LS	

Scale
1:10@A1

Issue Status
Planning

Project Number	Drawing Number	Revision
20055	PL-33-004	A