Multi model application Air Conditioning Technical Data

2MXM-A9

2MXM40A2V1B9
2MXM50A2V1B9
2MXM68A2V1B9

EEDEN23

TABLE OF CONTENTS

2MXM-A9

1	Features	4
	2MXM-A9	4
2	Specifications	5
3	Electrical data	7
4	Combination table	9
5	Capacity tables	12
	Capacity Table Legend	12
6	Dimensional drawings	13
7	Centre of gravity	15
8	Piping diagrams	17
9	Wiring diagrams	19
	Wiring Diagrams - Single Phase	19
10	Sound data	21
	Sound Pressure Spectrum	21
11	Operation range	23

1 Features

1 - 1 2MXM-A9

- New design outlook for outdoor unit
- Seasonal efficiency values up to A+++ in cooling and A++ in heating thanks to its up-to-date technology and built-in intelligence
- Up to 2 indoor units can be connected to 1 multi outdoor unit; all indoor units are individually controllable and do not need to be installed in the same room or at the same time. They operate simultaneously within the same heating or cooling mode.
- Choosing for an R-32 product, reduces the environmental impact with 68% compared to R-410A and leads directly to lower energy consumption thanks to its high energy efficiency
- Different types of indoor units can be connected: e.g. wall mounted, ceiling mounted cassette corner, concealed ceiling unit
- Outdoor units are fitted with a swing compressor, renowned for its low noise and high energy efficiency

INVERTER

Inverter

2 Specifications

2 - 1 Specifications

Technical specifications					2MXM40A9	2MXM50A9	2MXM68A9
Casing	Colour				Ivory white		
Dimensions	Unit	Height		mm	552		734
		Width		mm	852		974
		Depth		mm	350		408
	Packed unit	Height		mm	612		820
		Width		mm	906		1,050
		Depth		mm	402		480
Weight	Unit			kg	36	41	60
	Packed unit			kg	39	44	66
Heat exchanger	Length			mm	805	810	920
	Rows	Quantity			2		
	Fin pitch			mm	1.50		1.40
	Stages	Quantity			24		32
	Passes	Quantity			3.00		6.00
	Tube type				7.0 Hi-XD	8.1 Hi-XA	Hi-XA
	Tube diameter			mm	7.0	8.1	8.0
	Fin	Type			WH fin		WHS8 FIN-HYDROPHILIC
		Treatment			Anti-corrosion treatment		
Fan	Type				Propeller fan		
	Discharge direction				Horizontal		
	Quantity				1		
	Air flow rate	Cooling	High	m^3/min	36.0	37.0	46.5
				cfm	1,271	1,306	1,642
			Medium	m^3/min	33.0	34.0	42.5
				cfm	1,165	1,200	1,501
			Low	m^3/min	20.0		24.1
				cfm	706		851
		Heating	High	m^3/min	32.0	34.0	43.8
				cfm	1,130	1,200	1,547
			Medium	m^3/min	32.0	34.0	43.8
				cfm	1,130	1,200	1,547
			Low	m^3/min	18.0	22.0	16.1
				cfm	636	777	569
Fan motor	Quantity				1		
	Model				LFD-280-23-8F		D55F-31
	Output			W	50		55
Fan motor	Speed	Cooling	High	rpm	900	950	760
			Medium	rpm	840	890	700
			Low	rpm	500		420
		Heating	High	rpm	820	890	720
			Low	rpm	320	500	300
			Medium	rpm	820	890	720
Compressor	Quantity				1		
	Model				1YC25GXD#C	2YC40JXD#C	2YC71DXD#C
	Oil Amount			cm^3	375	650	900
	Type				Hermetically sealed swing compressor		
	Output			W	800	1,300	2,400
	Oil Type				FW68DA		
Operation range	Cooling	Ambient	Min.	°CDB	-10		
			Max.	°CDB	46		
	Heating	Ambient	Min.	°CDB	-15		
			Max.	°CDB	24		
Sound power level	Cooling	Max		dBA	62		63
		Night quiet mode		dBA	57	58	59
		Tonal adjustment		dBA	0		
	Heating	Max		dBA	62		63
		Nom.		dBA	62		61
		Night quiet mode		dBA	57	58	59
		Tonal adjustment		dBA	0		
Sound power level - Low sound mode (Stb. 2020, 189)	Cooling	Max.		dBA	60		61
		Night quiet mode		dBA	55		58
		Tonal adjustment		dBA	0		
	Heating	Max.		dBA	60		61
		Night quiet mode		dBA	55		58
		Tonal adjustment		dBA	0		
Sound pressure level	Cooling	Nom.		dBA	46	48	
	Heating	Nom.		dBA	48	50	48
Refrigerant	Type				R-32		
	Charge			kg	0.88	1.15	2.00
	Control				Expansion valve		
	GWP				675		

2 Specifications

2 - 1 Specifications

Technical specifications					2MXM40A9	2MXM50A9	2MXM68A9
Piping connections	Liquid	Quantity			2		
		OD		mm	6.35		
Piping connections	Gas	Quantity			2	1	
		OD		mm	9.5		
	Drain	Quantity			1		
		OD		mm	16 (inner diameter of connecting hose)		
	Gas 2	Quantity			-	1	
		OD		mm	-	12.7	
	Piping length	OU - IU	Min.	m	3 (1)		
			Max.	m	20 (1)		25 (1)
		System	Chargeless	m	20		30
	Additional refrigerant charge			kg/m	0.02 (for piping length exceeding 20m)		0.02 (for piping length exceeding 30m)
	Level difference	IU - OU	Max.	m	15		
		IU - IU		m	7.5		
	Heat insulation				Both liquid and gas pipes		
	Total piping length	System	Actual	m	30		50
Capacity control	Method				Variable (inverter)		

Standard accessories: Installation manual;Quantity: 1;

Standard accessories: Screw bag;Quantity: 1;

Standard accessories: Drain plug;Quantity: 1;

Standard accessories: Reducer assembly;Quantity: 1;

Standard accessories: Drain cap (1);Quantity: 6;

Standard accessories: Drain cap (2);Quantity: 3;

Electrical specifications				2MXM40A9	2MXM50A9	2MXM68A9
Power supply	Phase			1~		
	Frequency		Hz	50		
	Voltage		V	220-240		
Wiring connections	For power supply	Quantity		3		
		Remark		Earth wire included		
	For connection with indoor	Quantity		4		
		Remark		Earth wire included		
Current - 50Hz	Maximum fuse amps (MFA)		A	16		20

(1)For one room |
For combination with CVXM-A, FVXM-A - maximum piping length is 30m. |
See separate drawing for operation range |
See separate drawing for electrical data |
Contains fluorinated greenhouse gases

3 Electrical data

3 - 1 Electrical Data

2MXM40-50A9

Outdoor unit	Power supply			·RA· indoor units (·10·% safety factor) See note ·5·.		Other indoor units (·10·% safety factor)		Compressor		Outdoor fan motor	
Model name	Hz	Voltage	Voltage range	MCA	MFA	MCA	MFA	RHz	RLA	kW	FLA
2MXM40M3V1B 2MXM40M4V1B 2MXM40N2V1B 2MXM40A2V1B 2MXM40A2V1B9	50	220	Maximum ·50·Hz ·264·V	9,80	16	9,80	16	-	5,1	0,040	0,17
	50	230							5,3		
	50	240	Minimum ·50·Hz ·198·V						5,6		
2MXM50M2V1B9 2MXM50M3V1B9 2MXM50N2V1B 2MXM50A2V1B 2MXM50A2V1B9	50	220	Maximum ·50·Hz ·264·V	12,94	16	13,27	16	-	5,9	0,042	0,18
	50	230							6,2		
	50	240	Minimum ·50·Hz ·198·V						6,5		
2AMXM40M3V1B 2AMXM40M4V1B	50	220	Maximum ·50·Hz ·264·V	9,80	16	9,80	16	-	5,1	0,040	0,17
	50	230							5,3		
	50	240	Minimum ·50·Hz ·198·V						5,6		
2AMXM50M3V1B 2AMXM50M4V1B	50	220	Maximum ·50·Hz ·264·V	12,94	16	13,27	16	-	5,9	0,042	0,18
	50	230							6,2		
	50	240	Minimum ·50·Hz ·198·V						6,5		
2AMXF40A2V1B	50	220	Maximum ·50·Hz ·264·V	9,80	16	9,80	16	-	5,1	0,040	0,17
	50	230							5,3		
	50	240	Minimum ·50·Hz ·198·V						5,6		
2AMXF50A2V1B	50	220	Maximum ·50·Hz ·264·V	12,83	16	12,83	16	-	5,9	0,042	0,18
	50	230							6,2		
	50	240	Minimum ·50·Hz ·198·V						6,5		
2MXF40A2V1B	50	220	Maximum ·50·Hz ·264·V	9,80	16	9,80	16	-	5,1	0,040	0,17
	50	230							5,3		
	50	240	Minimum ·50·Hz ·198·V						5,6		
2MXF50A2V1B	50	220	Maximum ·50·Hz ·264·V	12,83	16	12,83	16	-	5,9	0,042	0,18
	50	230							6,2		
	50	240	Minimum ·50·Hz ·198·V						6,5		

Notes
1) The ·RLA· is based on the following conditions.
Outdoor temperature ·35·°C DB
Indoor temperature ·27·°C DB / ·19·°C WB
2) Select the wire size according to the MCA.
3) The maximum allowable voltage that is unbalanced between phases is ·2·%.
4) Use a circuit breaker instead of a fuse.
5) Only for wall-mounted ·FVXM· units

Symbols
MCA: Minimum Circuit Ampere [A]
MFA: Maximum Fuse Ampere [A]
RLA: Rated load amps [A]
OFM: Outdoor fan motor
MSC: Maximum starting current
FLA: Full Load Ampere [A]
kW: Fan motor rated output [kW]

3D110207G

3 Electrical data

3 - 1 Electrical Data

2MXM68A9
3MXM-A9
4MXM-A9
5MXM-A9

Outdoor unit	Power supply			·RA· indoor units (·10·% safety factor) See note ·5·.		Other indoor units (·10·% safety factor)		Compressor		Outdoor fan motor	
Model name	Hz	Voltage	Voltage range	MCA	MFA	MCA	MFA	RHz	RLA	kW	FLA
2MXM68N2V1B	50	220	Maximum ·50·Hz ·264·V	16,94	20	19,80	20	-	7,8	0,056	0,37
2MXM68A2V1B	50	230							7,5		
2MXM68A2V1B9	50	240	Minimum ·50·Hz ·198·V						8,7		
3MXM40N2V1B9	50	220	Maximum ·50·Hz ·264·V	14,31	16	15,97	16	-	2,9	0,056	0,37
	50	230							3,0		
	50	240	Minimum ·50·Hz ·198·V						3,1		
3MXM52N2V1B9	50	220	Maximum ·50·Hz ·264·V	14,59	20	16,27	20	-	4,5	0,056	0,37
	50	230							4,7		
	50	240	Minimum ·50·Hz ·198·V						4,9		
3MXM68N2V1B9	50	220	Maximum ·50·Hz ·264·V	17,19	20	19,81	20	-	8,0	0,056	0,37
3MXM68A2V1B	50	230							8,4		
3MXM68A2V1B9	50	240	Minimum ·50·Hz ·198·V						8,7		
4MXM68N2V1B9	50	220	Maximum ·50·Hz ·264·V	17,36	20	19,81	20	-	7,0	0,056	0,37
4MXM68A2V1B	50	230							7,3		
4MXM68A2V1B9	50	240	Minimum ·50·Hz ·198·V						7,6		
4MXM80N2V1B9	50	220	Maximum ·50·Hz ·264·V	17,04	25	20,36	25	-	8,5	0,075	0,50
4MXM80A2V1B	50	230							8,9		
4MXM80A2V1B9	50	240	Minimum ·50·Hz ·198·V						9,3		
5MXM90N2V1B9	50	220	Maximum ·50·Hz ·264·V	21,70	32	25,88	32	-	9,2	0,075	0,50
5MXM90A2V1B	50	230							9,6		
5MXM90A2V1B9	50	240	Minimum ·50·Hz ·198·V						10,0		
3AMXM52N2V1B9	50	220	Maximum ·50·Hz ·264·V	18,19	20	16,27	20	-	4,5	0,056	0,37
	50	230							4,7		
	50	240	Minimum ·50·Hz ·198·V						4,9		
3MXF52A2V1B9	50	220	Maximum ·50·Hz ·264·V	14,59	20	16,27	20	-	4,5	0,056	0,37
	50	230							4,7		
	50	240	Minimum ·50·Hz ·198·V						4,9		
3AMXF52A2V1B9	50	220	Maximum ·50·Hz ·264·V	14,59	20	16,27	20	-	4,5	0,056	0,37
	50	230							4,7		
	50	240	Minimum ·50·Hz ·198·V						4,9		
3MXF68A2V1B9	50	220	Maximum ·50·Hz ·264·V	17,19	20	19,81	20	-	8,0	0,056	0,37
	50	230							8,4		
	50	240	Minimum ·50·Hz ·198·V						8,7		
3MXM40N2V1B8	50	220	Maximum ·50·Hz ·264·V	14,31	16	15,97	16	-	2,9	0,056	0,37
3MXM40A2V1B	50	230							3,0		
3MXM40A2V1B9	50	240	Minimum ·50·Hz ·198·V						3,1		
3MXM52N2V1B8	50	220	Maximum ·50·Hz ·264·V	14,59	20	16,27	20	-	4,5	0,056	0,37
3MXM52A2V1B	50	230							4,7		
3MXM52A2V1B9	50	240	Minimum ·50·Hz ·198·V						4,9		

Notes
1) The ·RLA· is based on the following conditions.
   Outdoor temperature ·35·°C DB
   Indoor temperature ·27·°C DB / ·19·°C WB
2) Select the wire size according to the MCA.
3) The maximum allowable voltage that is unbalanced between phases is ·2·%.
4) Use a circuit breaker instead of a fuse.
5) Only for wall-mounted ·FVXM· units

Symbols
MCA: Minimum Circuit Ampere [A]
MFA: Maximum Fuse Ampere [A]
RLA: Rated load amps [A]
OFM: Outdoor fan motor
MSC: Maximum starting current
FLA: Full Load Ampere [A]
kW: Fan motor rated output [kW]

3D129421D

4 Combination table

4 - 1 Combination Table

2MXM40A9

Cooling ·230V 50Hz·

Outdoor unit	Indoor unit	Cooling capacity [kW]		Total capacity [kW]			Power input [kW]			Total current [A]			Power factor [%]
		Room ·A·	Room ·B·	Minimum	Nominal	Maximum	Minimum	Nominal	Maximum	Minimum	Nominal	Maximum	
2MXM40M2V1B 2MXM40M3V1B 2MXM40M4V1B 2MXM40N2V1B 2MXM40N2V1B9 2MXM40A2V1B 2MXM40A2V1B9	1.5	1,50	-	1,30	1,50	2,00	0,33	0,31	0,40	1,78	1,70	2,17	79
	2.0	2,00	-	1,30	2,00	2,40	0,33	0,44	0,57	1,78	2,38	3,09	79
	2.5	2,50	-	1,30	2,50	3,00	0,33	0,61	0,80	1,78	3,33	4,40	79
	3.5	3,50	-	1,30	3,50	4,00	0,33	1,04	1,35	1,78	5,71	7,38	79
	1.5+1.5	1,50	1,50	1,50	3,00	3,60	0,31	0,60	0,73	1,67	3,33	4,00	79
	1.5+2.0	1,50	2,00	1,50	3,50	4,00	0,31	0,79	0,91	1,67	4,35	4,98	79
	1.5+2.5	1,50	2,50	1,50	4,00	4,20	0,31	0,98	1,03	1,67	5,37	5,64	79
	1.5+3.5	1,20	2,80	1,50	4,00	4,40	0,31	0,96	1,06	1,67	5,30	5,83	79
	2.0+2.0	2,00	2,00	1,50	4,00	4,20	0,31	0,97	1,02	1,67	5,34	5,61	79
	2.0+2.5	1,78	2,22	1,50	4,00	4,30	0,31	0,96	1,04	1,67	5,30	5,70	79
	2.0+3.5	1,45	2,55	1,50	4,00	4,50	0,31	0,95	1,08	1,67	5,25	5,91	79
	2.5+2.5	2,00	2,00	1,50	4,00	4,40	0,31	0,96	1,06	1,67	5,27	5,80	79
	2.5+3.5	1,67	2,33	1,50	4,00	4,60	0,31	0,94	1,09	1,67	5,20	5,98	79

Notes
1) The total capacity of each connected indoor unit is up to ·6·kW.
2) The values mentioned in this document are for connecting with the following indoor unit types:
·1.5, 2.0, 2.5, 3.5· kW class
Wall-mounted ·CTXA-AS, CTXA-AT, CTXA-AW, CTXA-BB, CTXA-BS, CTXA-BT, CTXM-M, CTXM-N, CTXM-R, FTXA-AS, FTXA-AT, FTXA-AW, FTXA-BB, FTXA-BS, FTXA-BT, FTXM-M, FTXM-N, FTXM-R, FTXJ-AB, FTXJ-AS, FTXJ-AW· series
3) Cooling capacity conditions
Indoor temperature ·27·°C DB / ·19·°C WB
Outdoor temperature ·35·°C DB
4) For additional information on the connection of the DHW generator for Multi and the Hybrid for Multi, see ·3D106169·.

4D139784B

2MXM40A9

Heating ·230V 50Hz·

Outdoor unit	Indoor unit	Heating capacity [kW]		Total capacity [kW]			Power input [kW]			Total current [A]			Power factor [%]
		Room ·A·	Room ·B·	Minimum	Nominal	Maximum	Minimum	Nominal	Maximum	Minimum	Nominal	Maximum	
2MXM40M2V1B 2MXM40M3V1B 2MXM40M4V1B 2MXM40N2V1B 2MXM40N2V1B9 2MXM40A2V1B 2MXM40A2V1B9	1,5	2,00	-	1,00	2,00	3,30	0,26	0,68	1,04	1,43	3,66	5,69	79
	2,0	2,70	-	1,00	2,70	3,70	0,26	0,75	1,24	1,43	4,11	6,78	79
	2,5	3,40	-	1,00	3,40	4,10	0,26	1,02	1,48	1,43	5,59	8,09	79
	3,5	3,80	-	1,00	3,80	4,40	0,26	1,28	1,71	1,43	7,02	9,40	79
	1.5+1.5	1,75	1,75	1,20	3,50	4,30	0,24	0,80	0,99	1,31	4,43	5,45	79
	1.5+2.0	1,63	2,17	1,20	3,80	4,50	0,24	0,88	1,04	1,31	4,85	5,75	79
	1.5+2.5	1,58	2,63	1,20	4,20	4,60	0,24	1,00	1,10	1,31	5,53	6,06	79
	1.5+3.5	1,26	2,94	1,20	4,20	4,70	0,24	0,96	1,12	1,31	5,29	5,92	79
	2.0+2.0	2,10	2,10	1,20	4,20	4,60	0,22	0,98	1,08	1,21	5,41	5,93	79
	2.0+2.5	1,87	2,33	1,20	4,20	4,70	0,22	0,97	1,09	1,21	5,36	6,00	79
	2.0+3.5	1,53	2,67	1,20	4,20	4,80	0,22	0,95	1,09	1,21	5,25	6,00	79
	2.5+2.5	2,10	2,10	1,20	4,20	4,70	0,22	0,96	1,08	1,21	5,29	5,92	79
	2.5+3.5	1,75	2,45	1,20	4,20	4,80	0,22	0,94	1,08	1,21	5,19	5,94	79

Notes
1) The total capacity of each connected indoor unit is up to ·6·kW.
2) The values mentioned in this document are for connecting with the following indoor unit types:
·1.5, 2.0, 2.5, 3.5· kW class
Wall-mounted ·CTXA-AS, CTXA-AT, CTXA-AW, CTXA-BB, CTXA-BS, CTXA-BT, CTXM-M, CTXM-N, CTXM-R, FTXA-AS, FTXA-AT, FTXA-AW, FTXA-BB, FTXA-BS, FTXA-BT, FTXM-M, FTXM-N, FTXM-R, FTXJ-AB, FTXJ-AS, FTXJ-AW· series
3) Heating capacity conditions
Indoor temperature ·20·°C DB
Outdoor temperature ·7·°C DB / ·6·°C WB
4) For additional information on the connection of the DHW generator for Multi and the Hybrid for Multi, see ·3D106169·.

4D139786B

4 Combination table

4 - 1 Combination Table

2MXM50A9

Cooling ·230V 50Hz·

Outdoor unit	Indoor unit	Cooling capacity [kW]		Total capacity [kW]			Power input [kW]			Total current [A]			Power factor [%]
		Room ·A·	Room ·B·	Minimum	Nominal	Maximum	Minimum	Nominal	Maximum	Minimum	Nominal	Maximum	
2MXM50M2V1B 2MXM50M2V1B9 2MXM50M3V1B9 2MXM50N2V1B 2MXM50N2V1B9 2MXM50A2V1B 2MXM50A2V1B9	1.5	1,50	-	1,40	1,50	2,20	0,31	0,32	0,52	1,53	1,55	2,53	89
	2.0	2,00	-	1,40	2,00	2,90	0,31	0,47	0,77	1,53	2,25	3,76	89
	2.5	2,50	-	1,40	2,50	3,10	0,31	0,67	0,92	1,53	3,27	4,50	89
	3.5	3,50	-	1,40	3,50	4,10	0,31	1,09	1,46	1,53	5,32	7,13	89
	4.2	4,20	-	1,40	4,20	4,70	0,31	1,59	1,75	1,53	7,73	8,57	89
	5.0	5,00	-	1,60	5,00	5,30	0,33	1,30	1,44	1,64	6,33	7,01	89
	1.5+1.5	1,50	1,50	1,60	3,00	4,20	0,33	0,62	0,87	1,64	3,03	4,25	89
	1.5+2.0	1,50	2,00	1,60	3,50	4,20	0,33	0,76	0,91	1,64	3,71	4,46	89
	1.5+2.5	1,50	2,50	1,60	4,00	4,20	0,33	0,94	0,99	1,64	4,60	4,83	89
	1.5+3.5	1,50	3,50	1,60	5,00	5,00	0,33	1,25	1,25	1,64	6,10	6,10	89
	1.5+4.2	1,32	3,68	1,60	5,00	5,40	0,33	1,23	1,54	1,64	6,04	6,53	89
	1.5+5.0	1,15	3,85	1,80	5,00	5,50	0,33	1,23	1,68	1,64	5,99	6,59	89
	2.0+2.0	2,00	2,00	1,80	4,00	5,00	0,33	0,94	1,28	1,64	4,60	5,75	89
	2.0+2.5	2,00	2,50	1,80	4,50	5,10	0,33	1,07	1,31	1,64	5,23	5,93	89
	2.0+3.5	1,82	3,18	1,80	5,00	5,40	0,33	1,24	1,49	1,64	6,05	6,54	89
	2.0+4.2	1,61	3,39	1,80	5,00	5,50	0,33	1,23	1,51	1,64	6,01	6,62	89
	2.0+5.0	1,43	3,57	1,80	5,00	5,50	0,33	1,22	1,44	1,64	5,95	6,55	89
	2.5+2.5	2,50	2,50	1,80	5,00	5,30	0,33	1,25	1,42	1,64	6,10	6,47	89
	2.5+3.5	2,08	2,92	1,80	5,00	5,40	0,33	1,23	1,43	1,64	6,02	6,51	89
	2.5+4.2	1,87	3,13	1,80	5,00	5,50	0,33	1,22	1,45	1,64	5,98	6,58	89
	2.5+5.0	1,67	3,33	1,80	5,00	5,50	0,33	1,21	1,38	1,64	5,92	6,52	89
	3.5+3.5	2,50	2,50	1,80	5,00	5,40	0,33	1,22	1,42	1,64	5,95	6,43	89
	3.5+4.2	2,27	2,73	1,80	5,00	5,50	0,33	1,21	1,40	1,64	5,90	6,49	89
	3.5+5.0	2,06	2,94	1,80	5,00	5,50	0,33	1,20	1,34	1,64	5,85	6,44	89
	4.2+4.2	2,50	2,50	1,80	5,00	5,50	0,33	1,20	1,38	1,64	5,88	6,47	89

Notes
1) The total capacity of each connected indoor unit is up to ·8.5·kW.
2) The values mentioned in this document are for connecting with the following indoor unit types:
·1.5, 2.0, 2.5, 3.5, 4.2, 5.0· kW class
Wall-mounted ·CTXA-AS, CTXA-AT, CTXA-AW, CTXA-BB, CTXA-BS, CTXA-BT, CTXM-M, CTXM-N, CTXM-R, FTXA-AS, FTXA-AT, FTXA-AW, FTXA-BB, FTXA-BS, FTXA-BT, FTXM-M, FTXM-N, FTXM-R, FTXJ-AB, FTXJ-AS, FTXJ-AW· series
3) Cooling capacity conditions
Indoor temperature ·27·°C DB / ·19·°C WB
Outdoor temperature ·35·°C DB
4) For additional information on the connection of the DHW generator for Multi and the Hybrid for Multi, see ·3D106169·.

4D139787B

2MXM50A9

Heating ·230V 50Hz·

Outdoor unit	Indoor unit	Heating capacity [kW]		Total capacity [kW]			Power input [kW]			Total current [A]			Power factor [%]
		Room ·A·	Room ·B·	Minimum	Nominal	Maximum	Minimum	Nominal	Maximum	Minimum	Nominal	Maximum	
2MXM50M2V1B 2MXM50M2V1B9 2MXM50M3V1B9 2MXM50N2V1B 2MXM50N2V1B9 2MXM50A2V1B 2MXM50A2V1B9	1.5	2,30	-	1,10	2,30	3,30	0,29	0,78	0,95	1,44	3,82	4,66	89
	2.0	3,00	-	1,10	3,00	3,70	0,27	0,82	1,13	1,33	3,99	5,52	89
	2.5	3,40	-	1,10	3,40	4,10	0,25	0,99	1,34	1,23	4,81	6,54	89
	3.5	4,20	-	1,10	4,20	4,80	0,25	1,30	1,60	1,23	6,36	7,80	89
	4.2	4,60	-	1,10	4,60	5,00	0,23	1,49	1,81	1,12	7,27	8,85	89
	5.0	5,50	-	1,20	5,50	5,60	0,23	1,35	1,51	1,12	6,56	9,01	89
	1.5+1.5	1,80	1,80	1,20	3,60	5,00	0,23	0,79	1,09	1,12	3,84	5,34	89
	1.5+2.0	1,67	2,23	1,20	3,90	5,00	0,23	0,90	1,16	1,12	4,40	5,65	89
	1.5+2.5	1,69	2,81	1,20	4,50	5,19	0,23	1,10	1,27	1,12	5,39	6,22	89
	1.5+3.5	1,56	3,64	1,20	5,20	5,70	0,25	1,28	1,40	1,23	6,25	6,86	89
	1.5+4.2	1,47	4,13	1,20	5,60	5,96	0,25	1,37	1,46	1,23	6,71	7,15	89
	1.5+5.0	1,29	4,31	1,20	5,60	6,16	0,25	1,37	1,50	1,23	6,68	7,35	89
	2.0+2.0	2,35	2,35	1,20	4,70	5,70	0,23	1,15	1,40	1,12	5,61	6,82	89
	2.0+2.5	2,27	2,83	1,20	5,10	5,80	0,23	1,24	1,42	1,12	6,08	6,92	89
	2.0+3.5	2,04	3,56	1,20	5,60	5,90	0,25	1,36	1,43	1,23	6,65	7,01	89
	2.0+4.2	1,81	3,79	1,20	5,60	6,00	0,25	1,36	1,46	1,23	6,63	7,11	89
	2.0+5.0	1,60	4,00	1,20	5,60	6,20	0,25	1,35	1,50	1,23	6,60	7,31	89
	2.5+2.5	2,80	2,80	1,20	5,60	5,80	0,23	1,37	1,42	1,12	6,71	6,95	89
	2.5+3.5	2,33	3,27	1,20	5,60	6,00	0,25	1,38	1,48	1,23	6,76	7,25	89
	2.5+4.2	2,09	3,51	1,20	5,60	6,10	0,25	1,39	1,51	1,23	6,79	7,40	89
	2.5+5.0	1,87	3,73	1,30	5,60	6,30	0,25	1,41	1,58	1,23	6,88	7,74	89
	3.5+3.5	2,80	2,80	1,30	5,60	6,10	0,25	1,40	1,52	1,23	6,83	7,44	89
	3.5+4.2	2,55	3,05	1,30	5,60	6,20	0,25	1,40	1,55	1,23	6,84	7,58	89
	3.5+5.0	2,31	3,29	1,30	5,60	6,40	0,25	1,42	1,63	1,23	6,95	7,95	89
	4.2+4.2	2,80	2,80	1,30	5,60	6,30	0,25	1,41	1,58	1,23	6,88	7,74	89

Notes
1) The total capacity of each connected indoor unit is up to ·8.5·kW.
2) The values mentioned in this document are for connecting with the following indoor unit types:
·1.5, 2.0, 2.5, 3.5, 4.2, 5.0· kW class
Wall-mounted ·CTXA-AS, CTXA-AT, CTXA-AW, CTXA-BB, CTXA-BS, CTXA-BT, CTXM-M, CTXM-N, CTXM-R, FTXA-AS, FTXA-AT, FTXA-AW, FTXA-BB, FTXA-BS, FTXA-BT, FTXM-M, FTXM-N, FTXM-R, FTXJ-AB, FTXJ-AS, FTXJ-AW· series
3) Heating capacity conditions
Indoor temperature ·20·°C DB
Outdoor temperature ·7·°C DB / ·6·°C WB
4) For additional information on the connection of the DHW generator for Multi and the Hybrid for Multi, see ·3D106169·.

4D139795B

4 Combination table

4 - 1 Combination Table

2MXM68A9

Cooling ·230V 50Hz·

Outdoor unit	Indoor unit	Cooling capacity [kW]		Total capacity [kW]			Power input [kW]			Total current [A]			Power factor [%]
		Room ·A·	Room ·B·	Minimum	Nominal	Maximum	Minimum	Nominal	Maximum	Minimum	Nominal	Maximum	
2MXM68N2V1B 2MXM68A2V1B 2MXM68A2V1B9	1.5	1,60	---	1,52	1,60	2,49	0,40	0,42	0,59	1,82	1,98	2,71	95
	2.0	2,00	---	1,65	2,00	3,00	0,41	0,43	0,67	1,89	2,08	3,08	95
	2.5	2,50	---	1,74	2,50	3,44	0,44	0,44	0,82	2,00	2,62	3,77	95
	3.5	3,50	---	1,93	3,50	4,86	0,46	0,46	1,43	2,09	3,84	6,53	95
	4.2	4,20	---	1,93	4,20	5,33	0,46	0,46	1,43	2,09	3,93	6,56	95
	5.0	5,00	---	1,94	5,00	6,03	0,44	0,44	2,13	2,00	7,20	9,77	95
	6.0	6,00	---	1,94	6,00	6,51	0,44	0,44	2,13	2,00	7,29	9,77	95
	1.5+1.5	1,50	1,50	1,95	3,00	4,79	0,40	0,51	1,15	1,81	2,34	5,25	95
	1.5+2.0	1,50	2,00	1,95	3,50	4,96	0,40	0,62	1,22	1,81	2,84	5,58	95
	1.5+2.5	1,50	2,50	1,95	4,00	5,28	0,40	0,75	1,36	1,81	3,44	6,23	95
	1.5+3.5	1,50	3,50	1,95	5,00	6,17	0,39	1,04	1,83	1,77	4,76	8,39	95
	1.5+4.2	1,50	4,20	1,95	5,70	6,39	0,39	1,27	1,96	1,77	5,82	8,97	95
	1.5+5.0	1,50	5,00	1,95	6,50	7,08	0,38	1,50	2,23	1,73	6,87	10,22	95
	1.5+6.0	1,36	5,44	1,96	6,80	7,59	0,37	1,62	2,36	1,68	7,42	10,79	95
	2.0+2.0	2,00	2,00	1,95	4,00	5,12	0,40	0,75	1,29	1,81	3,44	5,91	95
	2.0+2.5	2,00	2,50	1,95	4,50	5,44	0,40	0,89	1,43	1,81	4,08	6,56	95
	2.0+3.5	2,00	3,50	1,95	5,50	6,30	0,39	1,17	1,91	1,77	5,36	8,76	95
	2.0+4.2	2,00	4,20	1,95	6,20	6,51	0,39	1,43	2,05	1,77	6,55	9,37	95
	2.0+5.0	1,94	4,86	1,95	6,80	7,26	0,38	1,59	2,36	1,73	7,28	10,79	95
	2.0+6.0	1,70	5,10	1,96	6,80	7,71	0,37	1,61	2,45	1,68	7,37	11,20	95
	2.5+2.5	2,50	2,50	1,95	5,00	6,10	0,41	1,01	1,78	1,89	4,63	8,15	95
	2.5+3.5	2,50	3,50	1,95	6,00	6,57	0,40	1,29	2,11	1,81	5,91	9,65	95
	2.5+4.2	2,50	4,20	1,95	6,70	6,95	0,40	1,51	2,38	1,81	6,92	10,88	95
	2.5+5.0	2,27	4,53	1,95	6,80	7,37	0,37	1,50	2,45	1,68	6,87	11,20	95
	2.5+6.0	2,00	4,80	1,96	6,80	7,71	0,35	1,48	2,45	1,60	6,78	11,20	95
	3.5+3.5	3,40	3,40	1,95	6,80	7,13	0,38	1,45	2,37	1,73	6,64	10,83	95
	3.5+4.2	3,09	3,71	1,95	6,80	7,24	0,38	1,45	2,46	1,73	6,64	11,24	95
	3.5+5.0	2,80	4,00	1,95	6,80	7,76	0,35	1,42	2,78	1,60	6,50	12,71	95
	3.5+6.0	2,51	4,29	2,26	6,80	8,07	0,40	1,40	2,72	1,81	6,41	12,46	95
	4.2+4.2*	3,40	3,40	1,95	6,80	7,14	0,38	1,44	2,37	1,73	6,60	10,83	95
	4.2+5.0*	3,10	3,70	1,95	6,80	7,77	0,35	1,41	2,78	1,60	6,46	12,71	95
	4.2+6.0*	2,80	4,00	2,26	6,80	8,08	0,40	1,40	2,72	1,81	6,41	12,46	95

Notes

1) The total capacity of each connected indoor unit is up to ·10.2·kW.
2) The values mentioned in this document are for connecting with the following indoor unit types:
   ·1.5, 2.0, 2.5, 3.5, 4.2, 5.0, 6.0· kW class
   Wall-mounted ·CTXA-AS, CTXA-AT, CTXA-AW, CTXA-BB, CTXA-BS, CTXA-BT, CTXM-M, CTXM-N, CTXM-R, FTXA-AS, FTXA-AT, FTXA-AW, FTXA-BB, FTXA-BS, FTXA-BT, FTXM-M, FTXM-N, FTXM-R, FTXJ-AB, FTXJ-AS, FTXJ-AW· series
   * Only for ·CTXM-R· and · · ·FTXM-R· series
3) Cooling capacity conditions
   Indoor temperature ·27·°C DB / ·19·°C WB
   Outdoor temperature ·35·°C DB
4) For additional information on the connection of the DHW generator for Multi and the Hybrid for Multi, see ·3D106169·.

4D139796B

2MXM68A9

Heating ·230V 50Hz·

Outdoor unit	Indoor unit	Heating capacity [kW]		Total capacity [kW]			Power input [kW]			Total current [A]			Power factor [%]
		Room ·A·	Room ·B·	Minimum	Nominal	Maximum	Minimum	Nominal	Maximum	Minimum	Nominal	Maximum	
2MXM68N2V1B 2MXM68A2V1B 2MXM68A2V1B9	1.5	2,70	---	1,20	2,70	4,08	0,34	0,72	1,22	1,55	3,35	5,59	95
	2.0	3,00	---	1,19	3,00	4,09	0,34	0,81	1,28	1,57	3,70	5,64	95
	2.5	3,40	-	1,22	3,40	4,30	0,35	1,02	1,37	1,61	4,72	6,08	95
	3.5	4,30	-	1,33	4,30	4,90	0,37	1,41	1,75	1,67	6,50	7,15	95
	4.2	4,90	-	1,44	4,90	5,70	0,40	1,58	2,04	1,82	7,25	7,15	95
	5.0	5,90	-	1,66	5,90	6,90	0,39	1,92	2,59	1,78	8,78	8,70	95
	6.0	7,20	-	1,88	7,20	8,91	0,37	2,39	2,64	1,69	10,94	12,08	95
	1.5+1.5	1,83	1,83	1,33	3,65	7,38	0,29	0,82	1,83	1,31	3,75	8,38	95
	1.5+2.0	1,76	2,34	1,39	4,10	7,76	0,30	0,94	1,99	1,37	4,31	9,09	95
	1.5+2.5	1,76	2,94	1,65	4,70	7,95	0,36	1,10	2,06	1,63	5,04	9,43	95
	1.5+3.5	1,77	4,13	1,80	5,90	8,50	0,37	1,45	2,35	1,68	6,61	10,74	95
	1.5+4.2	1,79	5,01	1,80	6,80	8,85	0,37	1,72	2,57	1,68	7,88	11,75	95
	1.5+5.0	1,80	6,00	2,18	7,80	10,38	0,45	2,03	2,91	2,06	9,27	13,31	95
	1.5+6.0	1,72	6,88	2,46	8,60	10,58	0,48	2,28	2,67	2,19	10,44	12,21	95
	2.0+2.0	2,40	2,40	1,65	4,80	7,95	0,36	1,01	2,31	1,63	4,63	9,47	95
	2.0+2.5	2,36	2,94	1,65	5,30	8,12	0,36	1,17	2,32	1,63	5,34	9,81	95
	2.0+3.5	2,36	4,14	1,80	6,50	8,67	0,37	1,52	2,43	1,68	6,94	11,12	95
	2.0+4.2	2,39	5,01	1,80	7,40	9,03	0,37	1,83	2,66	1,68	8,38	12,17	95
	2.0+5.0	2,37	5,93	2,18	8,30	10,56	0,45	2,18	3,00	2,06	9,98	13,73	95
	2.0+6.0	2,15	6,45	2,46	8,60	10,75	0,48	2,24	2,74	2,19	10,26	12,55	95
	2.5+2.5	2,95	2,95	1,65	5,90	8,49	0,36	1,33	2,36	1,63	6,08	10,78	95
	2.5+3.5	2,96	4,14	1,89	7,10	9,03	0,38	1,72	2,66	1,72	7,86	12,17	95
	2.5+4.2	2,99	5,01	1,89	8,00	9,29	0,38	2,03	2,82	1,72	9,31	12,93	95
	2.5+5.0	2,87	5,73	2,27	8,60	10,68	0,46	2,24	3,09	2,11	10,26	14,15	95
	2.5+6.0	2,53	6,07	2,55	8,60	10,88	0,50	2,22	2,77	2,28	10,17	12,67	95
	3.5+3.5	4,15	4,15	2,17	8,30	9,38	0,42	2,18	2,86	1,94	9,98	13,09	95
	3.5+4.2	3,91	4,69	2,17	8,60	9,47	0,42	2,26	2,91	1,94	10,35	13,31	95
	3.5+5.0	3,54	5,06	2,56	8,60	10,90	0,51	2,22	3,13	2,32	10,17	14,32	95
	3.5+6.0	3,17	5,43	2,74	8,60	11,01	0,52	2,21	2,76	2,37	10,12	12,63	95
	4.2+4.2*	4,30	4,30	2,17	8,60	9,56	0,42	2,22	2,94	1,94	10,17	13,47	95
	4.2+5.0*	3,93	4,67	2,56	8,60	10,91	0,51	2,21	3,19	2,32	10,12	14,61	95
	4.2+6.0*	3,54	5,06	2,74	8,60	11,02	0,51	2,20	2,79	2,32	10,07	12,76	95

Notes

1) The total capacity of each connected indoor unit is up to ·10.2·kW.
2) The values mentioned in this document are for connecting with the following indoor unit types:
   ·1.5, 2.0, 2.5, 3.5, 4.2, 5.0, 6.0· kW class
   Wall-mounted ·CTXA-AS, CTXA-AT, CTXA-AW, CTXA-BB, CTXA-BS, CTXA-BT, CTXM-M, CTXM-N, CTXM-R, FTXA-AS, FTXA-AT, FTXA-AW, FTXA-BB, FTXA-BS, FTXA-BT, FTXM-M, FTXM-N, FTXM-R, FTXJ-AB, FTXJ-AS, FTXJ-AW· series
   * Only for ·CTXM-R· and · · ·FTXM-R· series
3) Heating capacity conditions
   Indoor temperature ·20·°C DB
   Outdoor temperature ·7·°C DB / ·6·°C WB
4) For additional information on the connection of the DHW generator for Multi and the Hybrid for Multi, see ·3D106169·.

4D139798B

5 Capacity tables

5 - 1 Capacity Table Legend

5

In order to fulfill more your requirements on quick access of data in the format you require, we have developed a tool to consult capacity tables.

Below you can find the link to the capacity table database and an overview of all the tools we have to help you select the correct product:

- **Capacity table database:** lets you find back and export quickly the capacity information you are looking for based upon unit model, refrigerant temperature and connection ratio.
- You can access the capacity table viewer here:
  https://my.daikin.eu/content/denv/en_US/home/applications/software-finder/capacity-table-viewer.html

- An overview of **all software tools** that we offer can be found here:
  https://my.daikin.eu/denv/en_US/home/applications/software-finder.html

6 Dimensional drawings

6 - 1 Dimensional Drawings

2MXM40A9

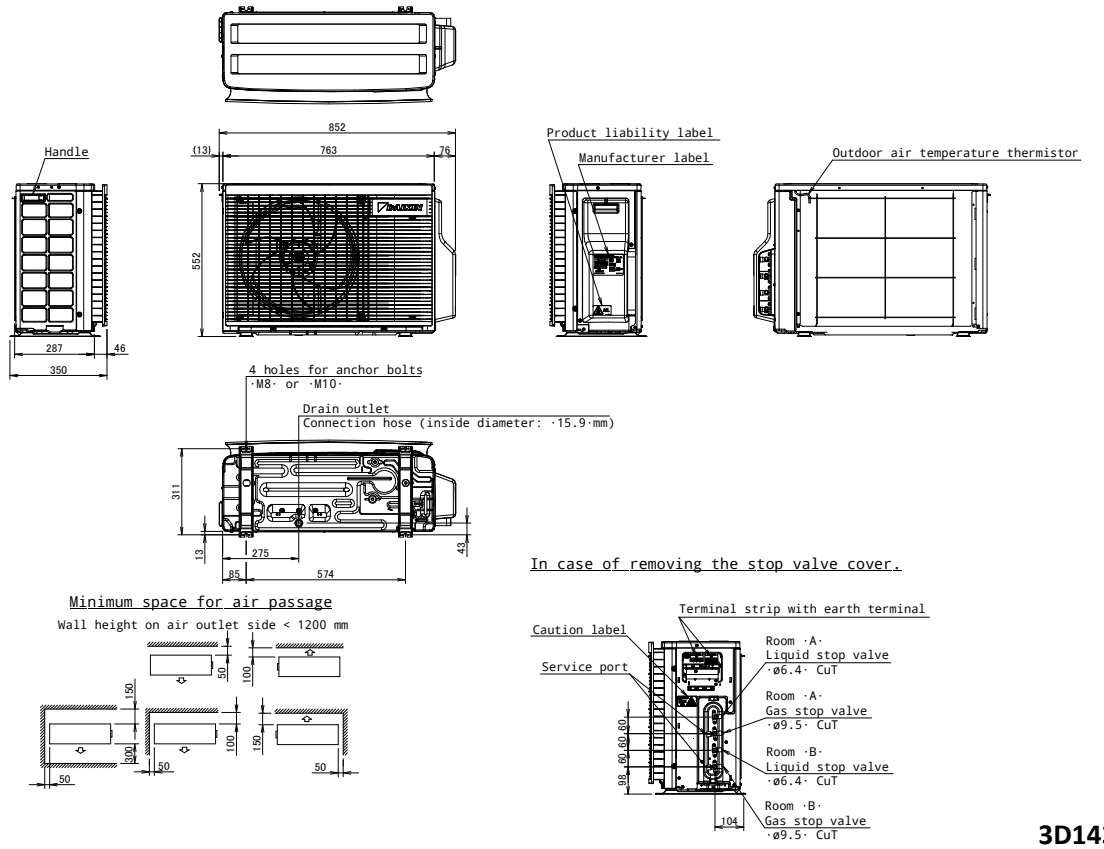

3D143687

2MXM50A9

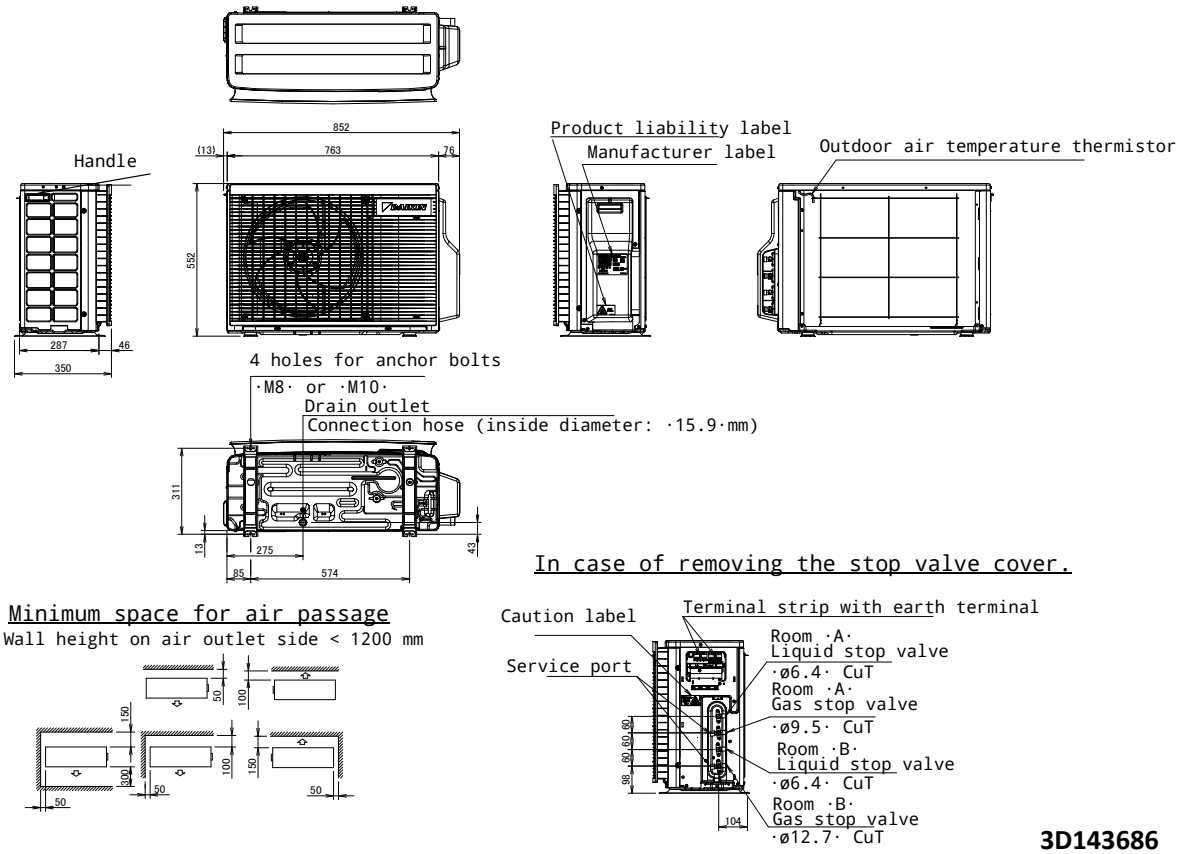

3D143686

6 Dimensional drawings

6 - 1 Dimensional Drawings

6

2MXM68A9

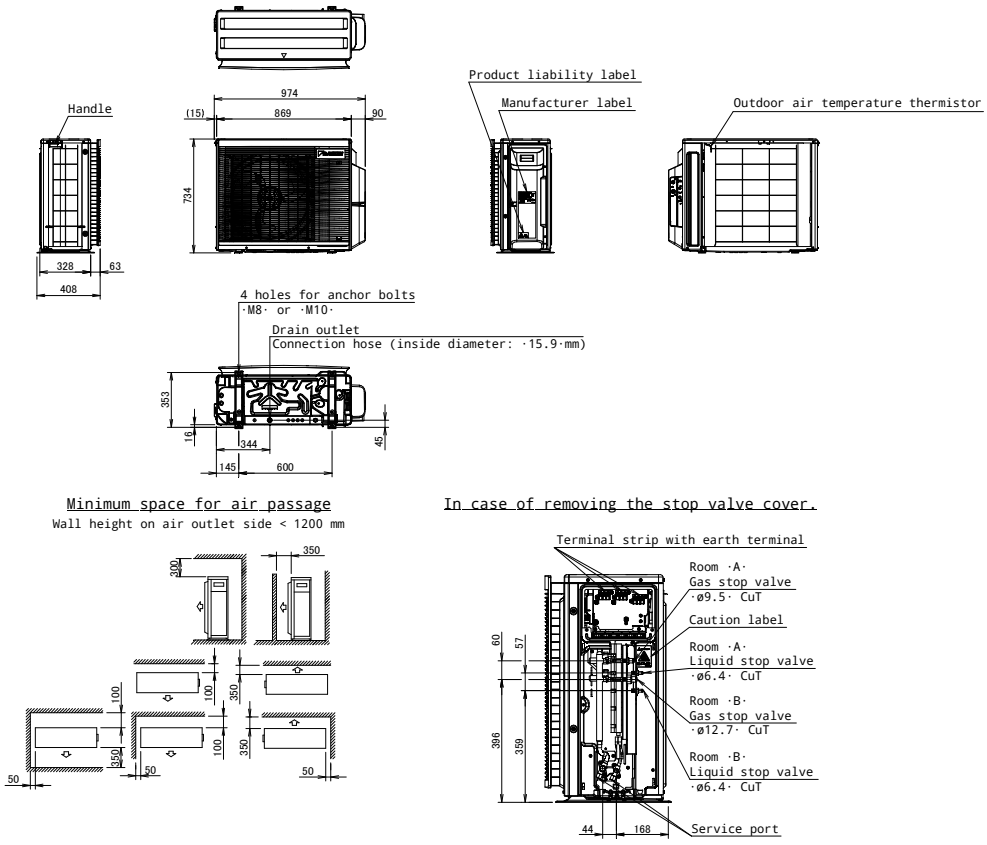

3D144277

7 Centre of gravity

7 - 1 Centre of Gravity

2MXM40A9

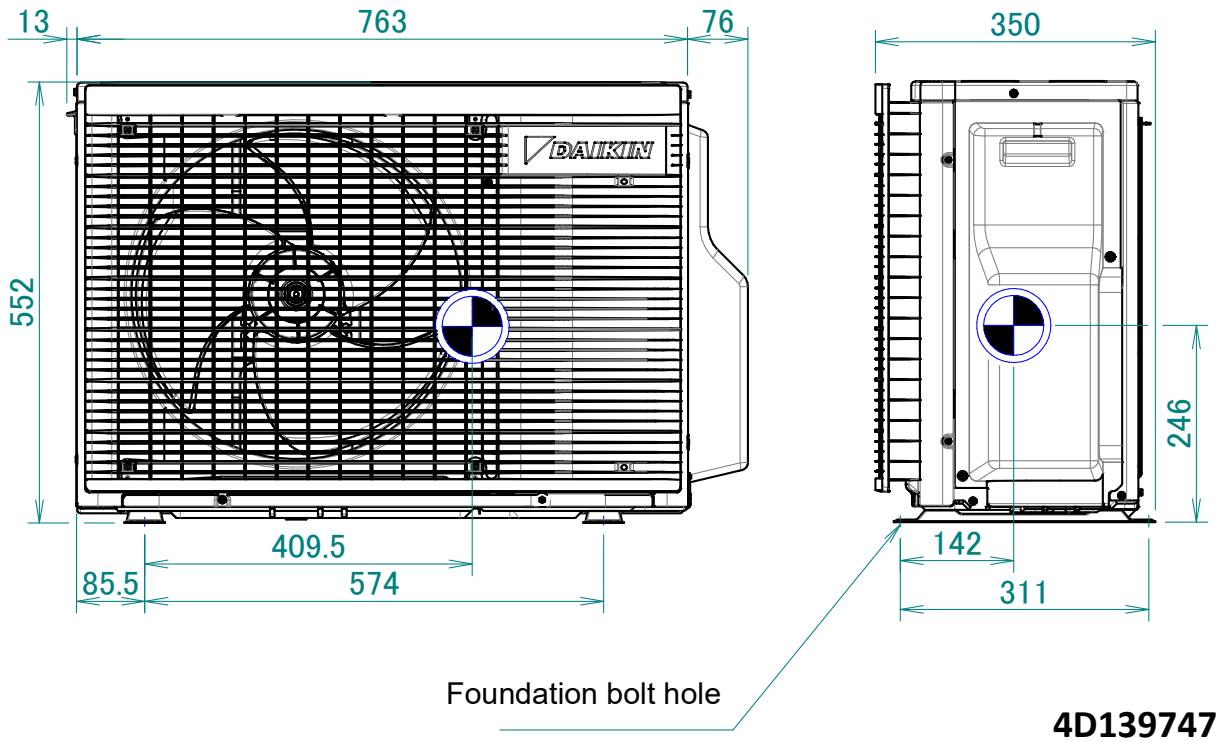

4D139747

2MXM50A9

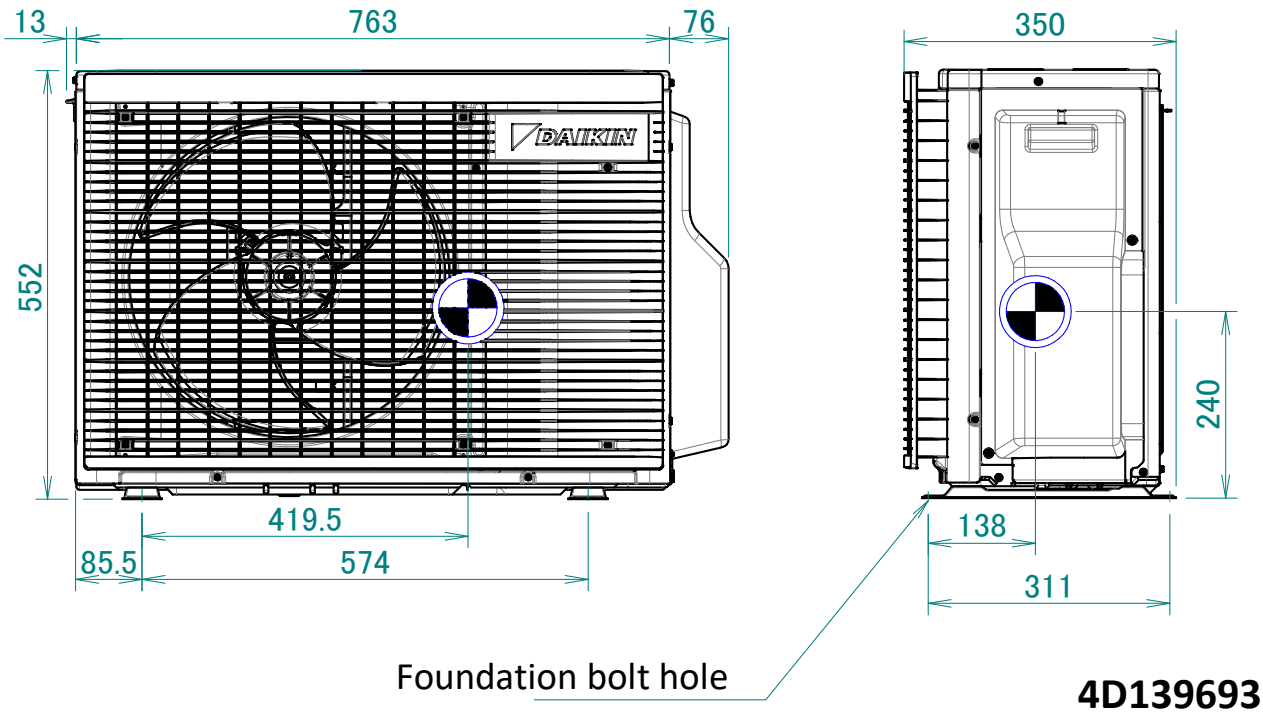

4D139693

7 Centre of gravity

7 - 1 Centre of Gravity

2MXM68A9

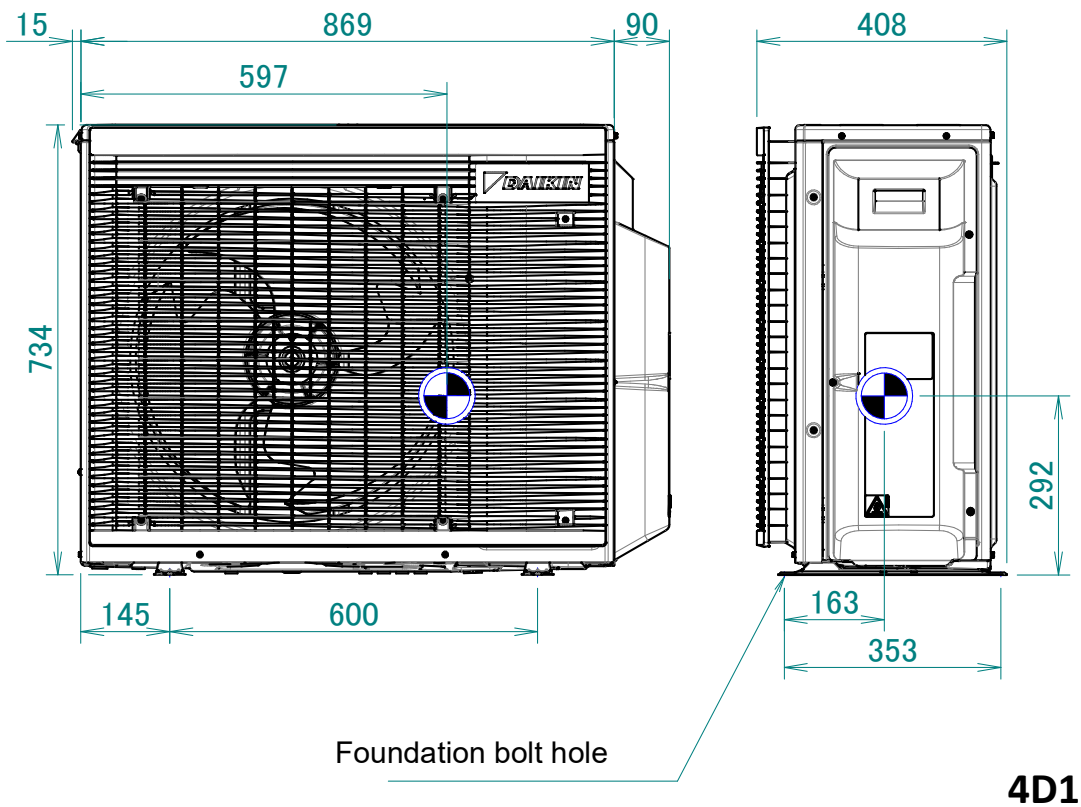

8 Piping diagrams

8 - 1 Piping Diagrams

2MXM40A9

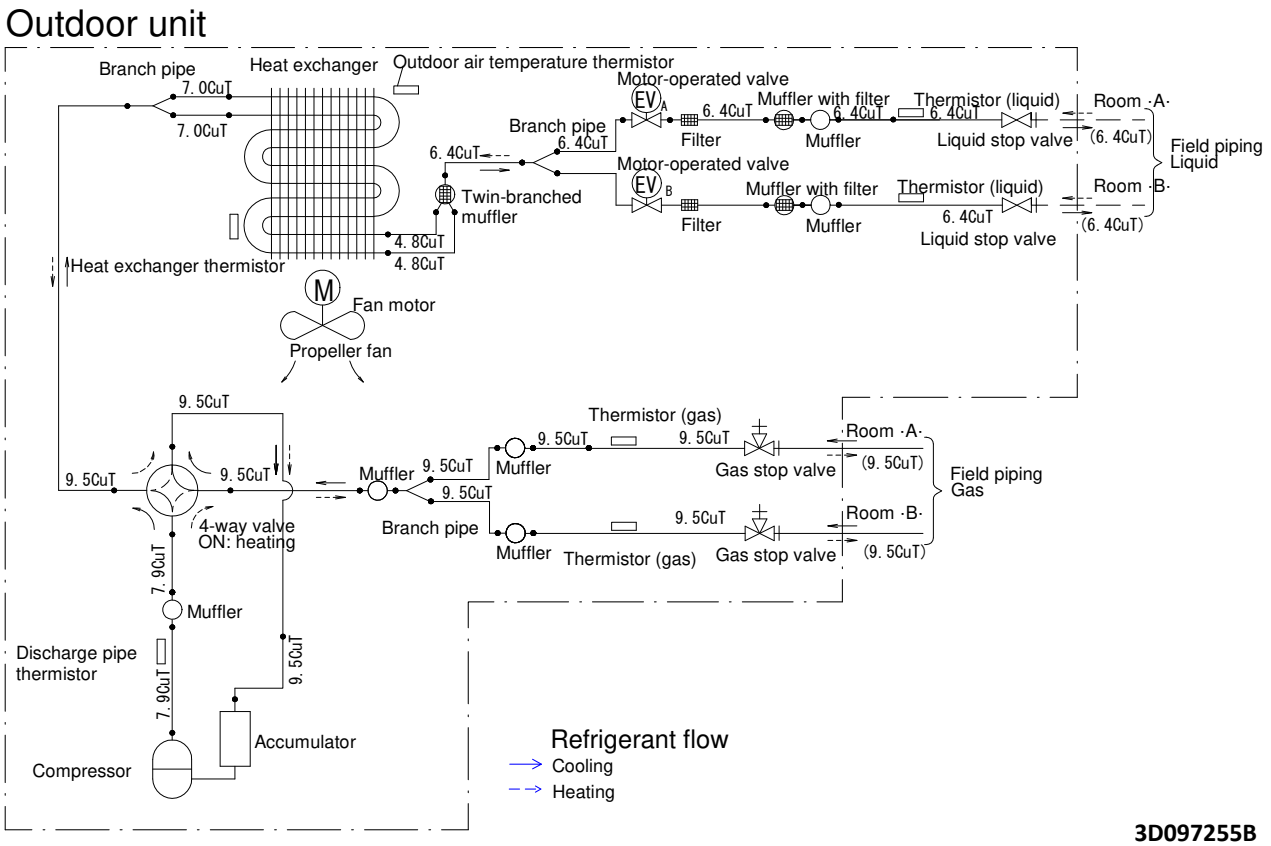

2MXM50A9

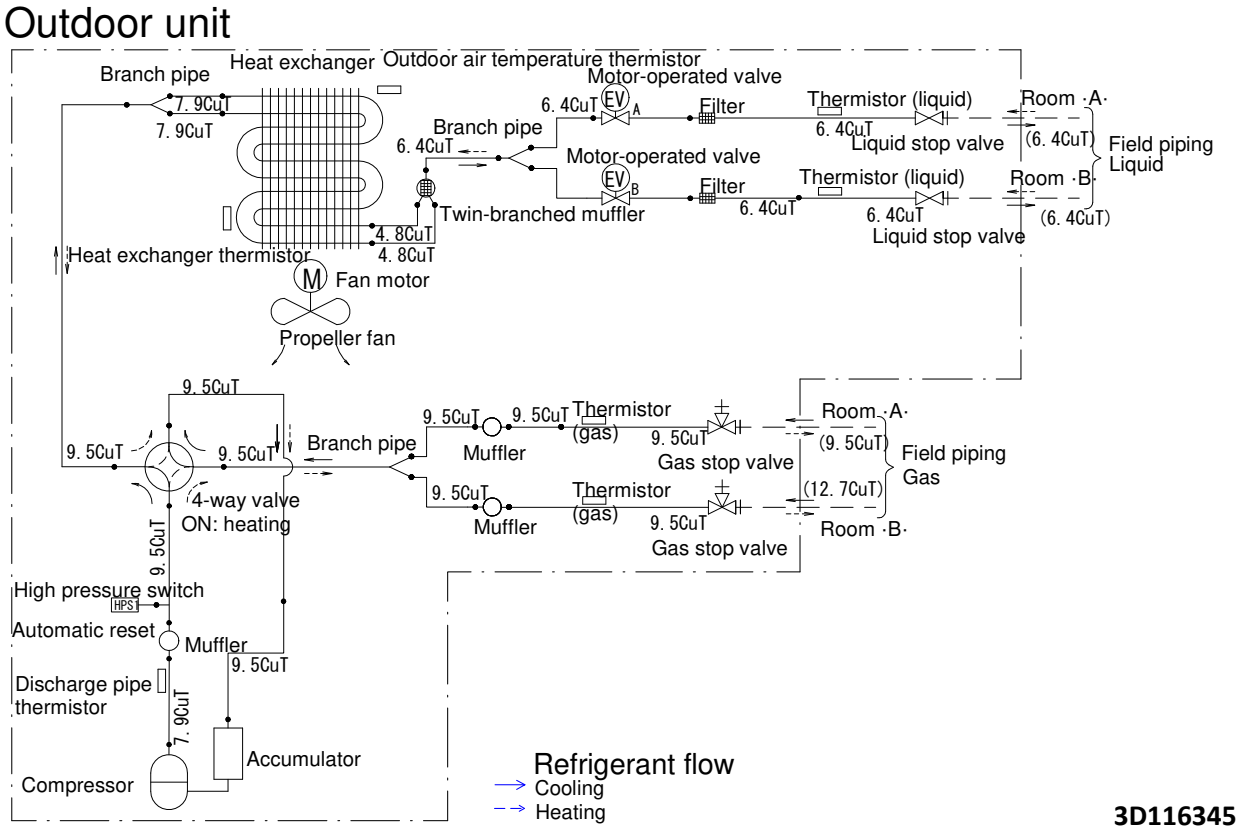

8 Piping diagrams

8 - 1 Piping Diagrams

2MXM68A9

Outdoor Unit

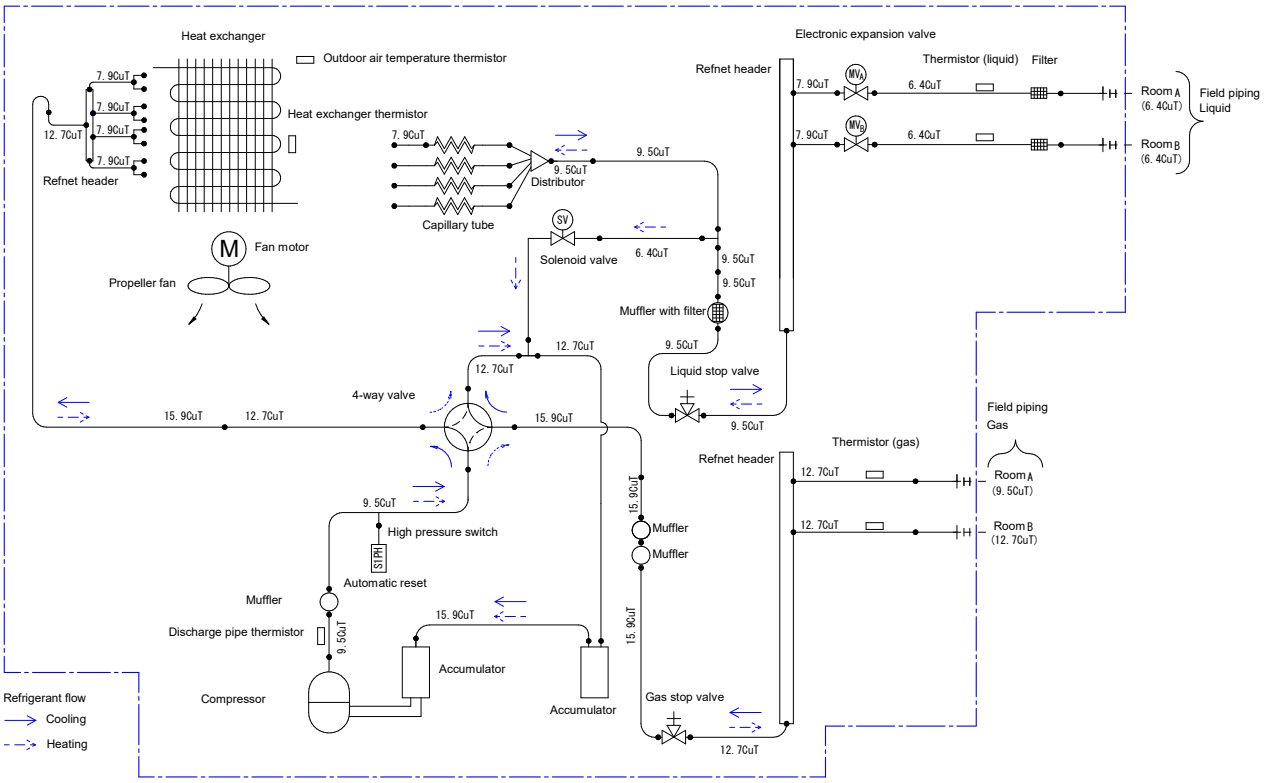

9 Wiring diagrams

9 - 1 Wiring Diagrams - Single Phase

2MXM40A9

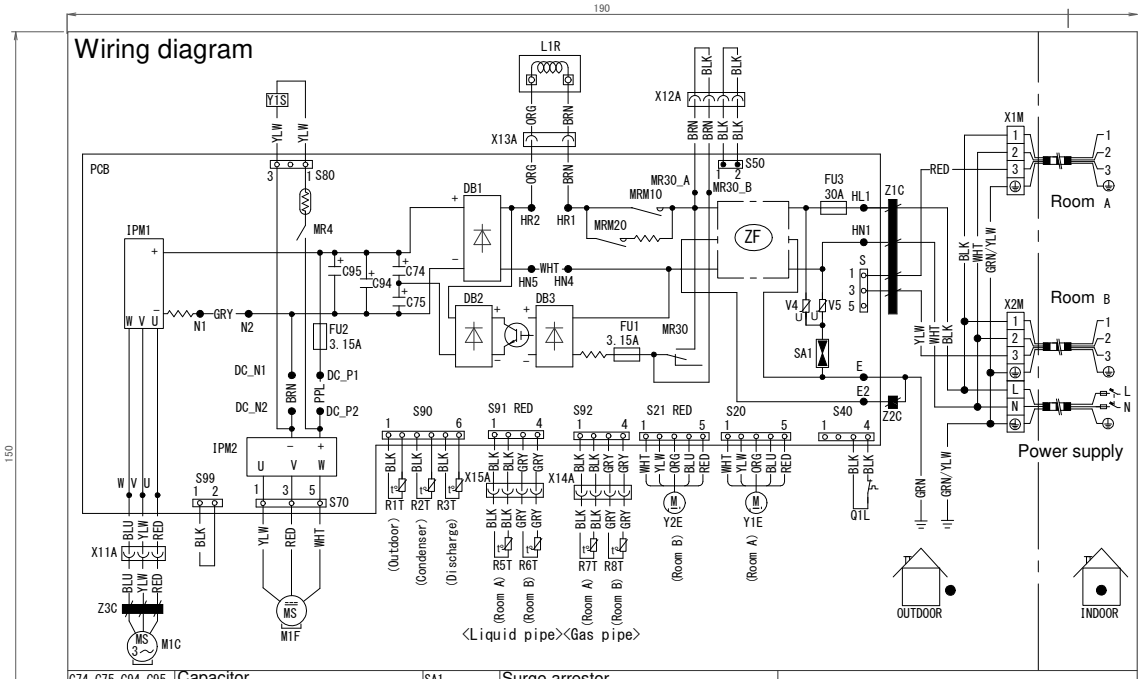

C74, C75, C94, C95	Capacitor	SA1	Surge arrestor		
DB1, DB2, DB3	Diode bridge				
FU1, FU2, FU3	Fuse	V4, V5	Varistor		
IPM1	Intelligent power module	X1M-X2M	Terminal strip with earth terminal	Field wiring	
L1R	Reactor	Y1E-Y2E	Electronic expansion valve coil	Screw terminal	
M1C	Compressor motor	Y1S	Reversing solenoid valve coil	Connector	
M1F	Fan motor	ZF	Noise filter	WHT: white	GRY: grey
MRM10, MRM20	Magnetic relay	Z1C-Z3C	Ferrite core	BLK: black	ORG: orange
MR4, MR30	Magnetic relay	S2-S502	Connector	BLU: blue	RED: red
PCB	Printed circuit board	X11A-X15A	Connector	BRN: brown	YLW: yellow
Q1L	Overload protector	S99	Heating-to-cooling changeover	GRN: green	
R1T-R8T	Thermistor			PPL: purple	

3D114689A

2MXM50A9

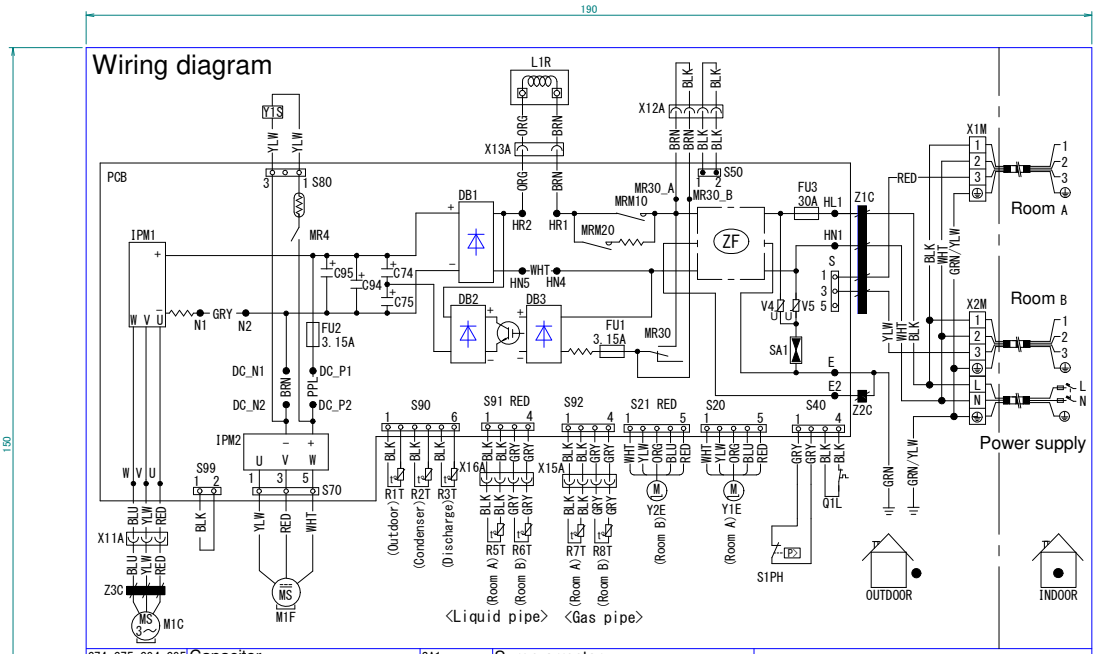

C74, C75, C94, C95	Capacitor	SA1	Surge arrestor		
DB1, DB2, DB3	Diode bridge	S1PH	High pressure switch		
FU1, FU2, FU3	Fuse	V4, V5	Varistor		
IPM1	Intelligent power module	X1M-X2M	Terminal strip with earth terminal	Field wiring	
L1R	Reactor	Y1E-Y2E	Electronic expansion valve coil	Screw terminal	
M1C	Compressor motor	Y1S	Reversing solenoid valve coil	Connector	
M1F	Fan motor	ZF	Noise filter	WHT: white	GRY: grey
MRM10, MRM20	Magnetic relay	Z1C-Z3C	Ferrite core	BLK: black	ORG: orange
MR4, MR30	Magnetic relay	S2-S502	Connector	BLU: blue	RED: red
PCB	Printed circuit board	X11A-X16A	Connector	BRN: brown	YLW: yellow
Q1L	Overload protector	S99	Heating-to-cooling changeover	GRN: green	
R1T-R8T	Thermistor			PPL: purple	

3D114690B

9 Wiring diagrams

9 - 1 Wiring Diagrams - Single Phase

2MXM68A9

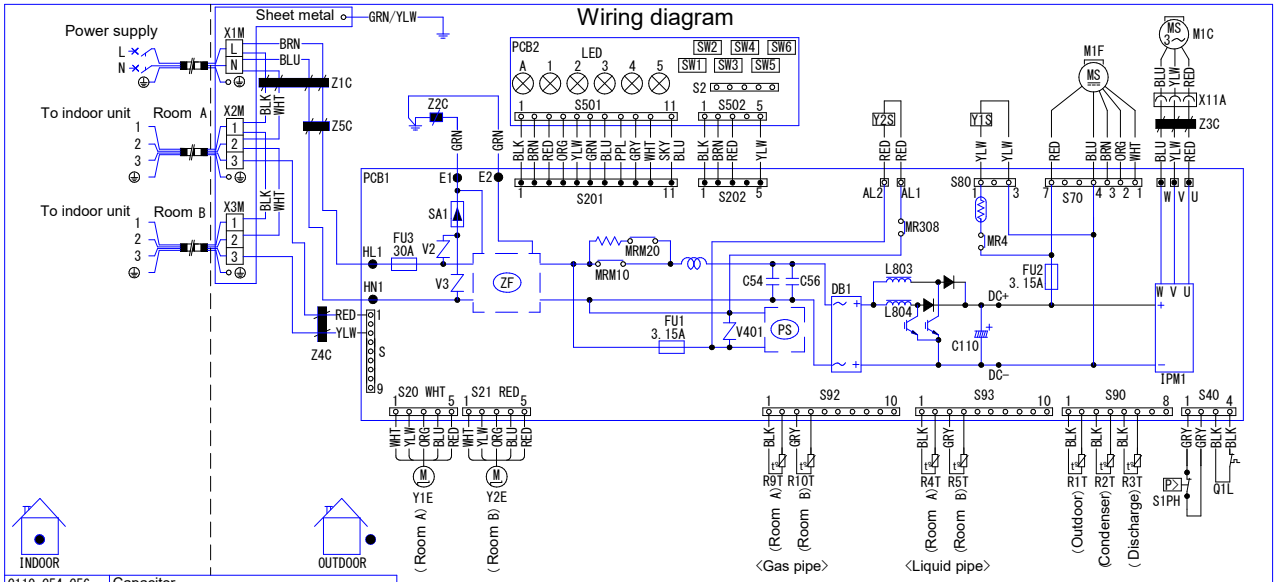

C110, C54, C56	Capacitor					
DB1	Diode bridge	Q1L	Overload protector	ZF	Noise filter	
FU1, FU2, FU3	Fuse	R1T-R10T	Thermistor	S, S2-S502	Connector	
IPM1	Intelligent power module	SA1	Surge arrester	U, V, W	Connector	
L803, L804	Reactor	S1PH	High pressure switch	X11A, AL1, AL2	Connector	
LED1-5, LEDA	Light-emitting diode	SW1-SW6	Switch		Field wiring	
M1C	Compressor motor	V2, V3, V401	Varistor		Screw terminal	
M1F	Fan motor	X1M-X3M	Terminal strip with earth terminal		Connector	
MRM10, MRM20	Magnetic relay	Y1E-Y2E	Electronic expansion valve coil	BLK: black	GRY: grey	SKY BLU: sky blue
MR4, MR308	Magnetic relay	Y1S	Reversing solenoid valve coil	BLU: blue	ORG: orange	WHT: white
PCB1, PCB2	Printed circuit board	Y2S	Solenoid valve	BRN: brown	PPL: purple	YLW: yellow
PS	Switching power supply	Z1C-Z5C	Ferrite core	GRN: green	RED: red	3D130366-1

3D130366

10 Sound data

10 - 1 Sound Pressure Spectrum

2MXM40A9

Cooling mode

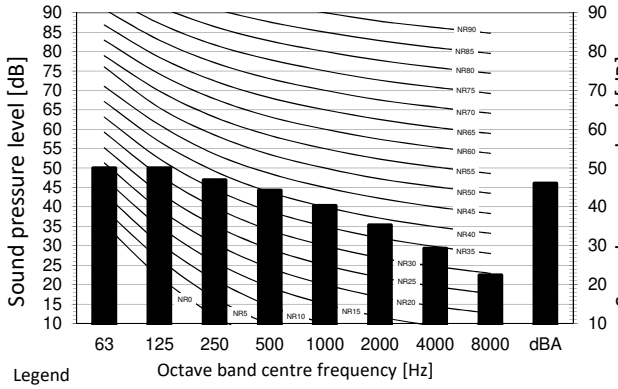

Heating mode

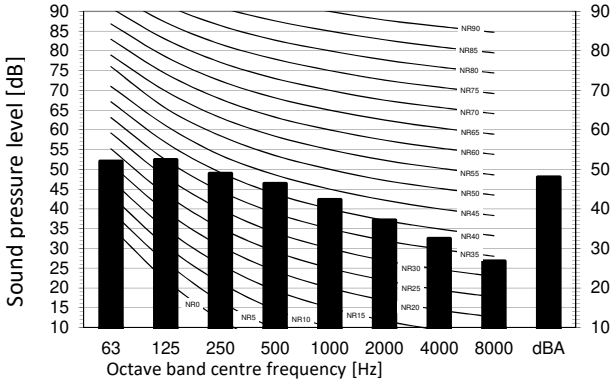

Legend

dBA = A-weighted sound pressure level (A scale according to IEC).

A Scale

B ■ Fan speed: High

Cooling Total dB

A	B
dBA	46

Heating Total dB

A	B
dBA	48

Location of microphone

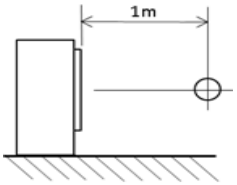

Notes

1 Background noise already taken into account.

2 Operating conditions: power source 220-240 V/220 V 50/60 Hz; JIS standard

3 Operating noise varies depending on operation and ambient conditions.

4 The operation noise measuring method is in accordance with JISC9612.

5 Measuring location: anechoic chamber

3D102207C

2MXM50A9

Cooling mode

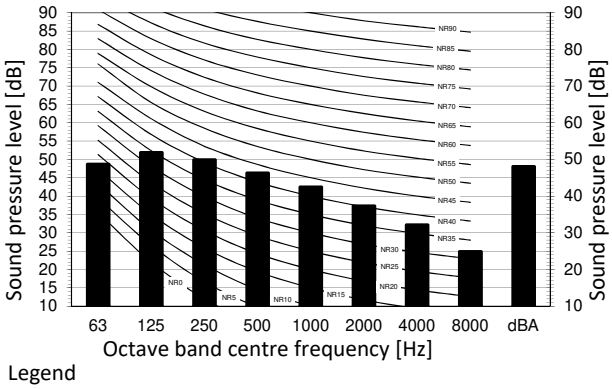

Heating mode

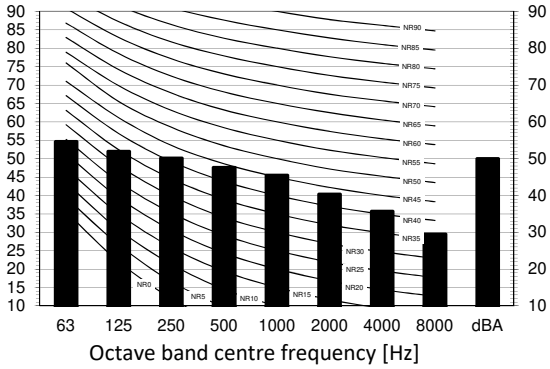

Legend

dBA = A-weighted sound pressure level (A scale according to IEC).

A Scale

B ■ Fan speed: High

Cooling Total dB

A	B
dBA	48

Heating Total dB

A	B
dBA	50

Location of microphone

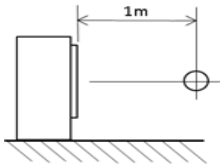

Notes

1 Background noise already taken into account.

2 Operating conditions: power source 220-240 V/220 V 50/60 Hz; JIS standard

3 Operating noise varies depending on operation and ambient conditions.

4 The operation noise measuring method is in accordance with JISC9612.

5 Measuring location: anechoic chamber

3D102208C

10 Sound data

10 - 1 Sound Pressure Spectrum

10

2MXM68A9
3MXM68A9

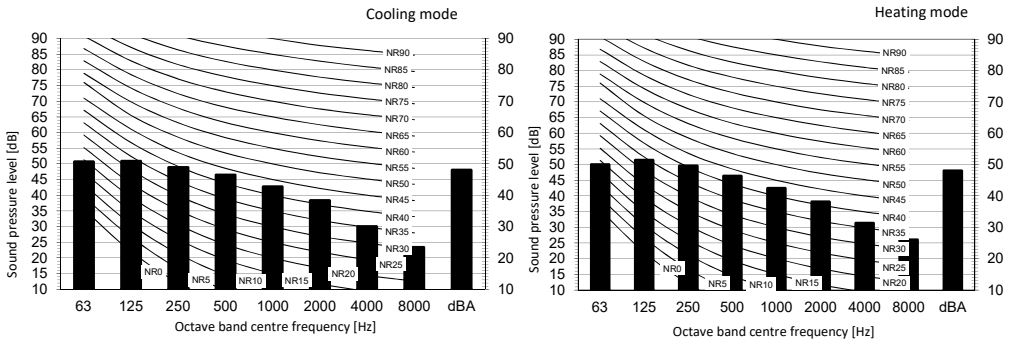

Legend

dBA = A-weighted sound pressure level (A scale according to IEC).

A Scale

B Fan speed: High

Cooling Total dB

A	B
dBA	48

Heating Total dB

A	B
dBA	49

Location of microphone

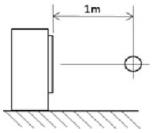

Notes

1. Operating conditions: power source 220-240 V/220 V 50/60 Hz; JIS standard
2. Background noise already taken into account.
3. Operating noise varies depending on operation and ambient conditions.
4. The operation noise measuring method is in accordance with JISC9612.
5. Measuring location: anechoic chamber

3D106223B

11 Operation range

11 - 1 Operation Range

2MXM-A9
3MXM-A9
4MXM-A9
5MXM-A9

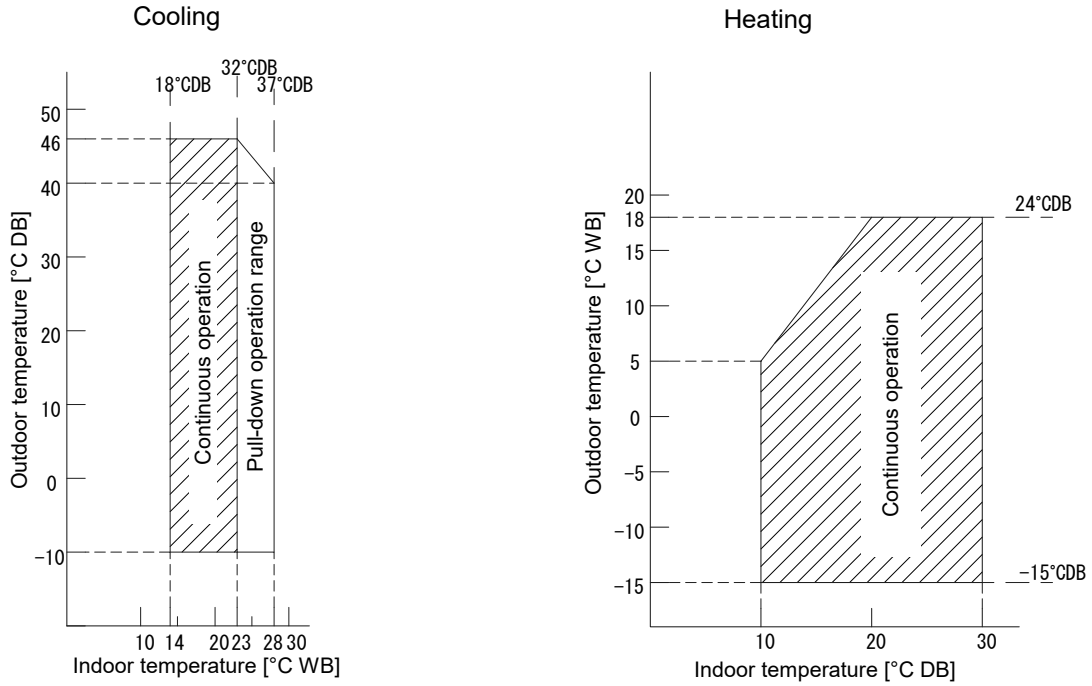

Notes
1. The ·graph· is based on the following conditions.
   Corresponding refrigerant piping length: ·5· m
   Level difference: ·0·m
   Air flow rate High

3D101376D

Daikin Europe N.V. Naamloze Vennootschap · Zandvoordestraat 300 · 8400 Oostende · Belgium · www.daikin.eu · BE 0412 120 336 · RPR Oostende (Responsible Editor)

Daikin Europe N.V. participates in the ECP programmes for Fan Coil Units and Variable Refrigerant Flow systems. Daikin Applied Europe S.p.A. participates in the ECP programmes for Liquid Chilling Packages and Hydronic Heat Pumps. Check ongoing validity of certificate: www.eurovent-certification.com

EEDEN23 02/2023

The present leaflet is drawn up by way of information only and does not constitute an offer binding upon Daikin Europe N.V.. Daikin Europe N.V. has compiled the content of this leaflet to the best of its knowledge. No express or implied warranty is given for the completeness, accuracy, reliability or fitness for particular purpose of its content and the products and services presented therein. Specifications are subject to change without prior notice. Daikin Europe N.V. explicitly rejects any liability for any direct or indirect damage, in the broadest sense, arising from or related to the use and/or interpretation of this leaflet. All content is copyrighted by Daikin Europe N.V.