TYPE B01A

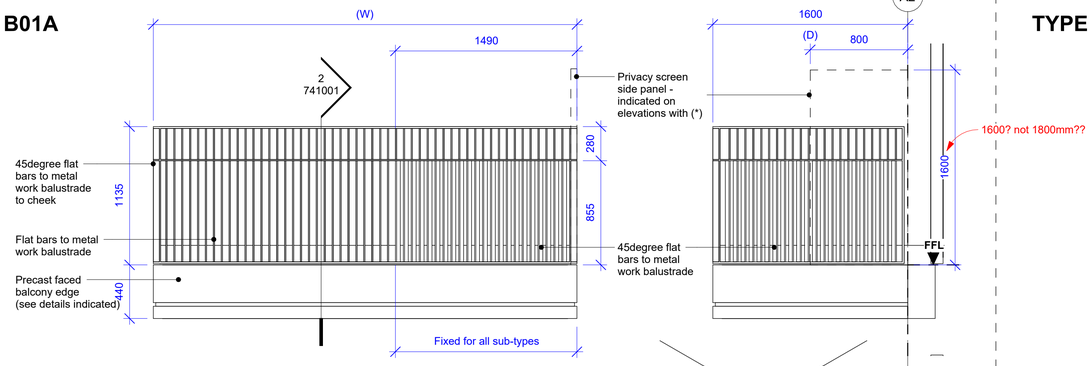

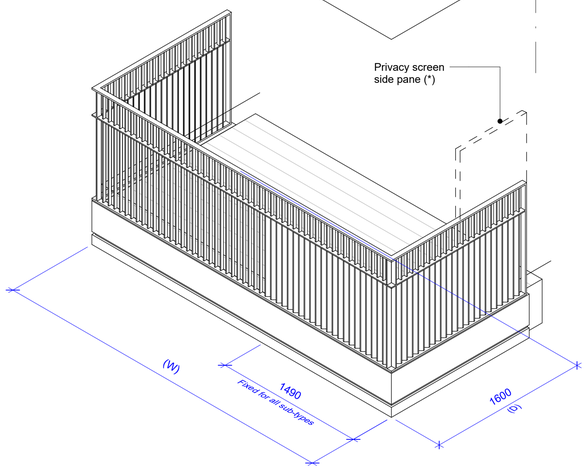

Projecting Balcony - Type B01A

Balcony Type	Width (W)	Depth (D)	Count
B01A_2P	3477.5	1600	2
B01A_3P	4040	1600	1
B01A_4P	4715	1600	4
B01A_5P	5277.5	1600	7
B01A_5P(*)	5277.5	1600	11
B01A_6P	5952.5	1600	2

TYPE B01B

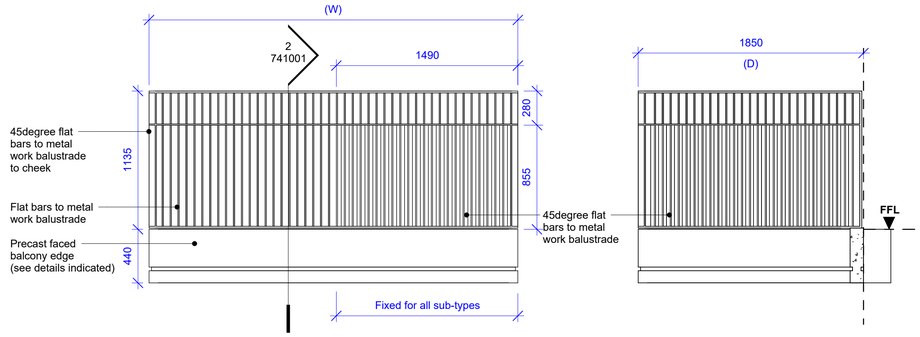

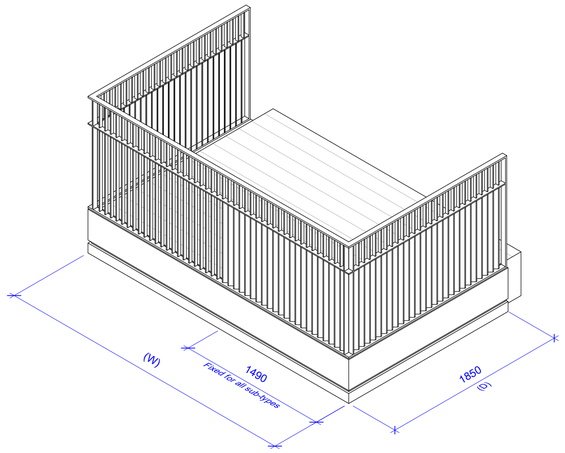

Projecting Balcony - Type B01B

Balcony Type	Width (W)	Depth (D)	Count
B01B_2P	3027.5	1850	8
B01B_4P	4040	1850	2
B01B_5P	4602.5	1850	2
B01B_6P	5052.5	1850	4
B01B_7P	5727.5	1850	1

TYPE B02A

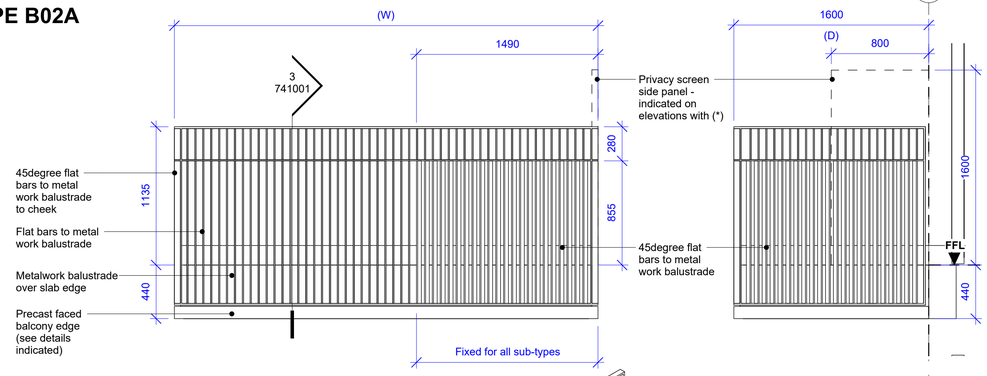

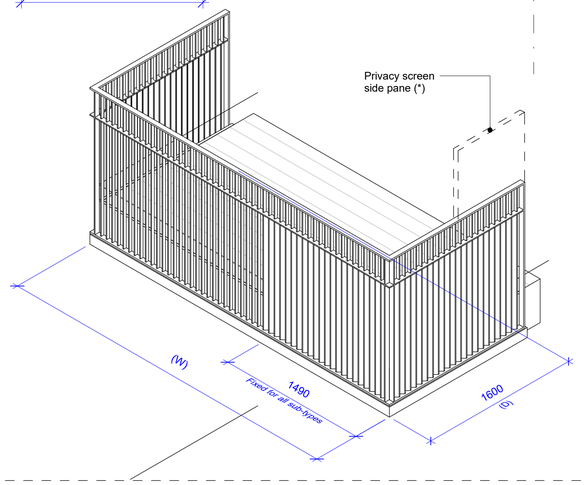

Projecting Balcony - Type B02A

Balcony Type	Width (W)	Depth (D)	Count
B02A_2P	3477.5	1600	6
B02A_3P	4040	1600	2
B02A_3P(*)	4040	1600	1
B02A_4P	4715	1600	15
B02A_4P(*)	4715	1600	1
B02A_5P	5277.5	1600	15
B02A_5P(*)	5277.5	1600	7
B02A_6P	5952.5	1600	2
B02A_6P(*)	5952.5	1600	3

TYPE B02B

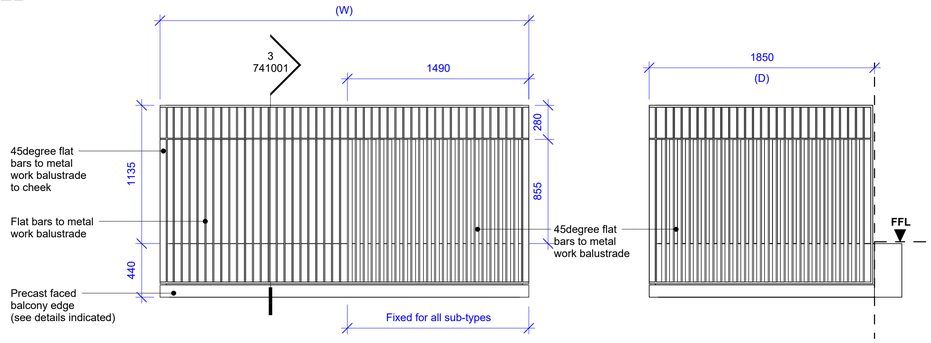

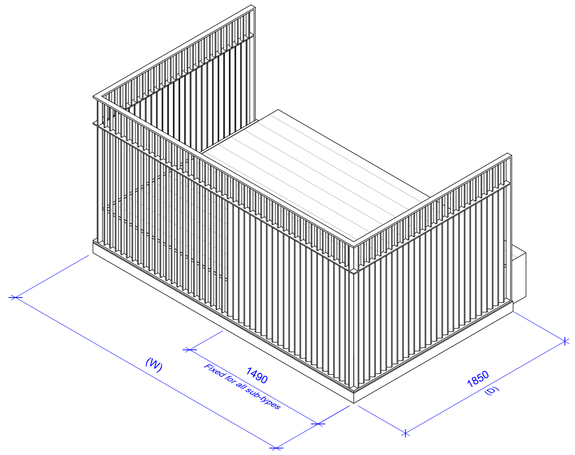

Projecting Balcony - Type B02B

Balcony Type	Width (W)	Depth (D)	Count
B02B_2P	3027.5	1850	9
B02B_3P	3477.5	1850	1
B02B_4P	4040	1850	3
B02B_5P	4602.5	1850	3
B02B_6P	5165	1850	5
B02B_7P	5727.5	1850	1

Notes

1. Do not scale this drawing.
2. All dimensions must be checked on site and any discrepancies verified with the architect.
3. Unless shown otherwise, all dimensions are to structural surfaces.
4. Drawing to be read with all other issued information. Any discrepancies to be brought to the attention of the architect.
5. This drawing is the copyright of Levitt Bernstein and may not be copied, altered or reproduced in any form, or passed to a third party without license or written consent.
6. This document is prepared for the sole use of Formation D&B and no liability to any other persons is accepted by Levitt Bernstein. Levitt Bernstein accepts no liability for use of this drawing by parties other than the party for whom it was prepared or for purposes other than those for which it was prepared.

This is not a construction drawing, it is unsuitable for the purpose of construction and must on no account be used as such.

Balcony Types Legend

- Refer to wall types and elevational drawings for reference to finishing materials, RAL colours and bonds.

Rev	Date	Description	Drawn / Checked
P1	14/07/23	First Issue	OB

Project name

Ashley Road Depot
Tottenham Hale

Drawing number: 3742B - LB - XX - XX - D - A - 460000
Rev: **P1**

Drawing: Balcony Types 01

Purpose of issue: Stage 4A

Scale: As indicated @ A1
Date: 04/05/22

Client: Formation D&B

Levitt Bernstein
levittbernstein.co.uk

London
Thane Studios
2-4 Thane Villas
London N7 7PA
+44 (0)20 7275 7676

Manchester
Bonded Warehouse
18 Lower Byrom Street
Manchester M3 4AP
+44 (0)161 669 8740