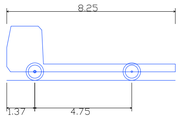

DAF LF 230 4x2 (19T)

Overall Length	8.250m
Overall Width	2.500m
Overall Body Height	2.652m
Min Body Ground Clearance	0.419m
Track Width	2.450m
Lock to lock time	6.00s
Kerb to Kerb Turning Radius	9.000m

KEY TO VEHICLE ENVELOPES

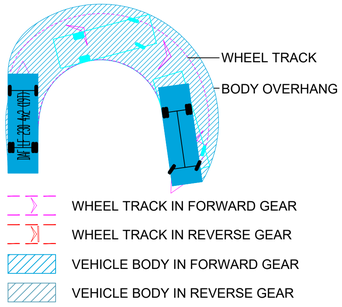

NOTE:

DRAWING BASED ON OS MAPPING.
ALL MEASUREMENTS TO BE
VERIFIED ON SITE

1:350 @ A1
0 2m 5m 10m 15m 20m 25m 30m

1:200 @ A1
0 1m 5m 10m 20m

APPROACH FROM THE NORTHEAST, TRAVEL TO SITE & REVERSE IN. EXIT IN FORWARD GEAR NORTHEAST BOUND

SCALE 1:350

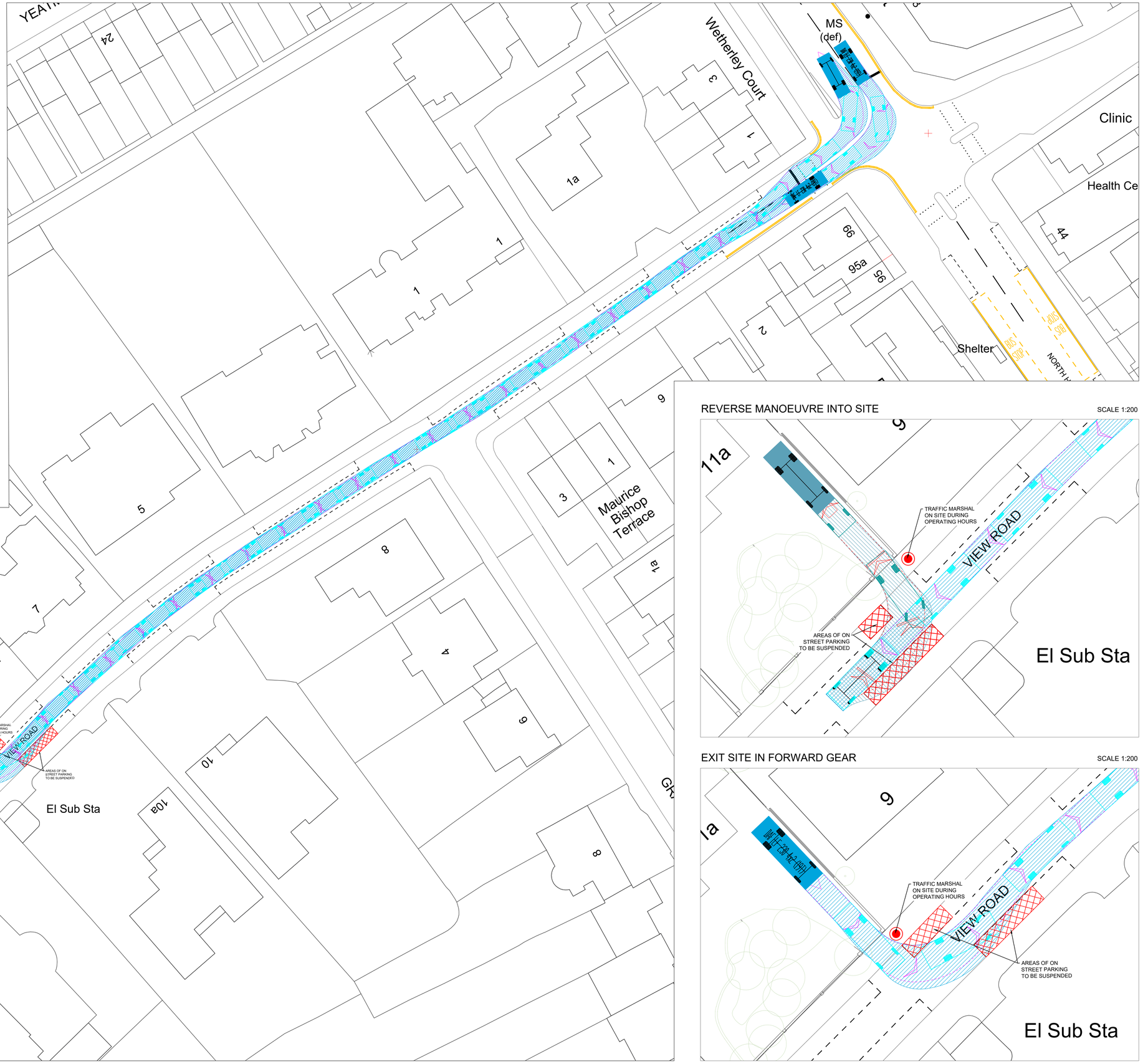

REVERSE MANOEUVRE INTO SITE

SCALE 1:200

EXIT SITE IN FORWARD GEAR

SCALE 1:200

HIGHWAY DESIGN LTD

CLIENT:
BJC CONSTRUCTION PROJECTS LTD

PROJECT:
11 VIEW ROAD
HIGHGATE,
LONDON N6 4DJ

TITLE:
SWEPT PATH ANALYSIS - 8.2M 4X2 FLATBED

DESCRIPTION:
APPROACHING FROM N.E. AND EXITING TO THE N.E.

STATUS:
PLANNING

DATE: 10.04.24	DRAWN BY: JG
JOB NO: JG.00724	SCALE: AS SHOWN @ A1
REV: -	DRAWING NO: JG02

NOTES

1. This drawing and any ancillary drawings or data are copyright of JG Highway Design Ltd, and may not be used, copied, or amended for any purpose whatsoever without written approval.
2. This drawing is only to be used for the purposes described in the status box above.
3. All dimensions and levels to be checked on site by the contractor before commencement of any work.
4. If in doubt, ask.
5. This drawing is to be read in conjunction with all other drawings, details and specifications pertaining to the work described. It should only be used for the purpose marked in the status box above and shall not be used for construction unless clearly marked CONSTRUCTION.
6. Materials and workmanship shall comply to the appropriate British Standards and Codes of Practice unless otherwise stated.
7. The activities required to construct the work, shown on drawings clearly marked CONSTRUCTION, may be subject to the provisions of the Construction (Design & Management) Regulations 2015. The Contractor and Client must ensure that they are adequately conversant with these regulations and that the appropriate procedures required under the regulations are always observed.
8. Swept path analysis: When generic vehicles are used for swept path analysis, they may differ from specific makes and models of that type. Driver ability can vary hugely. What one driver is capable of, another may not be so any analysis shown to be tight on space will come down driver ability and the difference between make and models of vehicles.
9. UTILITIES NOTE: The position of any existing public or private sewers, utility services, plant or apparatus shown on this drawing is believed to be correct, but no warranty to this is expressed or implied. Other such plant or apparatus may also be present but not shown. The Contractor is therefore advised to undertake his own investigation where the presence of any existing sewers, services, plant, or apparatus may affect his operations
10. Printed drawings not valid in black and white.

REVISIONS